SaleXun

REVISIONS					
REV.	ECN NO.	LOCATION	DESCRIPTION	DATE	DESIGN
A0	N/A0		INITIAL RELEASE		

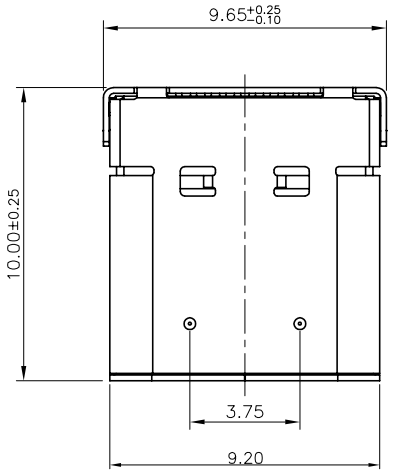

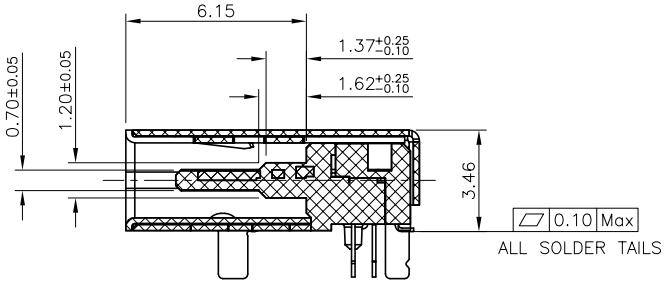

Section A–A

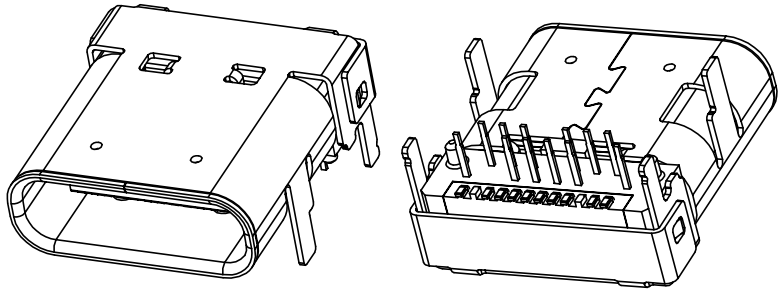

3D VIEW

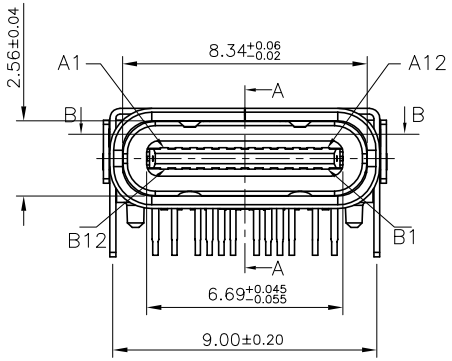

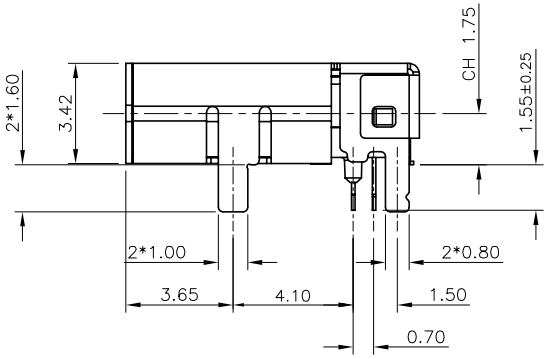

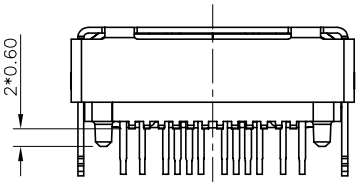

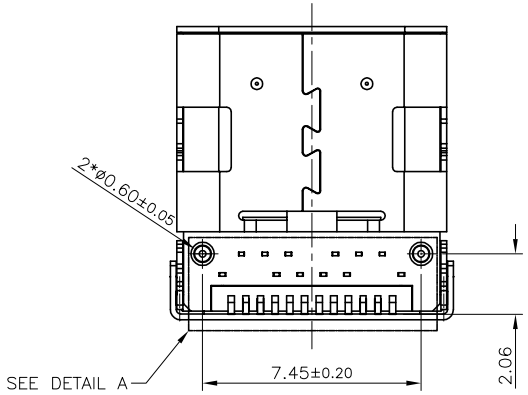

1.MATERIAL:
- MOLDING: LCP UL94 V–0;
- CONTACT: COPPER ALLOY;
  PLATED GOLD ON CANTACT AREA,
  GOLD ON SOLDER AREA,
  50u" NICKEL PLATING OVER ALL;
- SHELL: SUS304–H,T=0.30±0.03mm;
  50u" NICKEL PLATING OVER ALL;
- EMI SHILD: SUS304–H,T=0.12±0.03mm;
- LATCH: SUS301–H,T=0.15±0.03mm;

2.MECHANICAL:
- INSERTION: 5~20N;
- EXTRACTION: 8~20N;
- DURABILITY: 10,000 CYCLES;

3.ELECTRICAL:
- CURRENT: 5A MIN FOR VBUS;
  0.25A MIN FOR OTHER.
- VOLTAGE: 5VAC Max;
- WITHSTANDING VOLTAGE: 100V AC;
- CONTACT RESISTANCE: 40mΩ Max;
- INSULATION RESISTANCE: 100MΩ MIN;

4.ENVIRONMENTAL
- TEMPERATURE RANGE: –25°C ~ +85°C;

5.BE MAINTAINED FOR 10 SECONDS AT 260±5°C;

6.SOLDERING PROCESS:REFLOW SOLDERING.

This document is the property of SaleXun development corporation.

Unless Otherwise specified, Tolerance:
X. ±0.30
X.x ±0.20
X.xx ±0.15
X.xxx ±0.10
ANGLES ±3°
Tel:0769–82889209

DongGuan SaleXun Electronics Co., Ltd.

DESIGN:	DATE:	TITLE: USB4(40GB) TYPE C 24P; Double-shell design on the board; DIP+SMT TYPE;		
CHECKED:	DATE:			
APPROVED:	DATE:			
PART NO.:UTC–025D–24P–L10.0&L1.55		REV.: A0	SCALE: 1:1	UNIT: mm
DRAWING NO.: C–UTC–025D–24P–05		SIZE: A4	SHEET: 1/2	

SaleXun

SaleXun

REVISIONS					
REV.	ECN NO.	LOCATION	DESCRIPTION	DATE	DESIGN
A0	N/A0		INITIAL RELEASE		

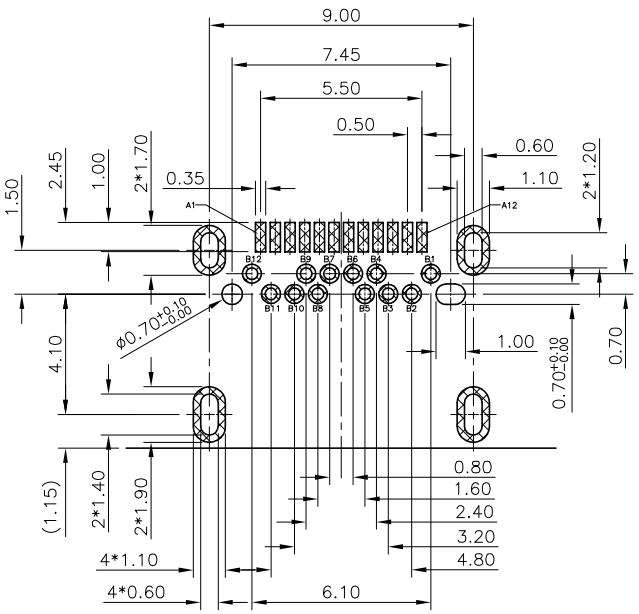

RECOMMEND P.C.B LAYOUT(COMPONENT SIDE)
TOLERANCE FOR PCB LAYOUT IS ± 0.05

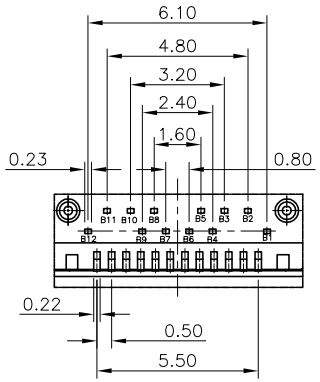

Detail A

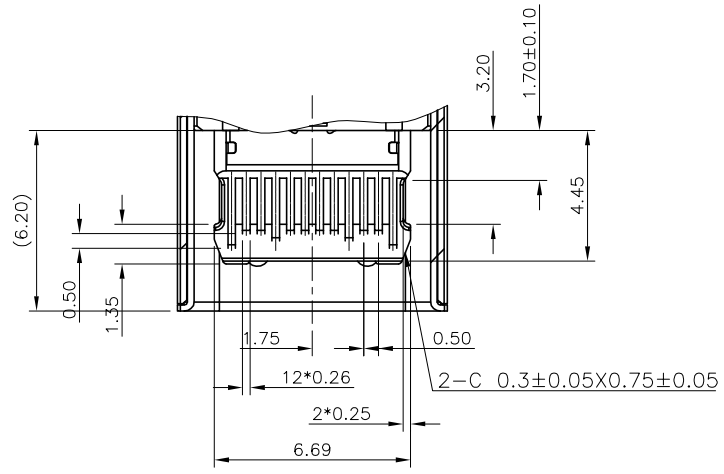

SECTION B-B

USB TYPE-C FULL-FEATURED RECEPTACLE INTERFACE PIN ASSIGNMENTS :

PIN	Signal Name	Description	PIN	Signal Name	Description
A1	GND	Ground return	B12	GND	Ground return
A2	SSTXp1	Positive half of first SuperSpeed TX differential pair	B11	SSRXp1	Positive half of first SuperSpeed RX differential pair
A3	SSTXn1	Negative half of first SuperSpeed TX differential pair	B10	SSRXn1	Negative half of first SuperSpeed RX differential pair
A4	VBUS	Bus Power	B9	VBUS	Bus Power
A5	CC1	Configuration Channel	B8	SBU2	Sideband Use (SBU)
A6	Dp1	Positive half of the USB 2.0 differential pair-Position 1	B7	Dn2	Negative half of the USB 2.0 differential pair-Position 2
A7	Dn1	Negative half of the USB 2.0 differential pair-Position 1	B6	Dp2	Positive half of the USB 2.0 differential pair-Position 2
A8	SBU1	Sideband Use(SBU)	B5	CC2	Configuraation Channel
A9	VBUS	Bus Power	B4	VBUS	Bus Power
A10	SSRXn2	Negative half of second SuperSpeed RX differential pair	B3	SSTXn2	Negative half of second SuperSpeed TX differential pair
A11	SSRXp2	Positive half of second SuperSpeed RX differential pair	B2	SSTXp2	Positive half of second SuperSpeed TX differential pair
A12	GND	Ground return	B1	GND	Ground return

This document is the property of SaleXun development corporation.

Unless Otherwise specified, Tolerance:
X. ±0.30
X.x ±0.20
X.xx ±0.15
X.xxx ±0.10
ANGLES ±3°
Tel:0769-82889209

DongGuan SaleXun Electronics Co., Ltd.

DESIGN:	DATE:	TITLE: USB4(40GB) TYPE C 24P; Double-shell design on the board; DIP+SMT TYPE;		
CHECKED:	DATE:			
APPROVED:	DATE:			
PART NO.:UTC-025D-24P-L10.0&L1.55		REV.: A0	SCALE: 1:1	UNIT: mm
DRAWING NO.: C-UTC-025D-24P-05		SIZE: A4	SHEET: 2/2	

SaleXun