SICPT20120Y-BP

Silicon Carbide Schottky Diode

Features

- 1.2kV Schottky Rectifer
- Zero Reverse Recovery Current
- High-Frequency Operation
- Temperature-Independent Switching
- Extremely Fast Switching
- Positive Temperature Coeffcient on V_F
- Increased Creepage/Clearance Distance

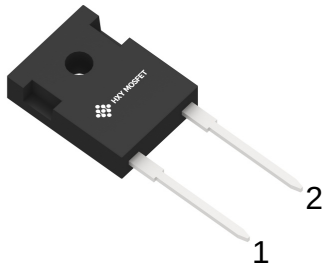

TO-247-2L

Benefits

- Replace Bipolar with Unipolar Rectifiers
- Essentially No Switching Losses
- Higher Efficiency
- Reduction of Heat Sink Requirements
- Parallel Devices Without Thermal Runaway

Applications

- Switch Mode Power Supplies (SMPS)
- Boost diodes in PFC or DC/DC stages
- Free Wheeling Diodes in Inverter stages
- AC/DC converters



Part Number	Package	Qty(PCS)
SICPT20120Y-BP	TO-247-2L	30

Maximum Ratings (T_C=25°C unless otherwise specified)

Symbol	Parameter	Value	Unit	Test Conditions	Note
V_{RRM}	Repetitive Peak Reverse Voltage	1200	V		
V_{RSM}	Surge Peak Reverse Voltage	1300	V		
V_R	DC Peak Reverse Voltage	1200	V		
I_F	Continuous Forward Current	54 26 20	A	T_C=25˚C T_C=135˚C T_C=156˚C	Fig. 3
I_{FRM}	Repetitive Peak Forward Surge Current	86 56	A	T_C=25˚C, t_P=10 ms, Half Sine Pulse T_C=110˚C, t_P=10 ms, Half Sine Pulse	
I_{FSM}	Non-Repetitive Forward Surge Current	130 104	A	T_C=25˚C, t_P=10 ms, Half Sine Pulse T_C=110˚C, t_P=10 ms, Half Sine Pulse	Fig. 8
$I_{F,Max}$	Non-Repetitive Peak Forward Current	1150 950	A	T_C=25˚C, t_P=10 ms, Pulse T_C=110˚C, t_P=10 ms, Pulse	Fig. 8
P_{tot}	Power Dissipation	246 106.5	W	T_C=25˚C T_C=110˚C	Fig. 4
dV/dt	Diode dV/dt ruggedness	200	V/ns	V_R=0-960V	
$\int i^2dt$	i^2t value	84.5 54	A^2s	T_C=25˚C, t_P=10 ms T_C=110˚C, t_P=10 ms	
T_J , T_{stg}	Operating Junction and Storage Temperature	-55 to +175	˚C		
	TO-247 Mounting Torque	1 8.8	Nm lbf-in	M3 Screw 6-32 Screw	

Electrical Characteristics

Symbol	Parameter	Typ.	Max.	Unit	Test Conditions	Note
V_F	Forward Voltage	1.5 2.2	1.8 3	V	I_F = 20 A T_J=25°C I_F = 20 A T_J=175°C	Fig. 1
I_R	Reverse Current	35 65	200 400	μA	V_R = 1200 V T_J=25°C V_R = 1200 V T_J=175°C	Fig. 2
Q_C	Total Capacitive Charge	99		nC	V_R = 800 V, I_F = 20A di/dt = 200 A/μs T_J = 25°C	Fig. 5
C	Total Capacitance	1500 93 67		pF	V_R = 0 V, T_J = 25°C, f = 1 MHz V_R = 400 V, T_J = 25°C, f = 1 MHz V_R = 800 V, T_J = 25°C, f = 1 MHz	Fig. 6
E_C	Capacitance Stored Energy	28		μJ	V_R = 800 V	Fig. 7

Note: This is a majority carrier diode, so there is no reverse recovery charge.

Thermal Characteristics

Symbol	Parameter	Typ.	Unit	Note
$R_{\theta JC}$	Thermal Resistance from Junction to Case	0.61	°C/W	Fig. 9

Typical Performance

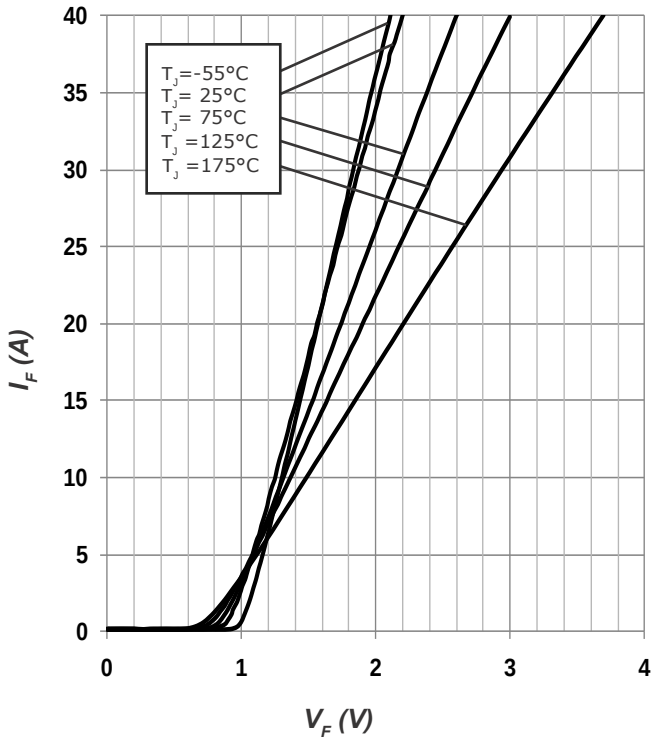

Figure 1. Forward Characteristics

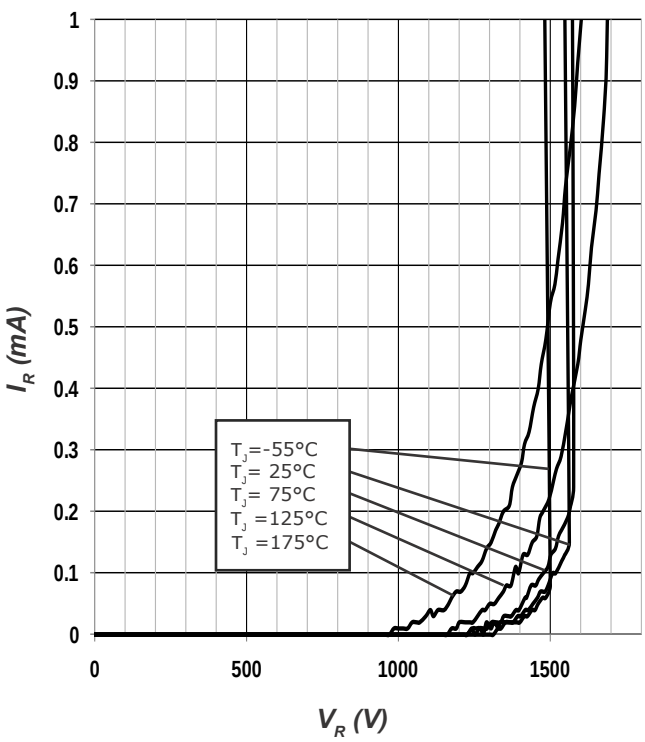

Figure 2. Reverse Characteristics

Typical Performance

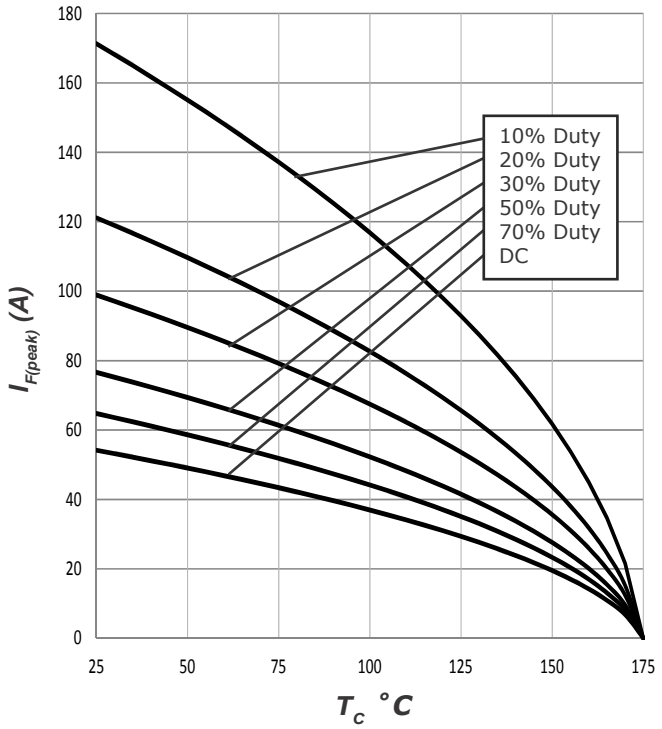

Figure 3. Current Derating

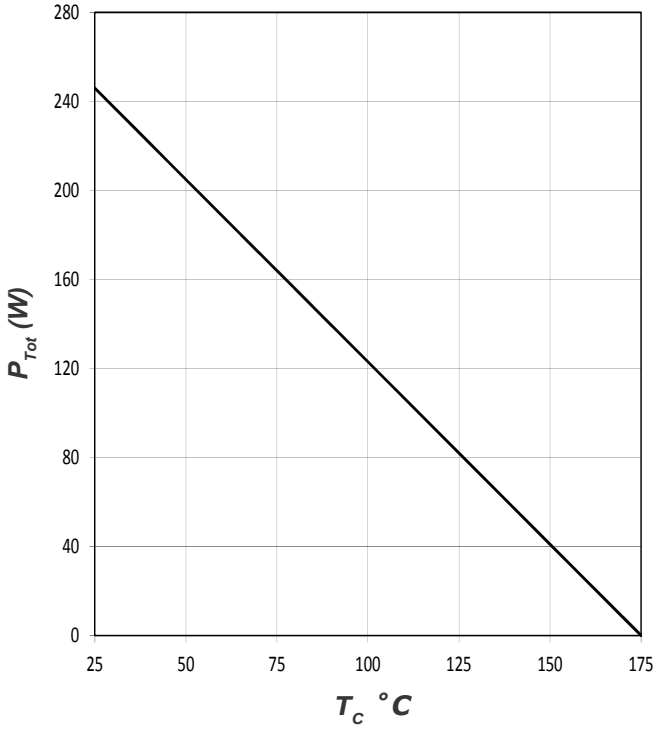

Figure 4. Power Derating

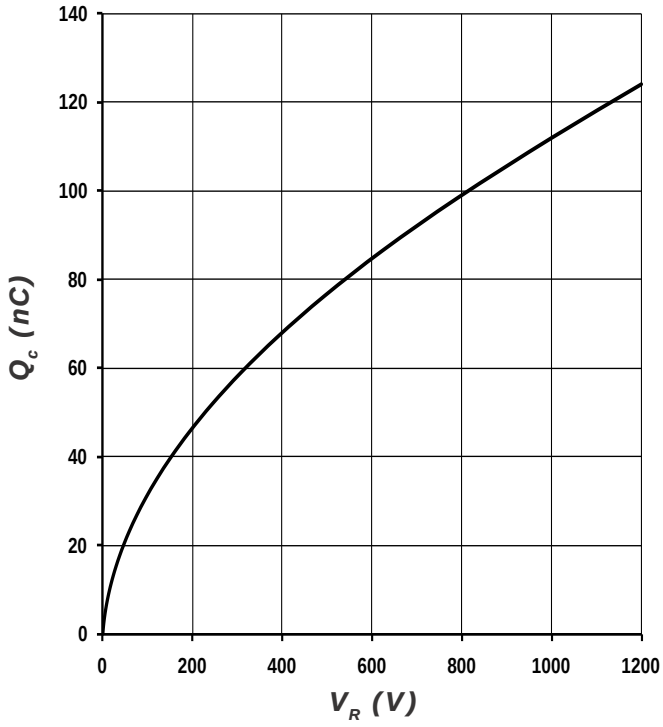

Figure 5. Recovery Charge vs. Reverse Voltage

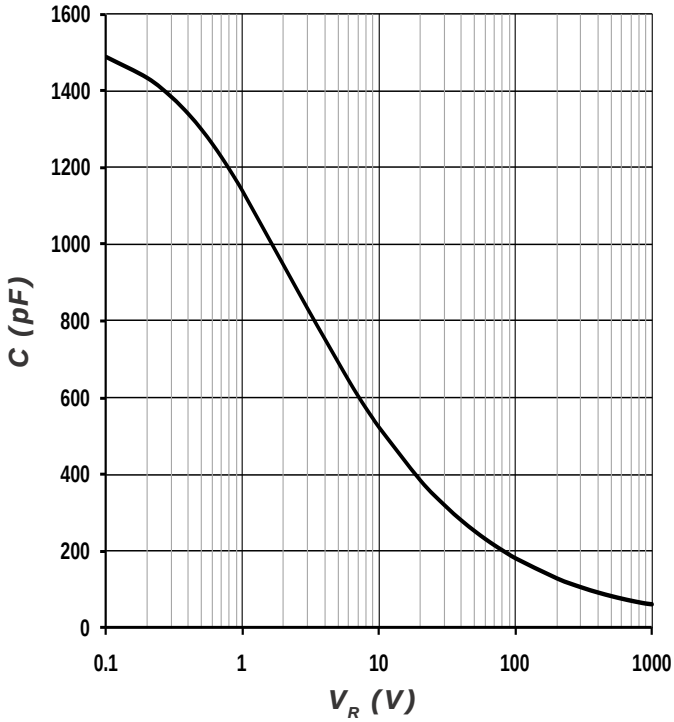

Figure 6. Capacitance vs. Reverse Voltage

Typical Performance

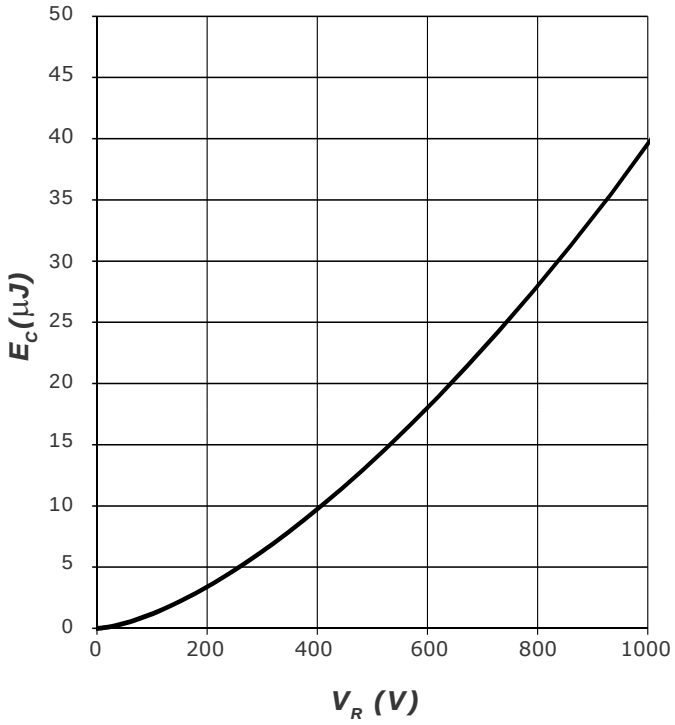

Figure 7. Typical Capacitance Stored Energy

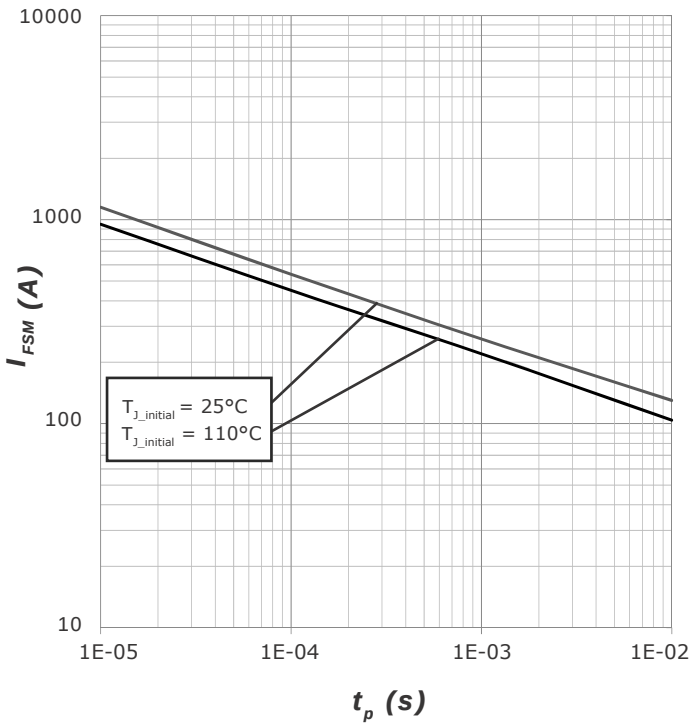

Figure 8. Non-Repetitive Peak Forward Surge Current versus Pulse Duration (sinusoidal waveform)

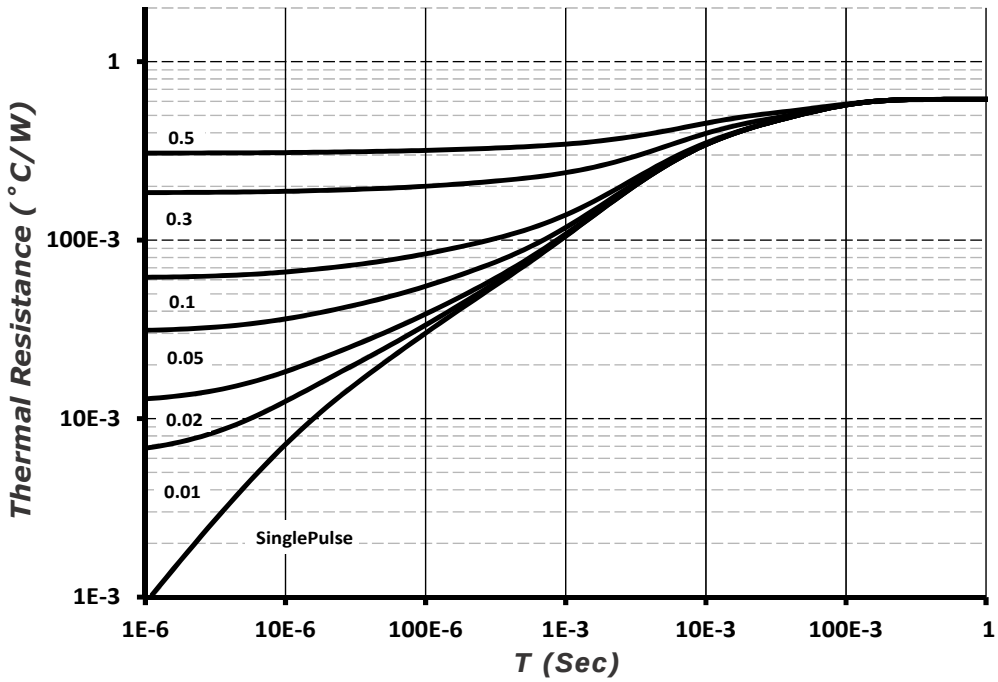

Figure 9. Transient Thermal Impedance

Diode Model

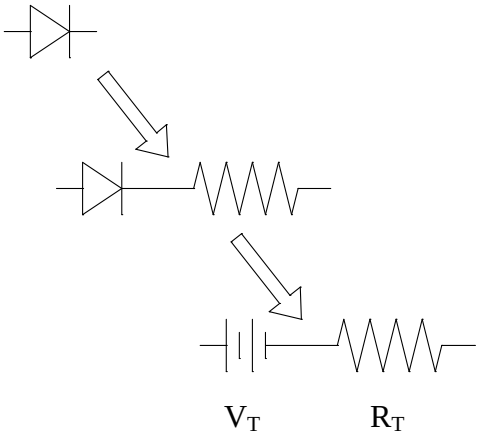

$$V_{fT} = V_T + If * R_T$$

$$V_T = 0.97 + (T_J * -1.40 * 10^{-3})$$
$$R_T = 0.023 + (T_J * 2.71 * 10^{-4})$$

Note: T_j = Diode Junction Temperature In Degrees Celsius, valid from 25°C to 175°C

Package Dimensions

Package: TO-247-2L

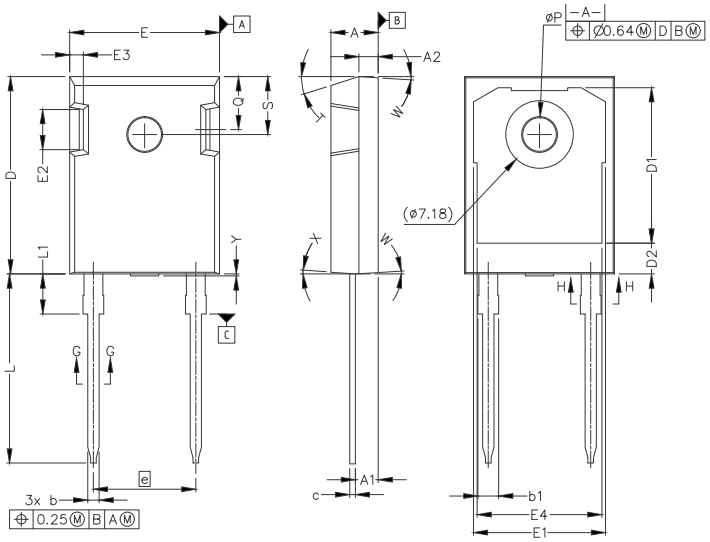

SYM	MILLIMETERS		INCHES	
	MIN	MAX	MIN	MAX
A	4.83	5.21	.190	.205
A1	2.29	2.54	.090	.100
A2	1.91	2.16	.075	.085
b'	1.07	1.28	.042	.050
b	1.07	1.33	.042	.052
b1	1.91	2.41	.075	.095
b2	1.91	2.16	.075	.085
c'	0.55	0.65	.022	.026
c	0.55	0.68	.022	.027
D	20.80	21.10	.819	.831
D1	16.25	17.35	.640	.683
D2	2.86	3.16	.112	.124
E	15.75	16.13	.620	.635
E1	13.10	14.15	.516	.557
E2	3.68	5.10	.145	.201
E3	1.00	1.90	.039	.075
E4	12.38	13.43	.487	.529
e	10.88 BSC		.428 BSC	
L	19.81	20.32	.780	.800
L1	4.10	4.40	.161	.173
øP	3.51	3.65	.138	.144
Q	5.49	6.00	.216	.236
S	6.04	6.30	.238	.248
T	17.5° REF.			
W	3.5° REF.			
X	4° REF.			
Y	0	0.50	0	0.020

Recommended Solder Pad Layout

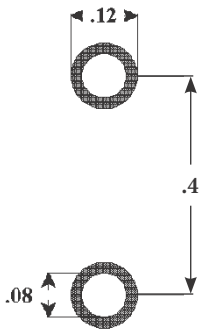

TO247-2L

all units are in inches

Attention

■ Any and all HUA XUAN YANG ELECTRONICS products described or contained herein do not have specifications that can handle applications that require extremely high levels of reliability, such as life-support systems, aircraft's control systems, or other applications whose failure can be reasonably expected to result in serious physical and/or material damage. Consult with your HUA XUAN YANG ELECTRONICS representative nearest you before using any HUA XUAN YANG ELECTRONICS products described or contained herein in such applications.

■ HUA XUAN YANG ELECTRONICS assumes no responsibility for equipment failures that result from using products at values that exceed, even momentarily, rated values (such as maximum ratings, operating condition ranges, or other parameters) listed in products specifications of any and all HUA XUAN YANG ELECTRONICS products described or contained herein.

■ Specifications of any and all HUA XUAN YANG ELECTRONICS products described or contained herein stipulate the performance, characteristics, and functions of the described products in the independent state, and are not guarantees of the performance, characteristics, and functions of the described products as mounted in the customer's products or equipment. To verify symptoms and states that cannot be evaluated in an independent device, the customer should always evaluate and test devices mounted in the customer's products or equipment.

■ HUA XUAN YANG ELECTRONICS CO.,LTD. strives to supply high-quality high-reliability products. However, any and all semiconductor products fail with some probability. It is possible that these probabilistic failures could
give rise to accidents or events that could endanger human lives, that could give rise to smoke or fire, or that could cause damage to other property. When designing equipment, adopt safety measures so that these kinds of accidents or events cannot occur. Such measures include but are not limited to protective circuits and error prevention circuits for safe design, redundant design, and structural design.

■ In the event that any or all HUA XUAN YANG ELECTRONICS products(including technical data, services) described or contained herein are controlled under any of applicable local export control laws and regulations, such products must not be exported without obtaining the export license from the authorities concerned in accordance with the above law.

■ No part of this publication may be reproduced or transmitted in any form or by any means, electronic or mechanical, including photocopying and recording, or any information storage or retrieval system, or otherwise, without the prior written permission of HUA XUAN YANG ELECTRONICS CO.,LTD.

■ Information (including circuit diagrams and circuit parameters) herein is for example only ; it is not guaranteed for volume production. HUA XUAN YANG ELECTRONICS believes information herein is accurate and reliable, but no guarantees are made or implied regarding its use or any infringements of intellectual property rights or other rights of third parties.

■ Any and all information described or contained herein are subject to change without notice due to product/technology improvement, etc. When designing equipment, refer to the "Delivery Specification" for the HUA XUAN YANG ELECTRONICS product that you intend to use.

Unikeyic Electronics

Global Electronic Components Distributor

Click to view pricing, inventory, delivery, and lifecycle information:

HXY MOSFET:

HCEZ36V,L3F LM393DR-HXY PESDNC2XD5VBF PJEC5V0M1FN2 HESD36VD3B HLY323BC1524L HRCLAMP3371ZCTFT PJSD24CW_R1 ESD5LM5.0C-HXY HACPDQC5V0-HF HESDSLC3V3D3B HAZ4007-01H HPTVSUC3D5VB HSEN2411D3 AZ4007-01H AZ4836-01L HSD15C.TCT HSEN3611D3 AQ15C-01FTG PESDLC2FD3V3BH PESDSC2FD5VU BV05C-H HSG3D15B3.3MA RLSD32A121V TPSMB100CA-VR TPSMB28A-VR 60N06 ESD5L5.0C-HXY HSTS521050B331 PESDNC2XD5VBL