THIS DRAWING IS UNPUBLISHED. RELEASED FOR PUBLICATION -,- .
© COPYRIGHT – TE Connectivity Ltd. ALL RIGHTS RESERVED.

REVISIONS					
P	LTR	DESCRIPTION	DATE	DWN	APVD
	5	REVISED AS PER ECR-24-199188	14FEB2024	SSM	SPS

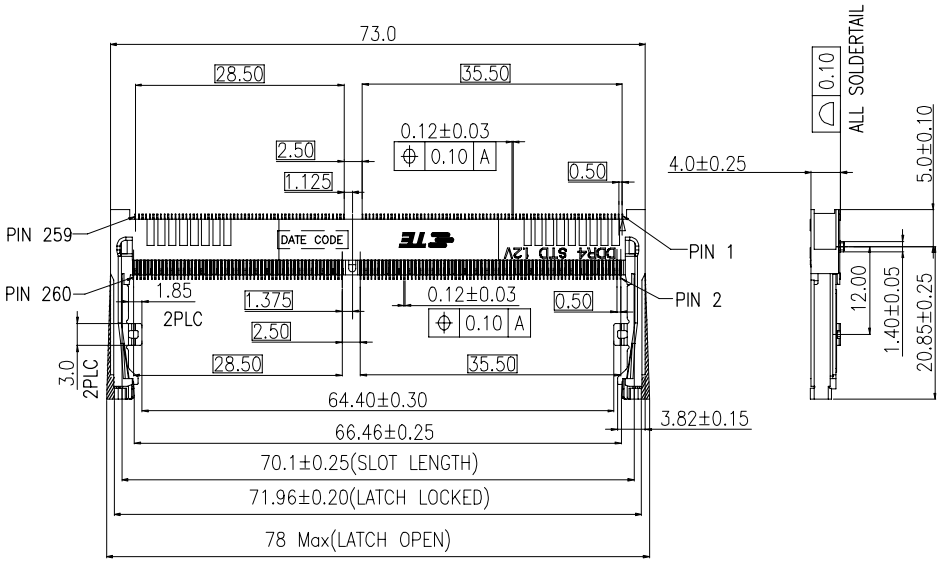

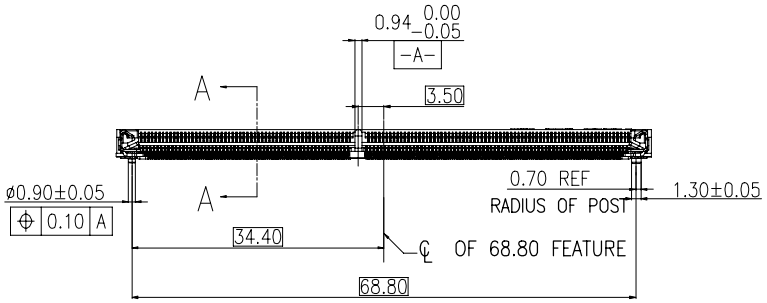

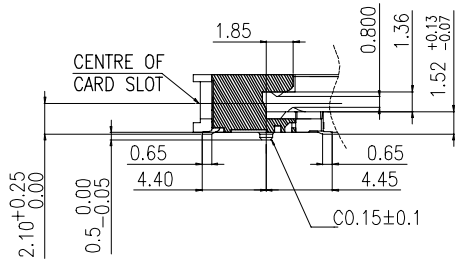

SECTION:A–A
SCALE 2:1

NOTES:
1.MATERIAL:
1.1 HOUSING:HIGH TEMPERATURE THERMO PLASTIC,UL94V–0,COLOR:BLACK.
1.2 CONTACT:COPPER ALLOY.
1.3 SOLDER PEG AND LATCH:STAINLESS STEEL.
2. FINISH:
SOLDER PEG: GOLD FLASH ON 50u" MIN NICKEL UNDERPLATED ALL OVER.
CONTACT SOLDER AREA: GOLD FLASH ON 50u" MIN NICKEL UNDERPLATED ALL OVER.
2.1 CONTACT AREA: GOLD FLASH ON 50u" MIN NICKEL UNDERPLATED ALL OVER.
2.2 CONTACT AREA: 5u" ON 50u" MIN NICKEL UNDERPLATED ALL OVER.
2.3 CONTACT AREA: 10u" ON 50u" MIN NICKEL UNDERPLATED ALL OVER.
2.4 CONTACT AREA: 15u" ON 50u" MIN NICKEL UNDERPLATED ALL OVER.
2.5 CONTACT AREA: 30u" ON 50u" MIN NICKEL UNDERPLATED ALL OVER.
3.COPLANARITY:0.10MAX.(BEFORE SOLDERRING)

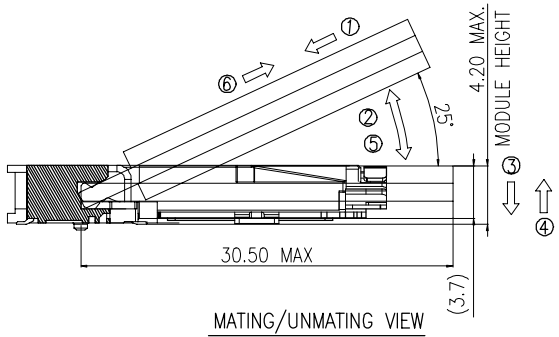

MATING/UNMATING VIEW
SCALE 2:1

MATING: ① INSERTING(25°) ——→ ② ROTATING ——→ ③ FIXED
UNMATING: ④ UNFIXED ——→ ⑤ ROTATING ——→ ⑥ WITHDRAWING

PAKING TYPE	HOUSING COLOR	POWER SUPPLY	FINISH	POS	PART NO.
TAPE&REEL	BLACK	1.2V	30u"	260	2309407–5
TAPE&REEL	BLACK	1.2V	15u"	260	2309407–4
TAPE&REEL	BLACK	1.2V	10u"	260	2309407–3
TAPE&REEL	BLACK	1.2V	5u"	260	2309407–2
TAPE&REEL	BLACK	1.2V	GF	260	2309407–1

THIS DRAWING IS A CONTROLLED DOCUMENT.

DIMENSIONS: mm

TOLERANCES UNLESS OTHERWISE SPECIFIED:
0 PLC ± –
1 PLC ± 0.25
2 PLC ± 0.15
3 PLC ± 0.10
4 PLC ± –
ANGLES ± –

MATERIAL –
FINISH –

DWN DAVID ZHAO 11MAR2021
CHK RICHARD MA 11MAR2021
APVD SIMON LI 11MAR2021
PRODUCT SPEC 108–115122
APPLICATION SPEC –
WEIGHT –

TE Connectivity

NAME
DDR4 SODIMM SOCKET
0.5mm PITCH 260POS
4.0mm HEIGHT STANDARD TYPE

SIZE A2 | CAGE CODE 00779 | DRAWING NO C-2309407 | RESTRICTED TO –

CUSTOMER DRAWING | SCALE 2:1 | SHEET 1 OF 3 | REV 5

2309407

THIS DRAWING IS UNPUBLISHED. RELEASED FOR PUBLICATION -,- .
© COPYRIGHT – TE Connectivity Ltd. ALL RIGHTS RESERVED.

REVISIONS					
P	LTR	DESCRIPTION	DATE	DWN	APVD
	–	–	–	–	–

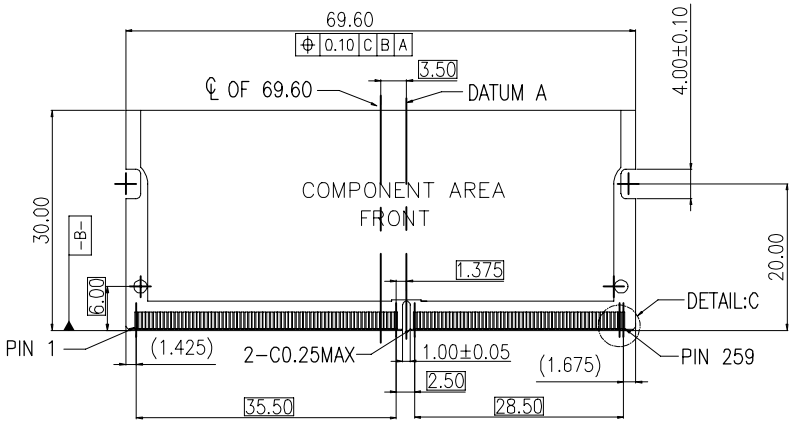

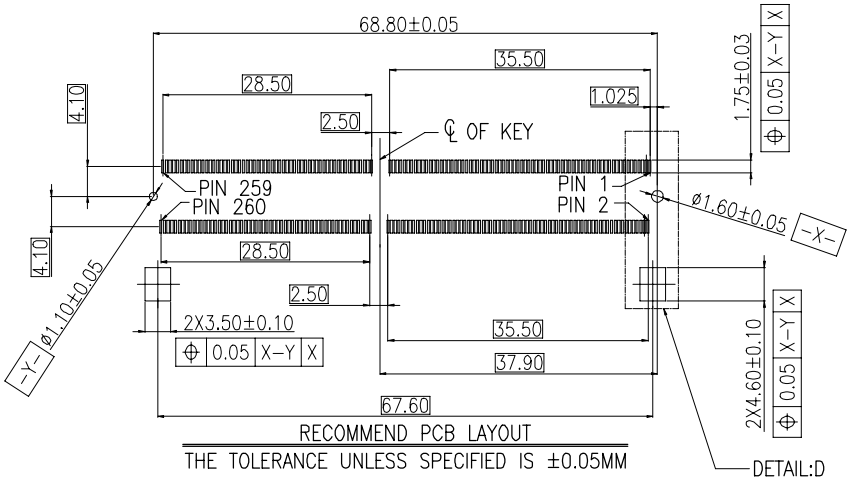

RECOMMEND PCB LAYOUT
THE TOLERANCE UNLESS SPECIFIED IS ±0.05MM

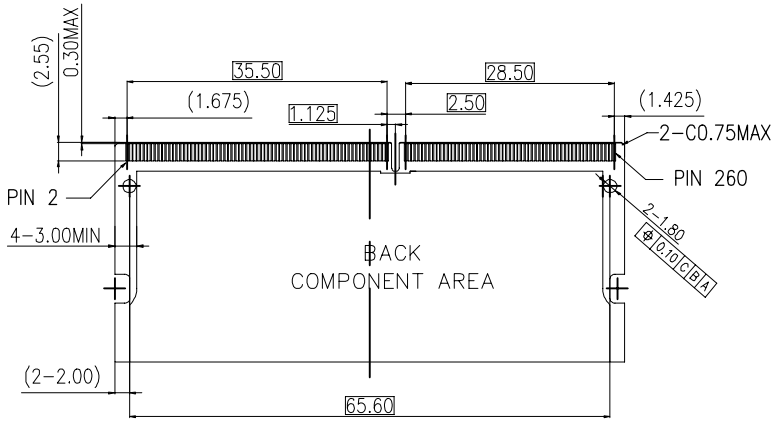

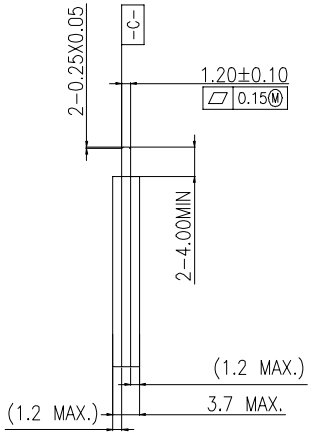

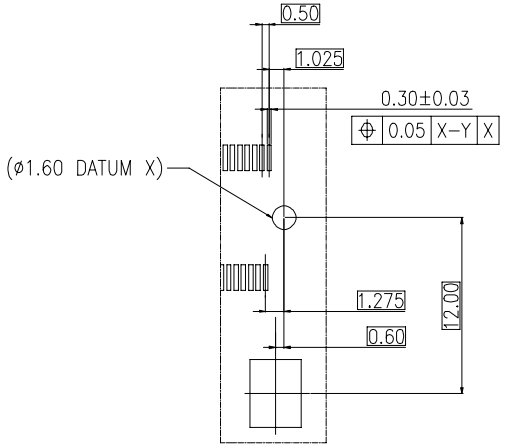

DETAIL:D
SCALE 2:1

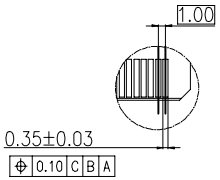

DETAIL:C
SCALE 2:1

THIS DRAWING IS A CONTROLLED DOCUMENT.	DWN DAVID ZHAO 11MAR2021	TE Connectivity	
DIMENSIONS: mm	CHK RICHARD MA 11MAR2021	NAME	DDR4 SODIMM SOCKET 0.5mm PITCH 260POS 4.0mm HEIGHT STANDARD TYPE
TOLERANCES UNLESS OTHERWISE SPECIFIED: 0 PLC ± / 1 PLC ± / 2 PLC ± / 3 PLC ± / 4 PLC ± / ANGLES ±	APVD SIMON LI 11MAR2021	SIZE A2	CAGE CODE 00779
MATERIAL	PRODUCT SPEC	DRAWING NO	C-2309407
FINISH	APPLICATION SPEC	RESTRICTED TO	
	WEIGHT	CUSTOMER DRAWING	SCALE 2:1 SHEET 2 OF 3 REV 5

2309407

THIS DRAWING IS UNPUBLISHED. RELEASED FOR PUBLICATION -,- .
© COPYRIGHT – DAVID ZHAO ALL RIGHTS RESERVED.

REVISIONS					
P	LTR	DESCRIPTION	DATE	DWN	APVD
	–	–	–	–	–

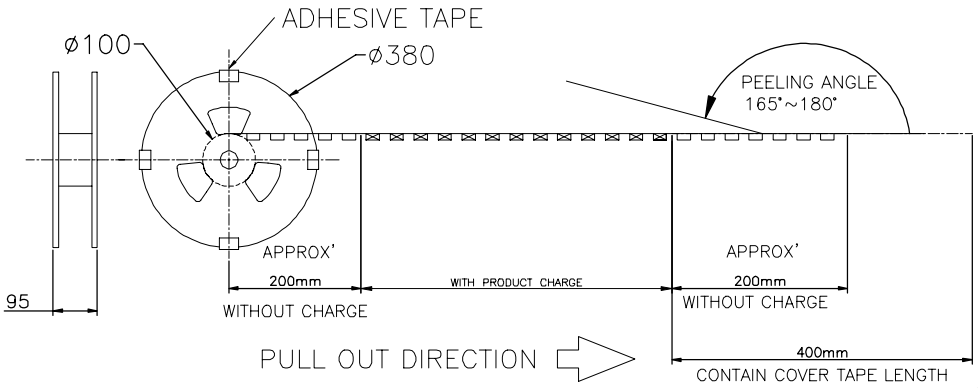

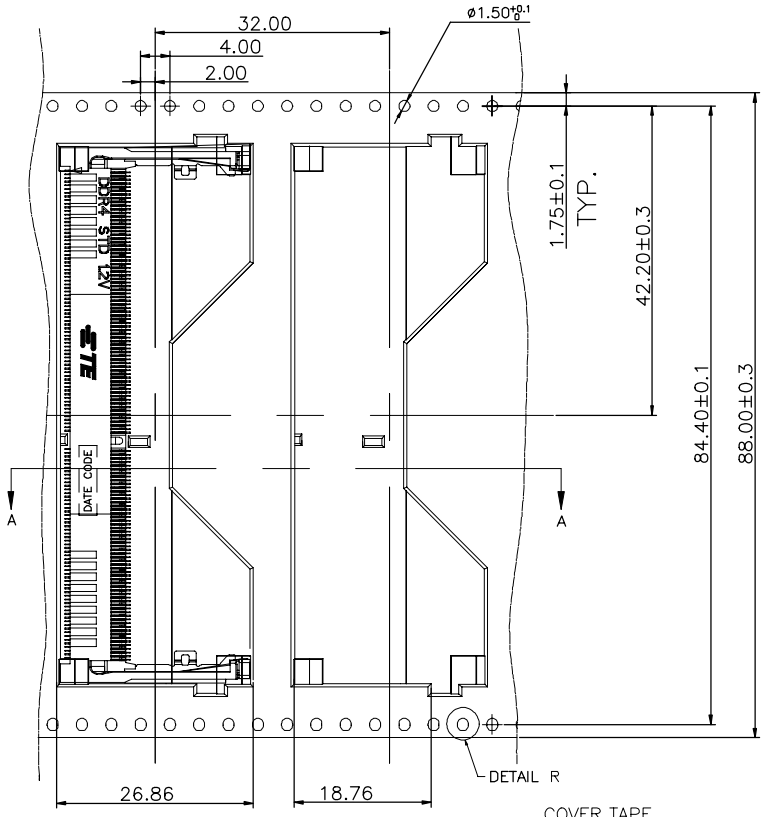

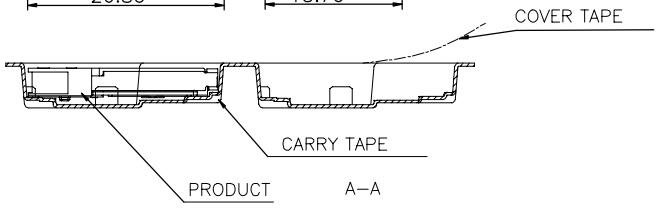

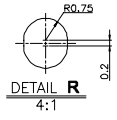

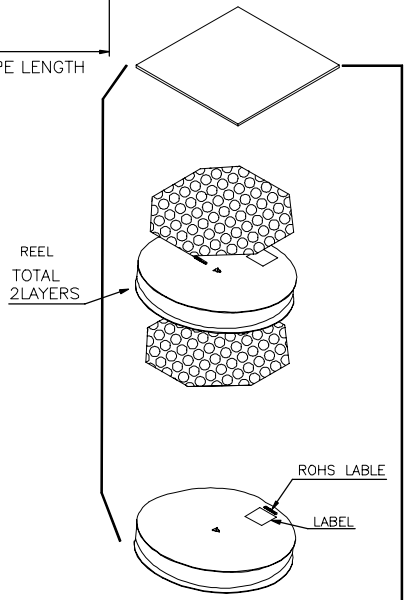

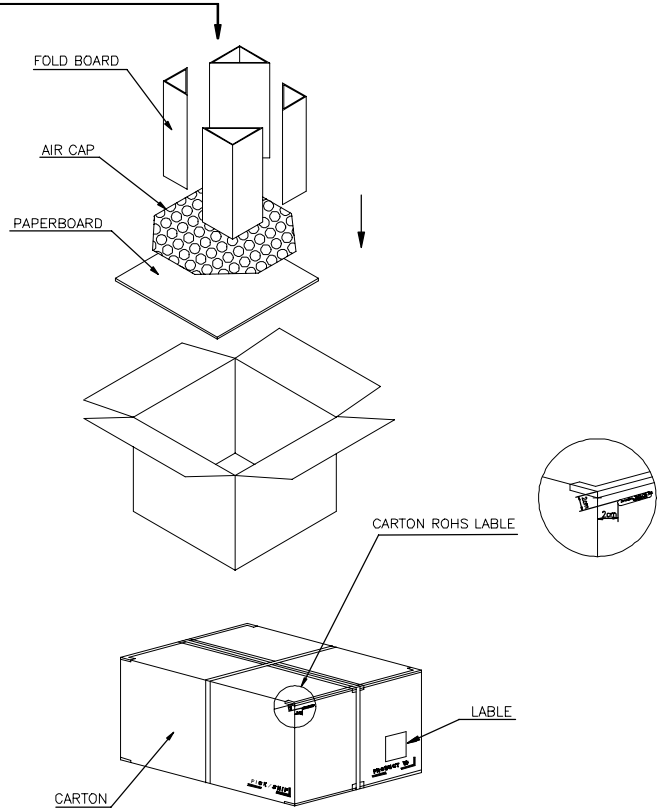

450	2	900	*–2309407–*
PCS/ REEL	REEL/ CARTON	PCS/ CARTON	PART NUMBER

THIS DRAWING IS A CONTROLLED DOCUMENT.

DIMENSIONS: mm

TOLERANCES UNLESS OTHERWISE SPECIFIED:
0 PLC ±
1 PLC ± –
2 PLC ± – –
3 PLC ± – –
4 PLC ± – –
ANGLES ± –

MATERIAL

FINISH

DWN	DAVID ZHAO	11MAR2021
CHK	RICHARD MA	11MAR2021
APVD	SIMON LI	11MAR2021
PRODUCT SPEC		
APPLICATION SPEC		
WEIGHT		

TE Connectivity

NAME: DDR4 SODIMM SOCKET
0.5mm PITCH 260POS
4.0mm HEIGHT STANDARD TYPE

SIZE	CAGE CODE	DRAWING NO	RESTRICTED TO
A2	00779	C-2309407	–

CUSTOMER DRAWING | SCALE 2:1 | SHEET 3 OF 3 | REV 5

1471-9 (1/15)

2309407

Unikeyic Electronics

Global Electronic Components Distributor

Click to view pricing, inventory, delivery, and lifecycle information:

TE Connectivity:

141991-2 3430B2F51RTDF CPF0402B37K4E1 MPT100C18RF 650075-000 936348-1 1-962915-1 175977-2 1969656-1 2310537-1 1743455-2 2-292161-3 2377783-2 SMW73R0JT 2834055-1 SBCHE64R7K 1-794222-0 1393431-1 917696-1 ROX05SJ18R SBCHE154R7K TE50BR39J 2005330-1 3-1393225-0 CRGCQ2010J3K3 U5254-000005-030PA 1903112-2 2380312-2 3631B101LL RH73H2A40MKTN