CUI Devices is now Same Sky! Learn More

SERIES: CDM1261 | DESCRIPTION: M12 CABLE

FEATURES

- M12 molded female cable connector
- D code
- right-angle
- IP67
- 0.5, 1, 2, 3, & 5 meter length options



SPECIFICATIONS

parameter	conditions/description	min	typ	max	units
rated voltage				60	V
rated current				1.5	A
withstanding voltage	for 1 minute		1,500		Vac
contact resistance				10	mΩ
insulation resistance	at 500 Vdc for 1 minute	100			MΩ
insertion/withdrawal force		0.3		3.0	kgf
operating temperature		-25		80	°C
life		100			cycles
safety approvals	compliant with IEC61076-2-101				
flammability rating	see material table				
RoHS	yes				
IP level	M12: IP67 (in mated condition) RJ45: IP20				

PART NUMBER KEY

CDM1261 - 04D - 01FRA - XXX - RJ45 - 67

Base Number

Cable Length:
05M = 0.5 m
1M = 1 m
2M = 2 m
3M = 3 m
5M = 5 m

MECHANICAL DRAWING

units: mm
tolerance:
0.5<X≤6.0: ±0.1 mm
6.0<X≤30.0: ±0.2 mm
unless otherwise noted

ITEM	DESCRIPTION	MATERIAL	PLATING/COLOR
A	cable	CAT5 (100 Mbps), UL2464, 26 AWG PVC jacket	
B	M12x1.0 screw	brass	nickel
C	terminals; female	brass	gold
D	housing; female	PA66 (UL94V-0)	black
E	overmold	UL20549 PUR	black
F	shield pipe	brass	nickel
G	o-ring	FKM	green
H	connector	RJ45 8PIN shield shell	black

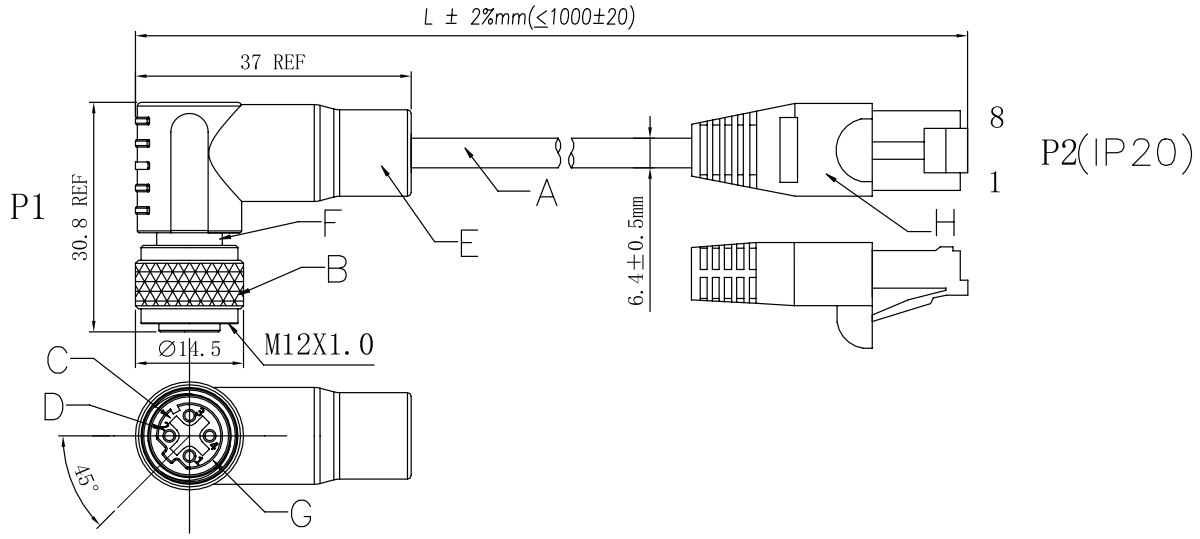

No. of Poles	4
D-Coding	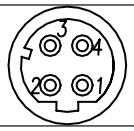
Cable	26 AWG twisted pair X 2C + AL + Braid OD: Ø6.4 mm
Wiring	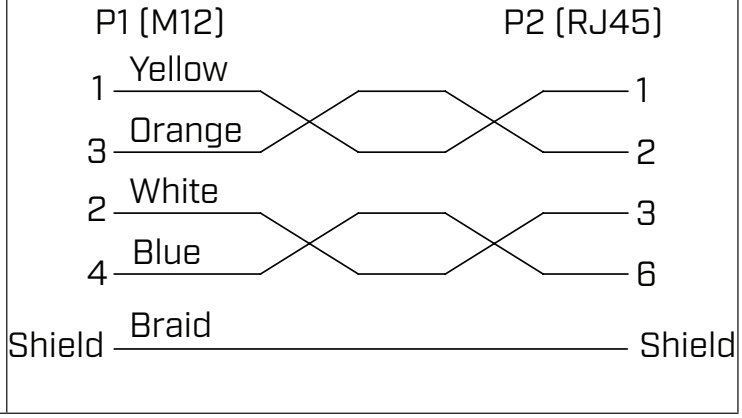

REVISION HISTORY

rev.	description	date
1.0	initial release	05/15/2024
1.01	CUI Devices rebranded to Same Sky	09/12/2024

The revision history provided is for informational purposes only and is believed to be accurate.

same sky

Same Sky offers a one (1) year limited warranty. Complete warranty information is listed on our website.

Same Sky reserves the right to make changes to the product at any time without notice. Information provided by Same Sky is believed to be accurate and reliable. However, no responsibility is assumed by Same Sky for its use, nor for any infringements of patents or other rights of third parties which may result from its use.

Same Sky products are not authorized or warranted for use as critical components in equipment that requires an extremely high level of reliability. A critical component is any component of a life support device or system whose failure to perform can be reasonably expected to cause the failure of the life support device or system, or to affect its safety or effectiveness.

sameskydevices.com