GENERAL DESCRIPTION

The MCP6001 are general purpose ,low offset , high frequency response and low power operational amplifiers. With an excellent bandwidth of 1MHz, a slew rate of 1V/μs, and a quiescent current of 28μA per amplifier at 5V, the MCP6001 family can be designed into a wide range of applications.
The MCP6001 op-amps are designed to provide optimal performance in low voltage and low power systems. The input common-mode voltage range includes ground, and the maximum input offset voltage are 3mV. These parts provide rail-to-rail output swing into heavy loads.
The MCP6001 families of operational amplifiers are specified at the full temperature range of -40°C to +85°C under single or dual power supplies of 1.8V to 5.5V.

FEATURES

- VDD range:1.8V to 5.5V
- Low Ofset Voltage:0.5mV (Typical)
- Low Drift:0.65μV/C(Typical)
- Low Noise
- Quiescent Current:28μA
- Rail to Rail Input/Output
- MicroSize Packages:SC70-5 and SOT23-5

Applications

- Transducers
- Temperature Measurement
- Electronic Scales
- Medical instrumentation
- Handheld Test Equipment

Reference News

PIN CONFIGURATION	Marking	
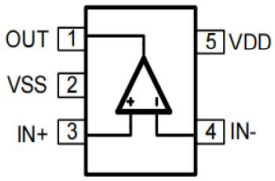 MCP6001		
SOT-23-5/SC70-5	SOT-23-5	SC70-5
PIN CONFIGURATION	**Marking**	
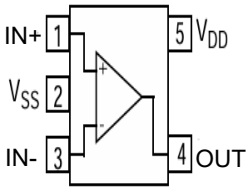 MCP6001U		
SOT-23-5/SC70-5	SOT-23-5	SC70-5

PIN DESCRIPTION

Pin Name	Pin Numbel		Description
	MCP6001	MCP6001U	
OUT	1	4	Output
VSS	2	2	Negative(lowest)powersupply
IN+	3	1	Noninverting inpu
IN-	4	3	Inverting inpu
VDD	5	5	Positive(highest)power supply

SIMPLIFIED SCHEMATIC

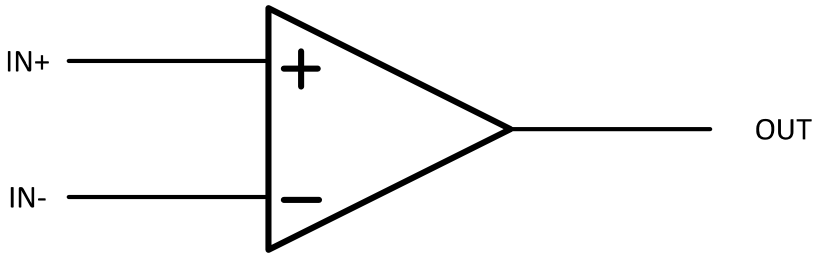

Figure 1.Simpliied Schematic

ABSOLUTE MAXIMUM RATINGS

Thermal Resistance 0 Jc.....130°C/W
Supply Voltage.....1.8 to 5.5V
Signal Input Terminals Voltage.....-0.1 to (V+)+0.1V
Operating Junction Temperature.....150℃
Operating Temperature Range ..... -40°C to 85℃
Storage Temperature ..... -65°℃ to 150℃

REEL SPECIFICATION

P/N	PKG	QTY
MCP6001T-I/OT	SOT-23-5	3000
MCP6001T-I/LT	SC70-5	3000
MCP6001UT-I/OT	SOT-23-5	3000
MCP6001UT-I/LT	SC70-5	3000

ELECTRICAL CHARACTERISTICS

(At TA=25° C, RL=10k connected to Vs/2, and Vour=Vs/2, unless otherwise noted.)

PARAMETER	CONDITIONS	MIN	TYP	MAX	UNIT
Input Offset Voltage		-3	0.5	3	mV
nput Offset Voltage Drift	TA=-40° ℃ to 85° ℃		1.8		μV/℃
Power Supply Rejection Ratio	Vs =1.8V to 5.5V TA=-40℃ to 85℃	80	90		dB
Input Bias Curren	TA=25℃		2.0		pA
Input Offset Current			1.0		pA
Common-mode Voltage Range		(V-)-0.1		(V+)+0.1	V
Common-mode Rejection Ratio	V-)-0.1<Vcm<(V+)+0.1 TA=-40℃ to 85℃	80	95		dB
Open Loop Voltage Gain	(V-)+100mV<Vo<(V+)-100mV, RL=10k TA=-40° ℃ to 85℃	80	100		dB
Gain-bandwidth product	CL=120pF		1.5		MHz
Slew Rate	G=+1		1.2		V/μs
Specified Voltage Range		1.8		5.5	V
Quiescent Current			28	40	μA
Operating Temperature Range		-40		85	℃
Storage Temperature Range		-65		150	℃

TYPICAL PERFORMANCE CHARACTERISTICS

(At T_A = 25°C, V_S=5V, C_L=20pF, unless otherwise noted.)

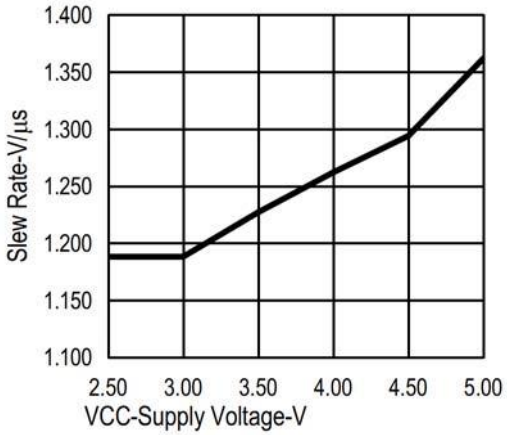

Figure 2. Slew Rate vs Supply Voltage

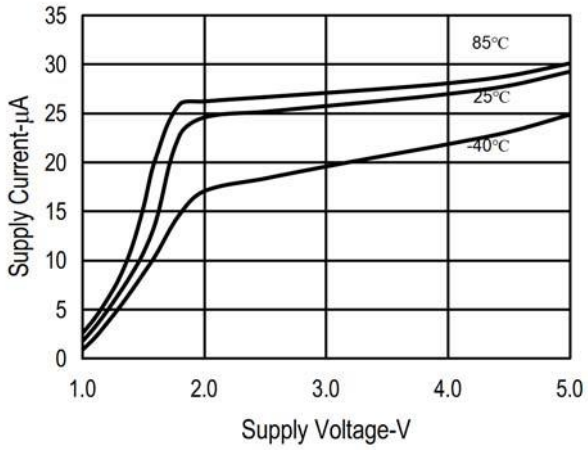

Figure 3. Supply Current vs Supply Voltage

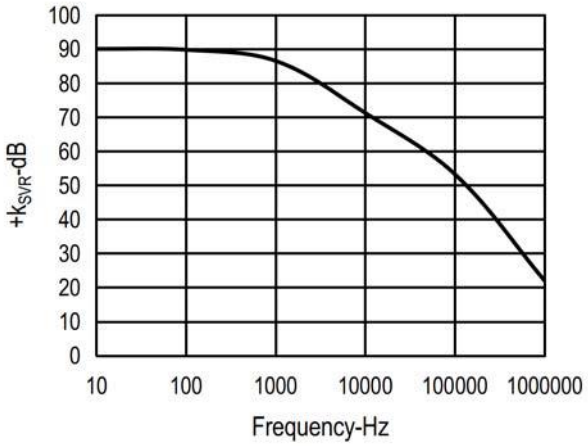

Figure 4. +kSVR vs Frequency

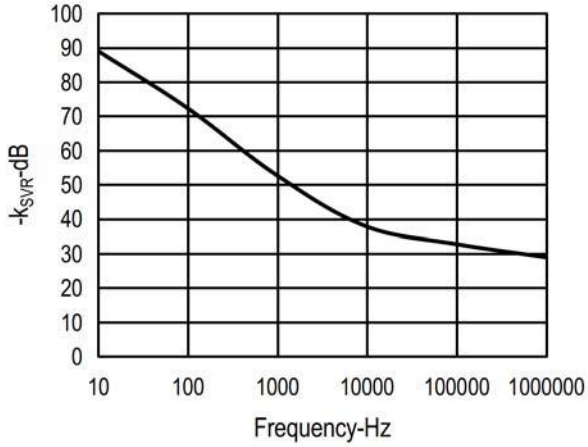

Figure 5. -kSVR vs Frequency

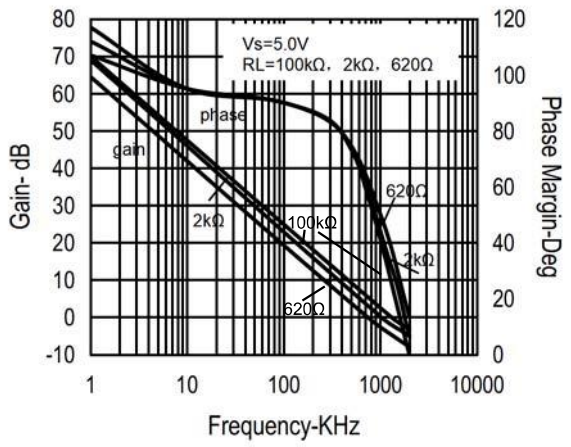

Figure 6. Frequency Response vs Resistive Load

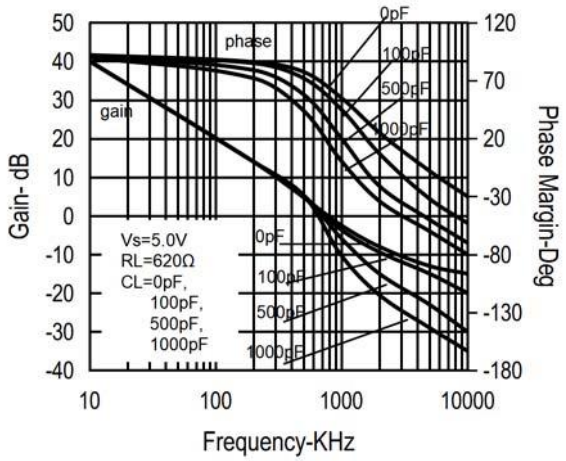

Figure 7. Frequency Response vs Capacitive Load

TYPICAL PERFORMANCE CHARACTERISTICS

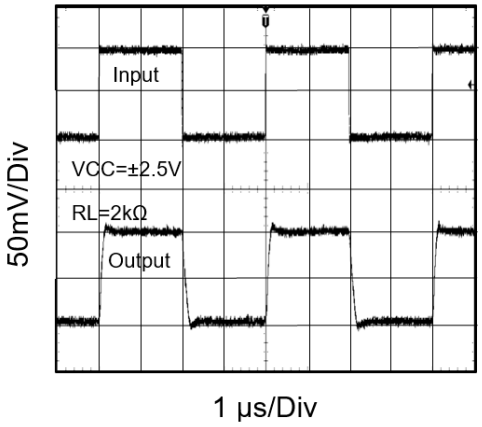

Figure 8. Noninverting Small-Signal Pulse Response

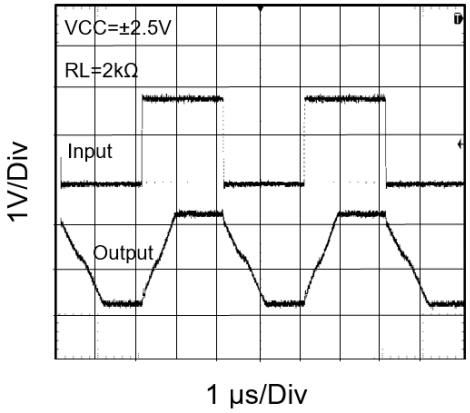

Figure 9. Noninverting Large-Signal Pulse Response

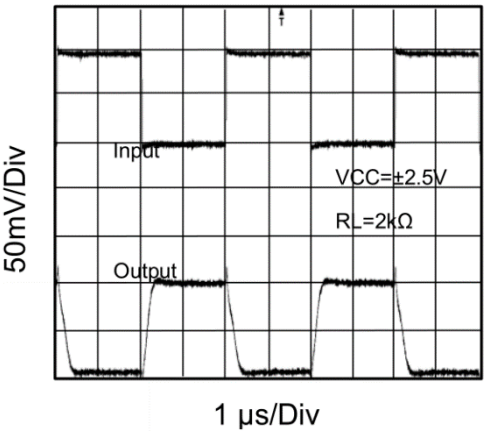

Figure 10. Inverting Small-Signal Pulse Response

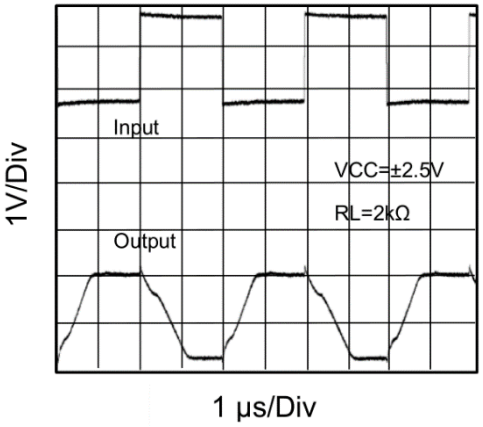

Figure 11. Inverting Large-Signal Pulse Response

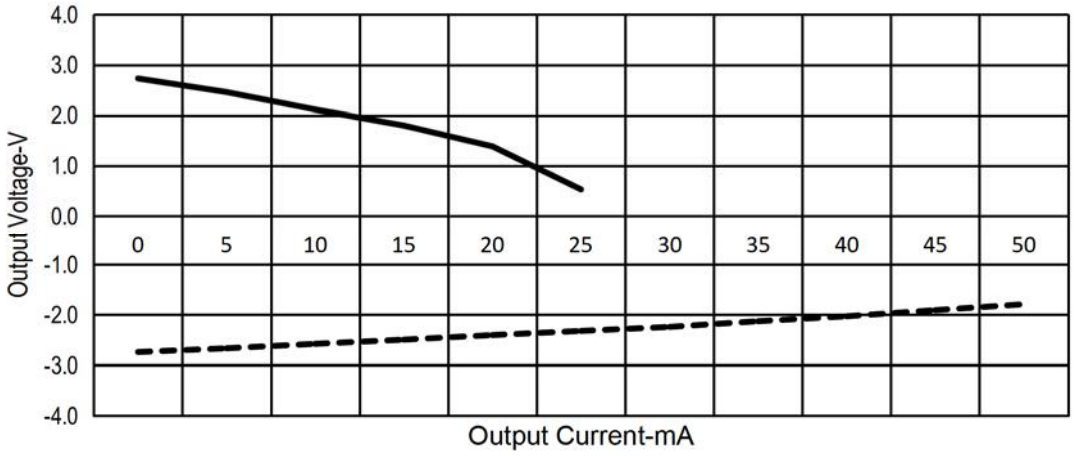

Figure 12. Output Voltage vs Output Current

FUNCTIONAL DESCRIPTION

Operating Voltage

The MCP6001 devices are fully specified and ensured for operation from 1.8V to 5.5 V. In addition, many specifications apply from -40℃ to 85℃. Parameters that vary significantly with operating voltages or temperature are shown in the Typical Characteristics graphs.

Unity-Gain Bandwidth

The unity-gain bandwidth is the frequency up to which an amplifier with a unity gain may be operated without greatly distorting the signal .The MCP6001 device has a 1.5-MHz unity-gain bandwidth.

APPLICATIONS INFORMATION

The MCP6001 is a unity-gain stable , precision operational amplifier with very low offset voltage drift ; these devices are also free from output phase reversal. Applications with noisy or high-impedance power supplies require decoupling capacitors close to the device power-supply pins.In most cases, 0.1 μF capacitors are adequate.

Typical Application

Figure 13 shows a simple circuit to convert a single-ended input into differential output .The MCP6001 could be used to build this circuit . The circuit is composed of two amplifiers.One amplifier acts as a buffer and creates a voltage,VouT+.The second amplifier inverts the input and adds a reference voltage to generate Vour-.Both Vour+ and Vour-range from 0.5 to 2V.The diference, VDIFF,is the difference between Vour+and VouT-.

Slew Rate

The slew rate is the rate at which an operational amplifier can change its output when there is a change on the input.The MCP6001 devices have a 1 .2-V/μ s slew rate.The MCP6001 is characterized toperform with this technique the recommended resistor value is approximately 20k.

Device Functional Modes

The MCP6001 device has a single functional mode. The device is powered on as long as the power supply voltage is between 1.8V(±0.9V)and 5.5V(±2.75V)

Detailed Design Procedure

Linearity over the input range is key for good dc accuracy. The common mode input range and the output swing limitations determine the linearity.In general,an amplifier with rail-to-rail input and output swing is required. Bandwidth is a key concern for this design.
Because MCP6001 has a bandwidth of 1MHz , this circuit will only be able to process signals with frequencies of less than 1 MHz.

Because the transfer function of Vour-is heavily reliant on resistors(R1,R2,R3,and R4),use resistors with low tolerances to maximize performance and minimize error.This design used resistors with resistance values of 36 k with tolerances measured to be within 2%.If the noise of the system is a key parameter,the user can select smaller resistance values (6kor lower)to keep the overall system noise low.This ensures that the noise from the resistors is lower than the amplifier noise.

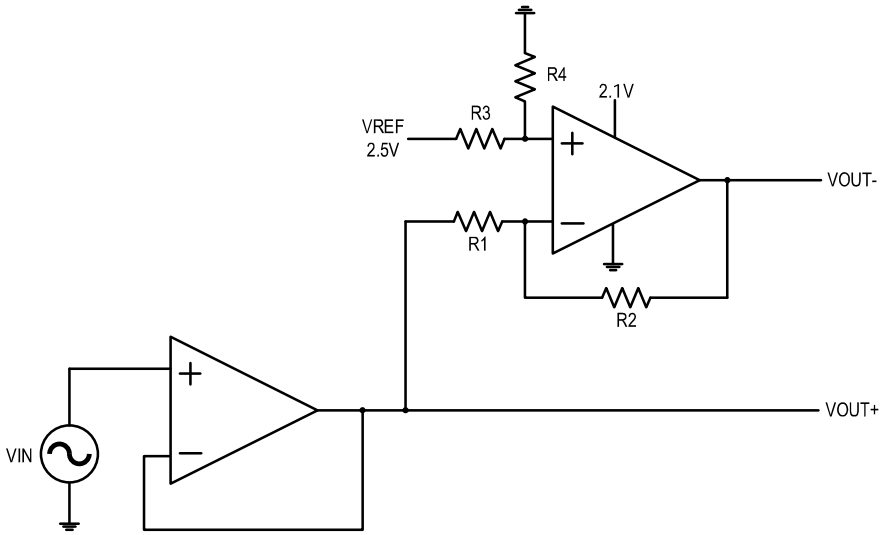

Figure 13. Schematic for Single-Ended Input to Differential Output Conversion

LAYOUT

Use good PCB layout practices for best operational performance of the device, including:

- Keep the length of input traces as short as possible.
- Run the input traces as far away from the supply lines as possible to reduce parasitic coupling.
- Place components close to device and to each other to reduce parasitic capacitance and parasitic errors.
- Use low-ESR, ceramic bypass capacitors to reduce the coupled noise by providing low impedance power sources local to the analog circuitry.
- Grounding for analog and digital portions of circuitry separately to suppresse the noise.

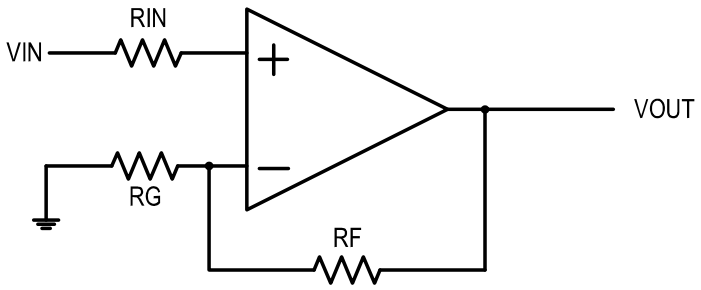

Package Outline Dimensions (All dimensions in mm(inch).)

SC-70-5

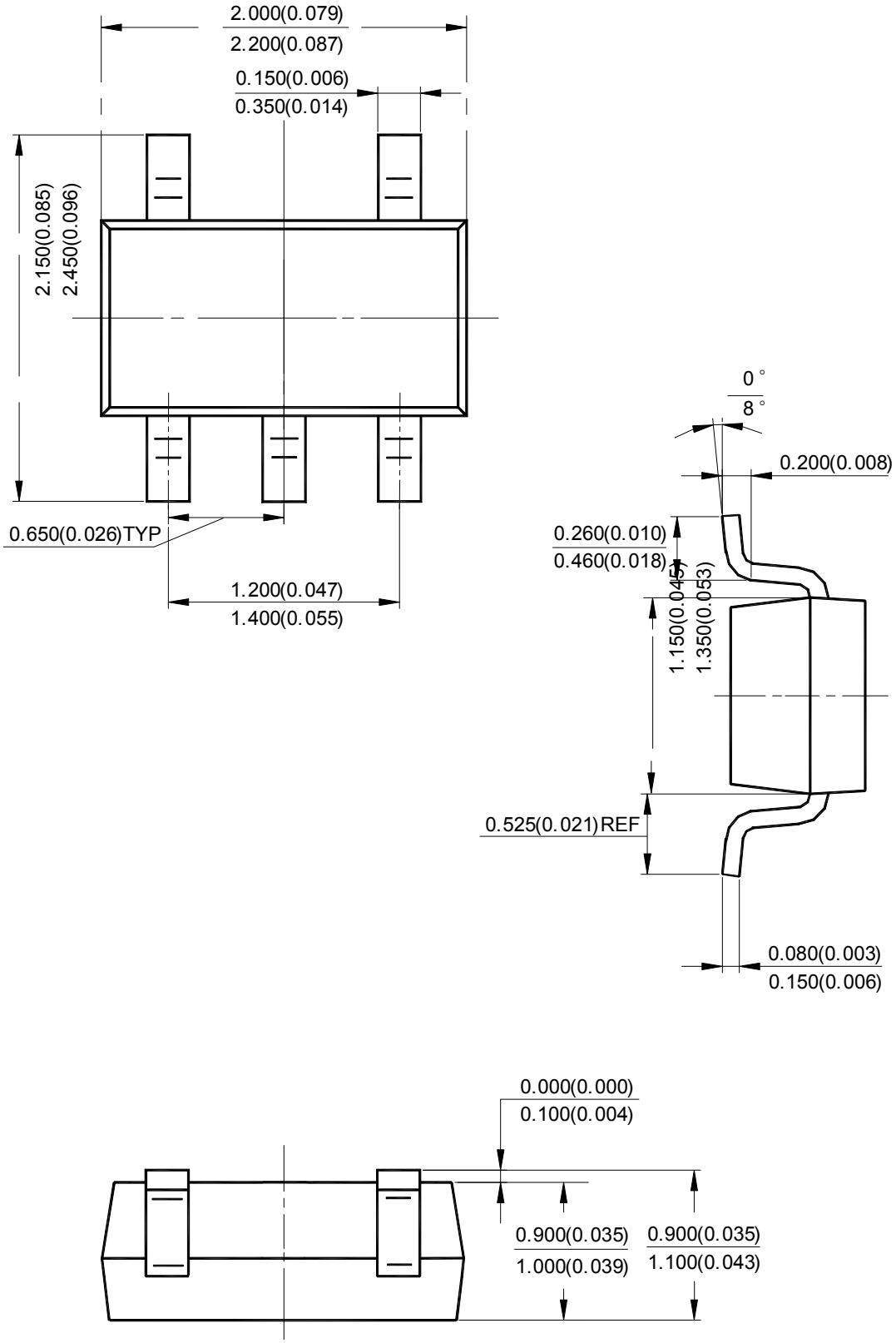

Package Outline Dimensions (Cont. All dimensions in mm(inch).)

SOT-23-5

