

奇数キャビティ：トレードマーク
偶数キャビティ：キャビティ番号及び金型番号
ODD CAV:TRADE MARK
EVEN CAV:CAVITY & MOLD NUMBER

4A

奇数キャビティ：キャビティ番号及び金型番号
偶数キャビティ：トレードマーク
ODD CAV:CAVITY & MOLD NUMBER
EVEN CAV:TRADE MARK

MX

DETAIL Y
SCALE 10:1

DETAIL Z
SCALE 10:1

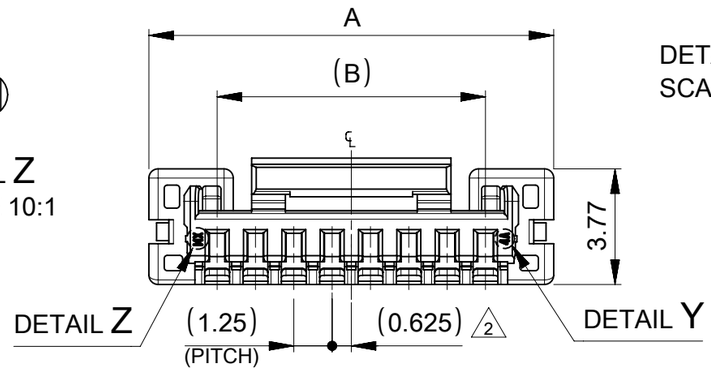

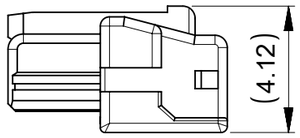

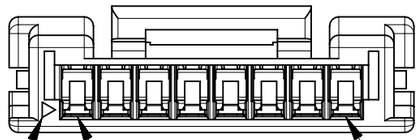

回路番号 1 マーク
CIRCUIT 1 MARK

回路番号 1
CIRCUIT 1

回路番号 N
CIRCUIT N

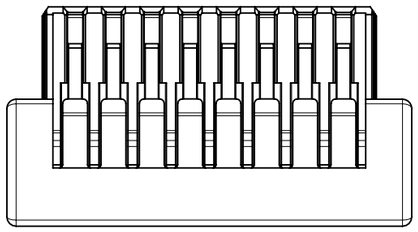

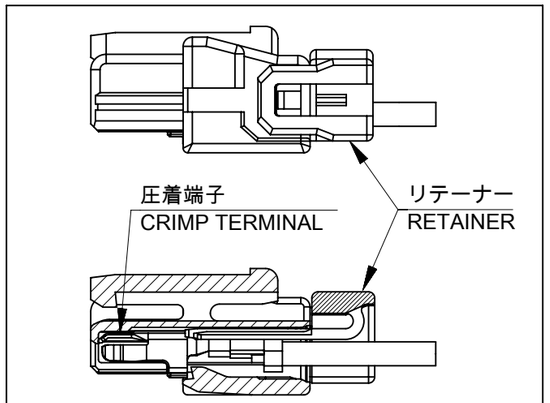

圧着端子 & リテーナー 装着図
CRIMP TERMINAL & RETAINER
ASSEMBLY DRAWING

注記 NOTE

1. 材料：TABLE 1参照
   MATERIAL : SEE TABLE 1.
2. 偶数極に適用。
   APPLY TO EVEN CIRCUIT.
3. 製品仕様書、コネクタ取扱説明書、適合嵌合相手、適合端子、
   適合リテーナーはSHEET 3をご参照ください。
   PLEASE REFER TO SHEET 3 FOR PRODUCT SPECIFICATION,
   APPLICATION SPECIFICATION, MATE WITH,
   APPLICABLE CRIMP TERMINAL, APPLICABLE RETAINER.
4. 発注番号 : SHEET 3 参照
   ORDER NUMBER : PLEASE REFER TO SHEET 3

214526**0*

極数
CIRCUIT SIZE

番号 NO.	ハウジングカラー HOUSING COLOR
0	ナチュラル (白) NATURAL (WHITE)
1	黒 BLACK
2	赤 RED
3	黄 YELLOW
4	青 BLUE

1 TABLE1

部品 PART	材質 MATERIAL
ハウジング HOUSING	PBT, UL94 V-0, 色およびローハロゲン対応：SHEET2参照 PBT, UL94 V-0, COLOR AND LOW-HALOGEN : SEE SHEET 2.

DOCUMENT STATUS	P1	RELEASE DATE	2023/09/12	06:08:39					

10	14.45	9
8.75	13.2	8
7.5	11.95	7
6.25	10.7	6
5	9.45	5
3.75	8.2	4
2.5	6.95	3
1.25	5.7	2
B	A	極数 CIRCUIT SIZE

THIS DRAWING CONTAINS INFORMATION THAT IS PROPRIETARY TO MOLEX ELECTRONIC TECHNOLOGIES, LLC AND SHOULD NOT BE USED WITHOUT WRITTEN PERMISSION

DIMENSION UNITS	SCALE
mm	NTS

GENERAL TOLERANCES (UNLESS SPECIFIED)

ANGULAR TOL	±	3.0 °
4 PLACES	±	0.2
3 PLACES	±	0.2
2 PLACES	±	0.2
1 PLACE	±	0.2
0 PLACES	±	0.2

DRAFT WHERE APPLICABLE MUST REMAIN WITHIN DIMENSIONS

CURRENT REV DESC:

EC NO: 757367
DRWN: SOKUMURA01 2023/07/21
CHK'D: SAKIYAMA 2023/09/12
APPR: AIDA 2023/09/12

INITIAL REVISION:
DRWN: RTANAKA02 2020/05/13
APPR: AIDA 2022/11/28

THIRD ANGLE PROJECTION | DRAWING: A3-SIZE | SERIES: 214526

molex

MICRO-LOCK PLUS 1.25
SINGLE ROW RECEPTACLE HOUSING TPA TYPE

PRODUCT CUSTOMER DRAWING

DOCUMENT NUMBER	DOC TYPE	DOC PART	REVISION
2145260000-SD	PSD	000	B

MATERIAL NUMBER	CUSTOMER	SHEET NUMBER
SEE SHEET2	GENERAL	1 OF 3

FORMAT: master_B-size-A3
REVISION: J1
DATE: 2021/05/07

製品形状
PRODUCT SHAPE

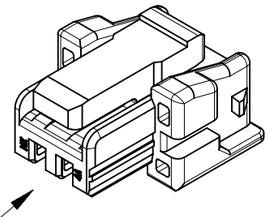

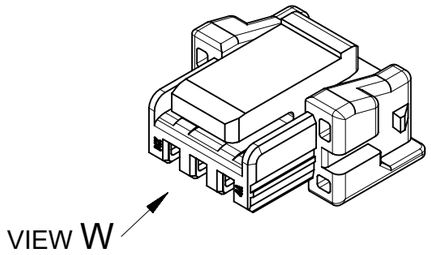

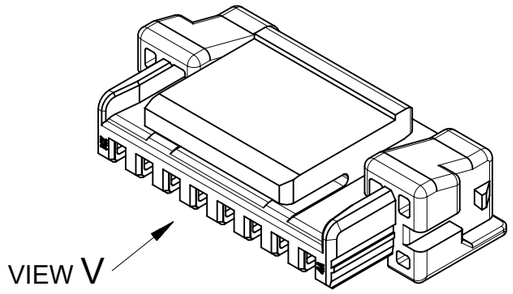

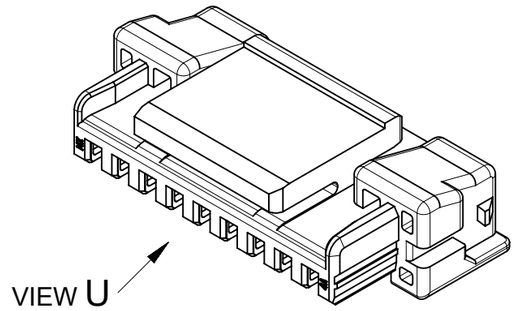

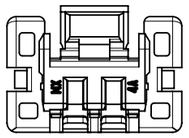

VIEW X
2極
2CIRCUIT

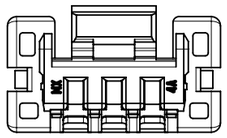

VIEW W
3-7極
3-7 CIRCUIT

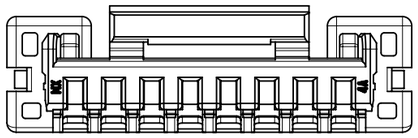

VIEW V
8極
8 CIRCUIT

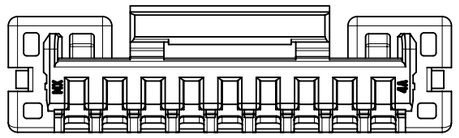

VIEW U
9極
9 CIRCUIT

△4 214526**0* 発注番号一覧 ORDER NUMBER LIST

NOT COMPLIANT			COMPLIANT		LOW-HALOGEN
BLUE	YELLOW	RED	BLACK	NATURAL (WHITE)	HOUSING COLOR
2145260904	2145260903	2145260902	2145260901	2145260900	9
2145260804	2145260803	2145260802	2145260801	2145260800	8
2145260704	2145260703	2145260702	2145260701	2145260700	7
2145260604	2145260603	2145260602	2145260601	2145260600	6
2145260504	2145260503	2145260502	2145260501	2145260500	5
2145260404	2145260403	2145260402	2145260401	2145260400	4
2145260304	2145260303	2145260302	2145260301	2145260300	3
2145260204	2145260203	2145260202	2145260201	2145260200	2
発注番号 ORDER NUMBER					極数 CIRCUIT SIZE
梱包形態：ポリ袋 PACKAGING : POLYBAG PACKAGE					

THIS DRAWING CONTAINS INFORMATION THAT IS PROPRIETARY TO MOLEX ELECTRONIC TECHNOLOGIES, LLC AND SHOULD NOT BE USED WITHOUT WRITTEN PERMISSION

DIMENSION UNITS	SCALE
mm	NTS

GENERAL TOLERANCES (UNLESS SPECIFIED)

ANGULAR TOL	±	3.0 °
4 PLACES	±	0.2
3 PLACES	±	0.2
2 PLACES	±	0.2
1 PLACE	±	0.2
0 PLACES	±	0.2

DRAFT WHERE APPLICABLE MUST REMAIN WITHIN DIMENSIONS

CURRENT REV DESC:

EC NO: 757367
DRWN: SOKUMURA01 2023/07/21
CHK'D: SAKIYAMA 2023/09/12
APPR: AIDA 2023/09/12

INITIAL REVISION:
DRWN: RTANAKA02 2020/05/13
APPR: AIDA 2022/11/28

molex

MICRO-LOCK PLUS 1.25
SINGLE ROW RECEPTACLE HOUSING TPA TYPE

PRODUCT CUSTOMER DRAWING

DOCUMENT NUMBER	DOC TYPE	DOC PART	REVISION
2145260000-SD	PSD	000	B

THIRD ANGLE PROJECTION	DRAWING	SERIES	MATERIAL NUMBER	CUSTOMER	SHEET NUMBER
	A3-SIZE	214526	SEE SHEET2	GENERAL	2 OF 3

DOCUMENT STATUS	P1	RELEASE DATE	2023/09/12 06:08:39

FORMAT: master-ib-prod-A3
REVISION: J1
DATE: 2021/05/01

3 適合製品及び各種仕様書
APPLICABLE PRODUCTS AND VARIOUS SPECIFICATIONS

梱包仕様書 PACKAGING SPECIFICATION	SPECIFICATION NUMBER
	2145269200-SPK PS 200

適合端子 APPLICABLE TERMINAL	PART NUMBER	PLATING TYPE	WIRE SIZE(AWG)
	5054311000 NOT APPLICABLE TO RETAINER	TIN	#26-30
	2145291000 APPLICABLE TO RETAINER	TIN	

適合リテーナー APPLICABLE RETAINER	SERIES NUMBER
	214528

SMT

適合嵌合相手 MATE WITH	タイプ TYPE	TIN PLATING				
		VERTICAL	RIGHT ANGLE	VERTICAL	RIGHT ANGLE	VERTICAL (FOR POTTING)
		2-9 CIRCUIT				
	シリーズ番号 SERIES NUMBER	505568	505567	204530	204529	205957
	ローハロゲン対応 LOW HALOGEN COMPLIANT	NOT COMPLIANT		COMPLIANT		
製品仕様書 PRODUCT SPECIFICATION		2145260000-PS PS 000				2145260001-PS PS 000
コネクタ取扱説明書 APPLICATION SPECIFICATION		5055650000-AS PS 000				

THROUGH HOLE

適合嵌合相手 MATE WITH	タイプ TYPE	TIN PLATING	
		VERTICAL	RIGHT ANGLE
		2-9 CIRCUIT	
	シリーズ番号 SERIES NUMBER	220097	220098
	ローハロゲン対応 LOW HALOGEN COMPLIANT	COMPLIANT	
製品仕様書 PRODUCT SPECIFICATION		2145260003-PS PS 000	
コネクタ取扱説明書 APPLICATION SPECIFICATION		5055650000-AS PS 000	

WIRE TO WIRE

適合嵌合相手 MATE WITH	タイプ TYPE	TIN PLATING	
		2-9 CIRCUIT	
	シリーズ番号 SERIES NUMBER	214525	
	ローハロゲン対応 LOW HALOGEN COMPLIANT	COMPLIANT (NATURAL, BLACK)	NOT COMPLIANT (RED, YELLOW, BLUE)
製品仕様書 PRODUCT SPECIFICATION		2145260002-PS PS 000	
コネクタ取扱説明書 APPLICATION SPECIFICATION		5055650000-AS PS 000	

製品嵌合図は各"適合嵌合相手"図面参照のこと
MATING VIEW : REFER TO EACH "MATE WITH" PART DRAWING.

THIS DRAWING CONTAINS INFORMATION THAT IS PROPRIETARY TO MOLEX ELECTRONIC TECHNOLOGIES, LLC AND SHOULD NOT BE USED WITHOUT WRITTEN PERMISSION

DIMENSION UNITS	SCALE	CURRENT REV DESC:		
mm	NTS			
GENERAL TOLERANCES (UNLESS SPECIFIED)				
ANGULAR TOL	± 3.0 °			
4 PLACES	± 0.2	EC NO: 757367		
3 PLACES	± 0.2	DRWN: SOKUMURA01	2023/07/21	
2 PLACES	± 0.2	CHK'D: SAKIYAMA	2023/09/12	
1 PLACE	± 0.2	APPR: AIDA	2023/09/12	
0 PLACES	± 0.2	INITIAL REVISION:		
		DRWN: RTANAKA02	2020/05/13	
		APPR: AIDA	2022/11/28	

molex

MICRO-LOCK PLUS 1.25
SINGLE ROW RECEPTACLE HOUSING TPA TYPE

PRODUCT CUSTOMER DRAWING

DOCUMENT NUMBER	DOC TYPE	DOC PART	REVISION
2145260000-SD	PSD	000	B

DRAFT WHERE APPLICABLE MUST REMAIN WITHIN DIMENSIONS	THIRD ANGLE PROJECTION	DRAWING	SERIES	MATERIAL NUMBER	CUSTOMER	SHEET NUMBER
		A3-SIZE	214526	SEE SHEET2	GENERAL	3 OF 3

DOCUMENT STATUS	P1	RELEASE DATE	2023/09/12 06:08:39

FORMAT: master_tb_mod-A3
REVISION: J1
DATE: 2021/05/01