GENERAL DESCRIPTION

The MCP6002 is dual CMOS operational amplifier that uses the proprietary auto-calibration technique to simultaneously provides very lowoffset voltage, near-zero drift over time and temperature.These miniature, high-precision , low quiescent current amplifiers offer high-impedance inputs that have a common-mode range 200mV beyond the rails,and rai-to-rail output that swings within 50mV of the rails,single or dual supplies as low as 1.8V(±0.9V)and up to 5.5V(±2.75V)can be used.

These devices are optimized for low voltage,single supply operation.The MCP6002 offers excellent CMRR without the crossover associated with tradltional complementary input stages.This design results in superior performance for driving analog-to-digital converters(ADC)without degradation of differential linearity.

The MCP6002 is available in the 8-pin SOPand MSOP packages.

FEATURES

- VDD range:1.8V to 5.5V
- Low Offset Voltage:0.5mV (Typical)
- Low Drift:0.65μV/C(Typical)
- Low Noise
- Quiescent Current:50μA (Total)
- Rail to Rail Input/Output
- MicroSize Packages:SOP8 and MSOP8

APPLICATIONS

- Transducers
- Temperature Measurement
- Electronic Scales
- Medical instrumentatior
- Handheld Test Equipment

Reference News

PIN CONFIGURATION	Marking
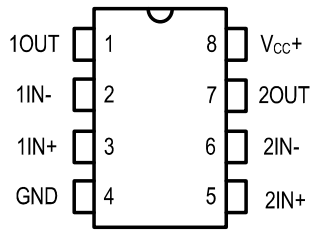 SOP8/MSOP8	 SOP8/MSOP8

Note:***=batch

PIN DESCRIPTION

Pin Name	Pin Number	Description
10UT	1	Output 1
1IN-	2	Inverting input 1
1IN+	3	Noninverting input 1
GND	4	Negative(lowest)power supply
2IN+	5	Noninverting input 2
2IN-	6	Inverting input 2
2OUT	7	Output 2
Vcc+	8	Positive(highest)power supply

SIMPLIFIED SCHEMATIC

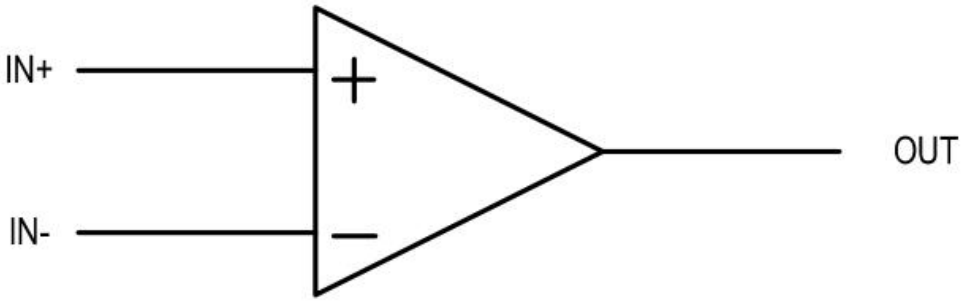

Figure 1.Simplified Schematic

ABSOLUTE MAXIMUM RATINGS

Thermal Resistance θ Jc.....130°℃/W
Supply Voltage 2.1to 5.5V
Signal Input Terminals Voltage ... -0.1 to (V+)+0.1V
Operating Junction Temperature.....150℃
Operating Temperature Range ..... -40°C to 85℃
Storage Temperature .....-65°C to 150℃

REEL SPECIFICATION

P/N	PKG	QTY
MCP6002T-I/SN	SOP-8	2500PCS
MCP6002T-I/MS	MSOP-8	2500PCS

ELECTRICAL CHARACTERISTICS

(AtTA=25℃,RL=10k to Vs/2,and Vour=Vs/2,unless

PARAMETER	CONDITIONS	MIN	TYP	MAX	UNIT
Input Offset Voltage	Vs=±2.5V	-2	0.5	2	mV
nput Offset Voltage Drift	TA=-40℃ to 85℃		0.65		μV/℃
Power Supply Rejection Ratio	Vs =1.8V to 5.5V TA=- -40 to 85℃	80	90		dB
Input Bias Curren	TA=25℃		2		pA
Input Offset Curren			1		pA
Common-mode Voltage Range		(V-)-0.1		(V+)+0.1	V
Common-mode Rejectior Ratio	(V-)-0.1<Vcm<(V+)+0.' TA=-40℃ to 85℃	80	95		dB
Open Loop Voltage Gain	(V-)+100mV<Vo<(V+)-10 0mV RL=10k TA=-40℃to 85℃	80	100		dB
Gain-bandwidth product	CL=120pF		1.5		MHz
Slew Rate	G=+1		1.2		V/μs
Specified Voltage Range		1.8		5.5	V
Quiescent Current (Total)	lo=0A		50		μA
Operating Temperature Range		-40		85	℃
Storage Temperature Range		-65		150	℃

TYPICAL PERFORMANCE CHARACTERISTICS

(At T_A = 25°C, V_S=5V, C_L=20pF, unless otherwise noted.)

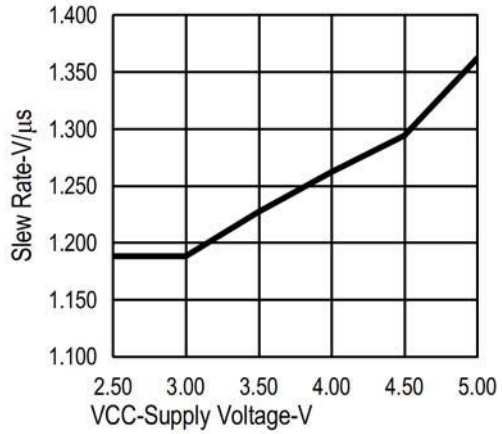

Figure 2. Slew Rate vs Supply Voltage

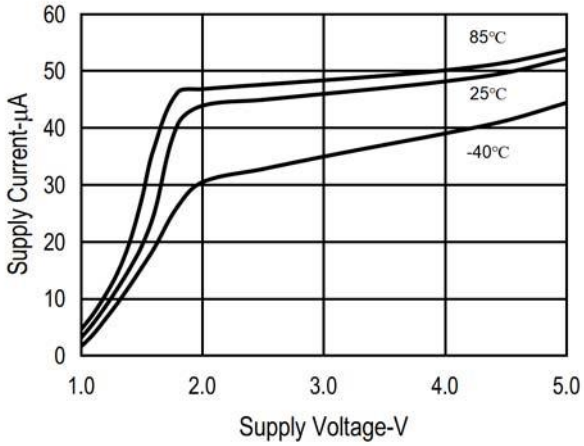

Figure 3. Supply Current vs Supply Voltage

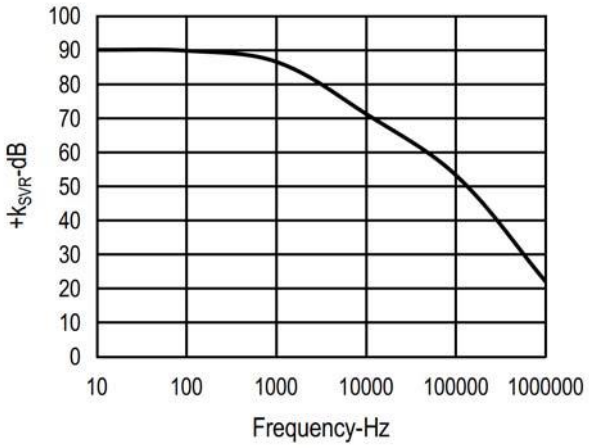

Figure 4. +k_{SVR} vs Frequency

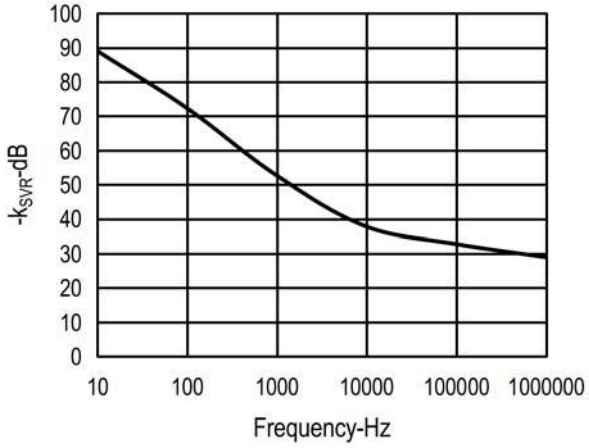

Figure 5. -k_{SVR} vs Frequency

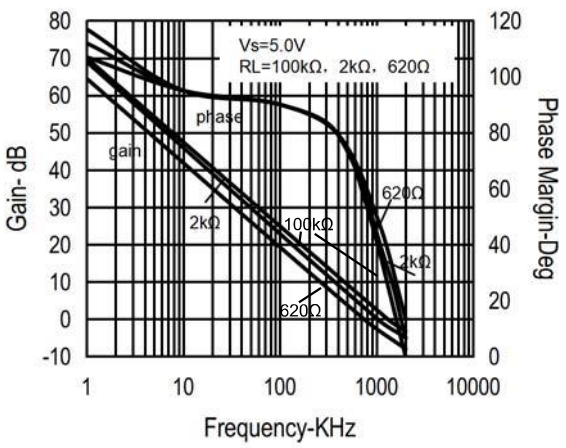

Figure 6. Frequency Response vs Resistive Load

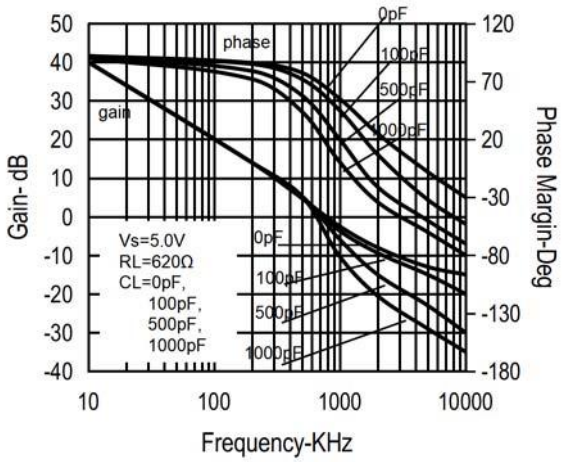

Figure 7. Frequency Response vs Capacitive Load

TYPICAL PERFORMANCE CHARACTERISTICS

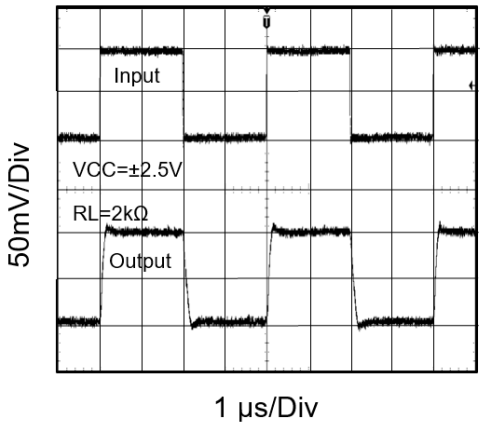

Figure 8. Noninverting Small-Signal Pulse Response

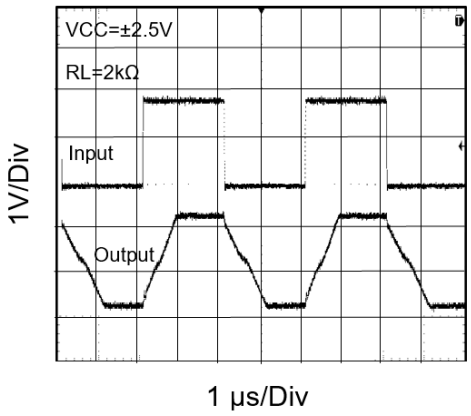

Figure 9. Noninverting Large-Signal Pulse Response

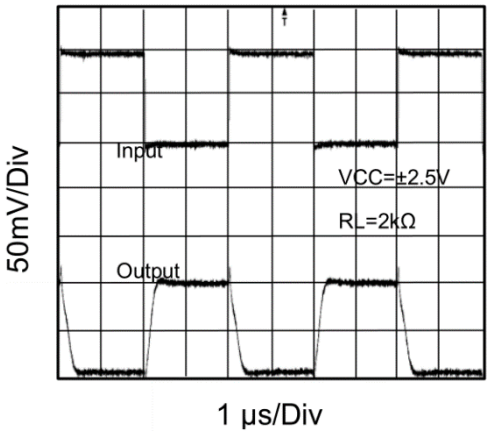

Figure 10. Inverting Small-Signal Pulse Response

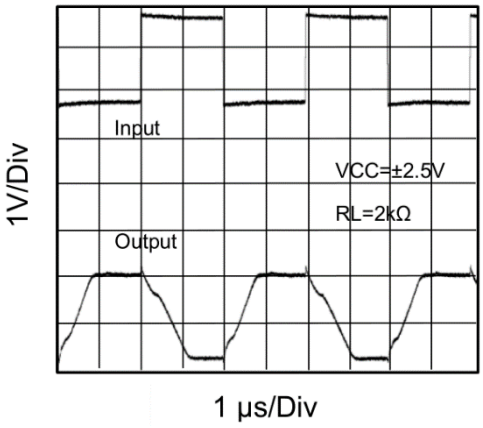

Figure 11. Inverting Large-Signal Pulse Response

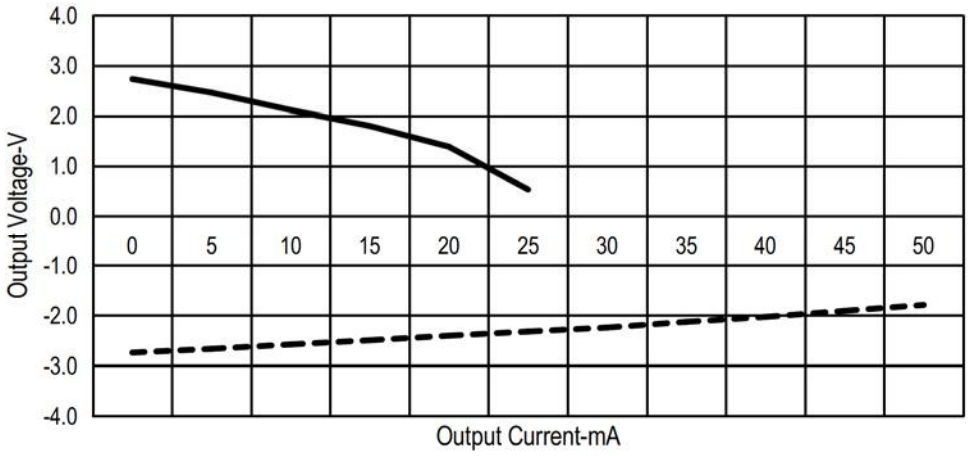

Figure 12. Output Voltage vs Output Current

FUNCTIONAL DESCRIPTION

Operating Voltage

The MCP6002 device is fully specified and ensured for operation from 1.8V to 5.5V . In addition,many specifications apply from -40°C to 85℃. Parameters that vary significantly with operating voltages or temperature are shown in the Typical Characteristics graphs

Unity-Gain Bandwidth

The unity-gain bandwidth is the frequency up to which an amplifier with a unity gain may be operated without greatly distorting the signal . The MCP6002 device has a 1.5-MHz unity-gain bandwidth.

Slew Rate

The slew rate is the rate at which an operational amplifier can change its output when there is a change on the input.The MCP6002 deviceshave a 1.2-V/μs slew rate.The MCP6002 is characterized to perform with this technique ;the recommended resistor value is approximately 20k.

Device Functional Modes

The MCP6002 device has a single functional mode.The device is powered on as long as the power supply voltage is between 1.8V(±0.9V)and 5.5V(±2.75V).

APPLICATIONS INFORMATION

The MCP6002 is a unity-gain stable,precision operational amplifier with very low offset voltage drift; these-devices are also free from output phase reversal.Applications with noisy or high-impedance power supplies require decoupling capacitors close to the device power-supply pins.In most cases, 0.1uFcapacitors are adequate.

Typical Application

Figure 13 shows a simple circuit to convert a single-ended input into differential output The MCP6002 could be used to build this circuit.The circuit is composed of two amplifiers.
One amplifier acts as a buffer and creates a voltage , Vour+ . The second amplifier inverts the input and adds a reference voltage to generate Vour- . Both Vour+ and Vour-range from 0.5 to 2V . The diference, VDIFF,is the difference between VouT+and VouT-.

Detailed Design Procedure

Linearity over the input range is key for good dc accuracy .The common mode input range and the output swing limitations determine the linearity . In general , an amplifier with rail-to-rail input and output swing is required . Bandwidth is a key concern for this design.Because MCP6002 has a bandwidth of 1M Hz,this circuit will only be able to process signals with frequencies of less than 1MHz.

Because the transfer function of Vour-is heavily reliant on resistors(R1,R2,R3,and R4),use resistors with low tolerances to maximize performance and minimize error.This design used resistors with resistance values of 36k with tolerances measured to be within 2%.If the noise of the system is a key parameter,the user can select smaller resistance values (6kor lower)to keep the overall system noise low. This ensures that the noise from the resistors is lower than the amplifier noise.

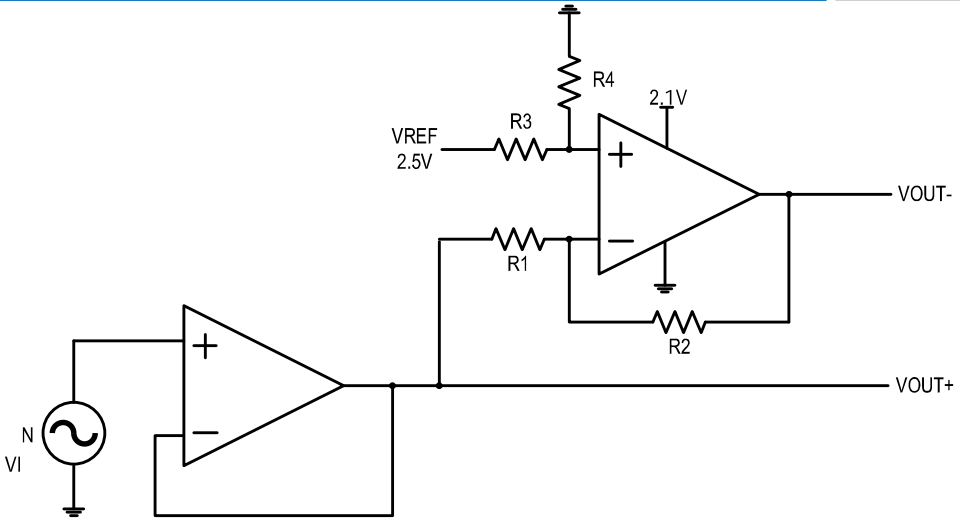

Figure 13. Schematic for Single-Ended Input to Differential Output Conversion

LAYOUT

Use good PCB layout practices for best operational performance of the device,including:

- Keep the length of input traces as short as possible.
- Run the input traces as far away from the supply lines as possible to reduce parasitic coupling.
- Place components close to device and to each other to reduce parasific capacitance and parasitic errors.
- Use low-ESR,ceramic bypass capacitors to reduce the coupled noise by providing low impedance power sources local to the analog circuitry.
- Grounding for analog and digital portions of circuitry separately to suppresse the noise.

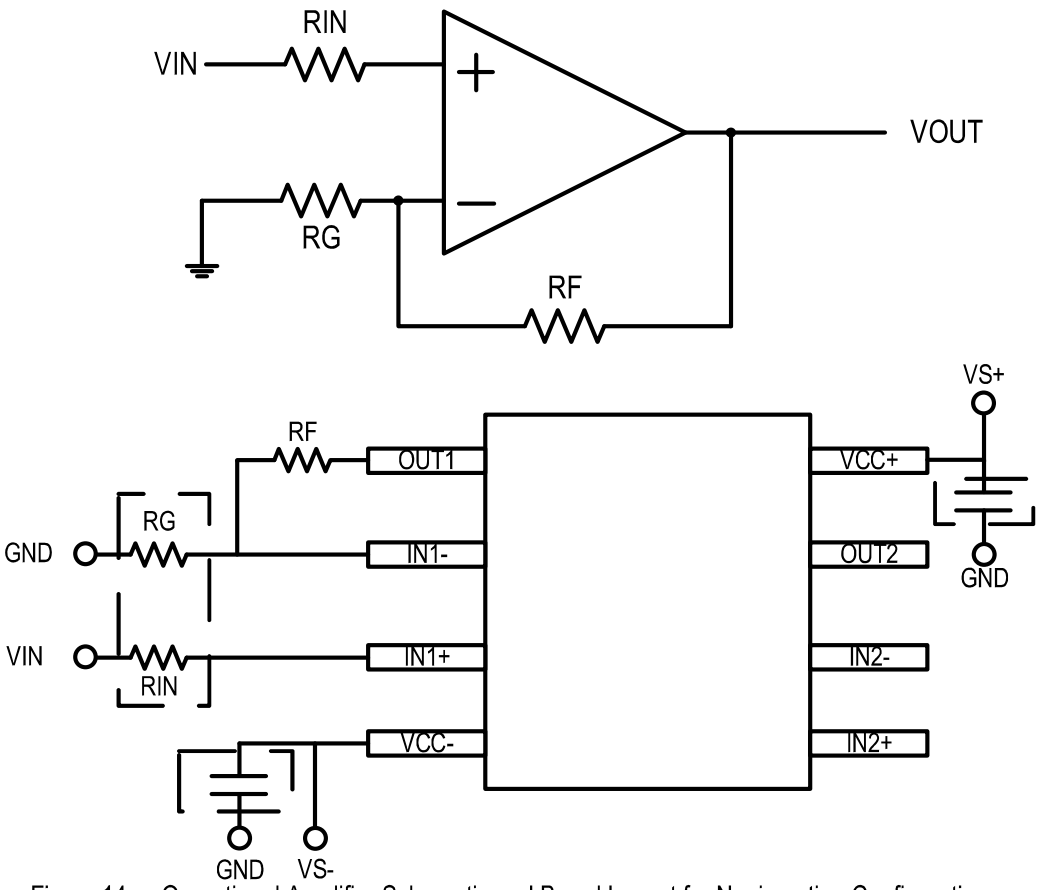

Figure 14. Operational Amplifier Schematic and Board Layout for Noninverting Configuration

SOP-8

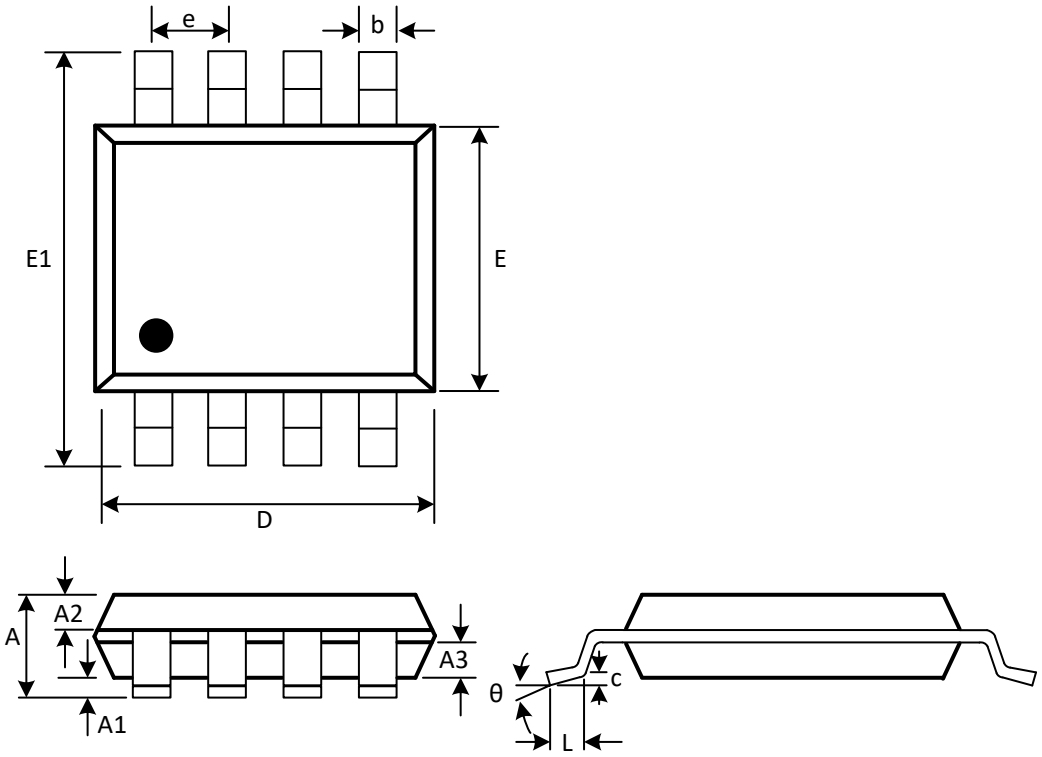

(Unit: mm)

Symbol	Min	Max
A	1.300	1.600
A1	0.050	0.200
A2	0.550	0.650
A3	0.550	0.650
b	0.356	0.456
c	0.203	0.233
D	4.800	5.000
e	1.270(BSC)	
E	3.800	4.000
E1	5.800	6.200
L	0.400	0.800
θ	0°	8°

MSOP-8

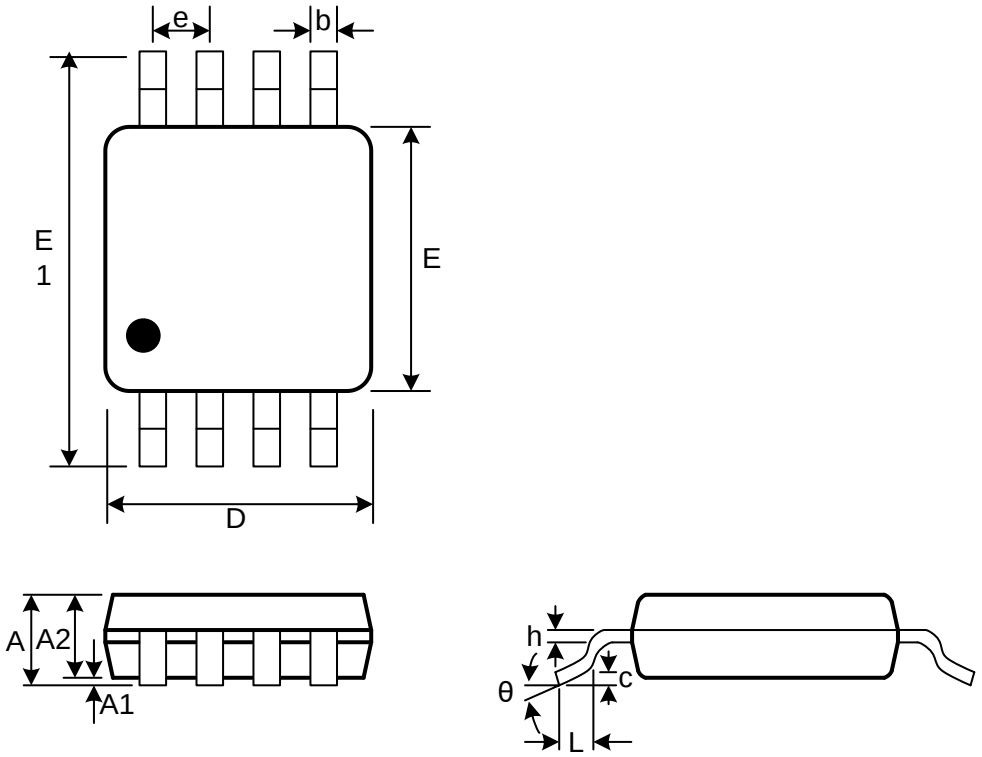

(Unit: mm)

Symbol	Min	Max
A		1.100
A1	0.050	0.150
A2		0.950
b	0.250	0.380
c	0.250	
D	2.900	3.100
e	0.650(BSC)	
E	2.900	3.100
E1	4.750	5.050
h	0.130	0.230
L	0.400	0.700
θ	0°	8°