# SISA18BDN-T1-GE3

N-SGT Enhancement Mode MOSFET

## Description

The SISA18BDN-T1-GE3 use advanced SGT MOSFET technology to provide low RDS(ON), low gate charge, fast switching and excellent avalanche characteristics. This device is specially designed to get better ruggedness.

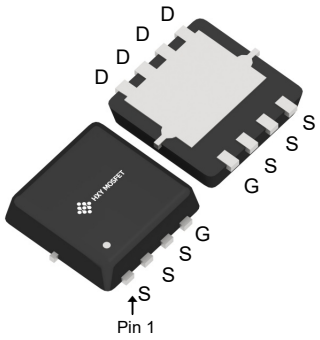


DFN3X3-8L

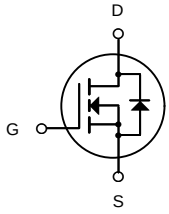


N-Channel MOSFET

## General Features

$V_{DS}$ =30V $I_D$ = 40A

$R_{DS(ON)}$ < 6.3mΩ@ $V_{GS}$=10V

## Applications

Consumer electronic power supply Motor control

Synchronous-rectification Isolated DC

Synchronous-rectification applications

## Package Marking and Ordering Information

| Product ID | Pack | Brand | Qty(PCS) |
|---|---|---|---|
| SISA18BDN-T1-GE3 | DFN3X3-8L | HXY MOSFET | 5000 |

## Absolute Maximum Ratings ($T_C$=25°C unless otherwise specified)

| Symbol | Parameter | Rating | Units |
|---|---|---|---|
| $V_{DS}$ | Drain-Source Voltage | 30 | V |
| $V_{GS}$ | Gate-Source Voltage | ±20 | V |
| $I_D$@$T_C$=25°C | Continuous Drain Current, $V_{GS}$ @ 10V[1] | 40 | A |
| $I_D$@$T_C$=100°C | Continuous Drain Current, $V_{GS}$ @ 10V[1] | 28 | A |
| $I_D$@$T_A$=25°C | Continuous Drain Current, $V_{GS}$ @ 10V[1] | 27 | A |
| $I_D$@$T_A$=70°C | Continuous Drain Current, $V_{GS}$ @ 10V[1] | 24 | A |
| $I_{DM}$ | Pulsed Drain Current[2] | 135 | A |
| EAS | Single Pulse Avalanche Energy[3] | 29.8 | mJ |
| $I_{AS}$ | Avalanche Current | 27 | A |
| $P_D$@$T_C$=25°C | Total Power Dissipation[4] | 30 | W |
| $T_{STG}$ | Storage Temperature Range | -55 to 150 | °C |
| $T_J$ | Operating Junction Temperature Range | -55 to 150 | °C |
| $R_{\theta JA}$ | Thermal Resistance Junction-ambient [1] | 50 | °C/W |
| $R_{\theta JC}$ | Thermal Resistance Junction-Case[1] | 4.6 | °C/W |

## Electrical Characteristics(TJ=25°C unless otherwise noted)

| Symbol | Parameter | Conditions | Min. | Typ. | Max. | Unit |
|---|---|---|---|---|---|---|
| $BV_{DSS}$ | Drain-Source Breakdown Voltage | $V_{GS}$=0V , $I_D$=250uA | 30 | --- | --- | V |
| $R_{DS(ON)}$ | Static Drain-Source On-Resistance[2] | $V_{GS}$=10V , $I_D$=20A | --- | 5 | 6.3 | mΩ |
| | | $V_{GS}$=4.5V , $I_D$=15A | --- | 6.9 | 9 | |
| $V_{GS(th)}$ | Gate Threshold Voltage | $V_{GS}$=$V_{DS}$ , $I_D$ =250uA | 1.2 | --- | 2.5 | V |
| $I_{DSS}$ | Drain-Source Leakage Current | $V_{DS}$=24V , $V_{GS}$=0V , $T_J$=25°C | --- | --- | 1 | uA |
| | | $V_{DS}$=24V , $V_{GS}$=0V , $T_J$=55°C | --- | --- | 5 | |
| $I_{GSS}$ | Gate-Source Leakage Current | $V_{GS}$=±20V , $V_{DS}$=0V | --- | --- | ±100 | nA |
| gfs | Forward Transconductance | $V_{DS}$=5V , $I_D$=20A | --- | 67 | --- | S |
| $R_g$ | Gate Resistance | $V_{DS}$=0V , $V_{GS}$=0V , f=1MHz | --- | 1.7 | --- | Ω |
| $Q_g$ | Total Gate Charge (4.5V) | $V_{DS}$=15V , $V_{GS}$=4.5V , $I_D$=15A | --- | 8 | --- | nC |
| $Q_{gs}$ | Gate-Source Charge | | --- | 2.4 | --- | |
| $Q_{gd}$ | Gate-Drain Charge | | --- | 3.2 | --- | |
| $T_{d(on)}$ | Turn-On Delay Time | $V_{DD}$=15V , $V_{GS}$=10V , $R_G$=3.3Ω $I_D$=15A | --- | 7.1 | --- | ns |
| $T_r$ | Rise Time | | --- | 40 | --- | |
| $T_{d(off)}$ | Turn-Off Delay Time | | --- | 15 | --- | |
| $T_f$ | Fall Time | | --- | 6 | --- | |
| $C_{iss}$ | Input Capacitance | $V_{DS}$=15V , $V_{GS}$=0V , f=1MHz | --- | 814 | --- | pF |
| $C_{oss}$ | Output Capacitance | | --- | 498 | --- | |
| $C_{rss}$ | Reverse Transfer Capacitance | | --- | 41 | --- | |
| $I_S$ | Continuous Source Current[1,6] | $V_G$=$V_D$=0V , Force Current | --- | --- | 40 | A |
| $V_{SD}$ | Diode Forward Voltage[2] | $V_{GS}$=0V , $I_S$=1A , $T_J$=25°C | --- | --- | 1 | V |
| $t_{rr}$ | Reverse Recovery Time | $I_F$=20A , di/dt=100A/μs , $T_J$=25°C | --- | 15 | --- | nS |
| $Q_{rr}$ | Reverse Recovery Charge | | --- | 25 | --- | nC |

Note :
1.The data tested by surface mounted on a 1 inch$^2$ FR-4 board with 2OZ copper.
2.The data tested by pulsed , pulse width ≦ 300us , duty cycle ≦ 2%
3.The EAS data shows Max. rating . The test condition is $V_{DD}$=25V,$V_{GS}$=10V,L=0.1mH,$I_{AS}$=24A
4.The power dissipation is limited by 150°C junction temperature
5.The data is theoretically the same as $I_D$ and $I_{DM}$ , in real applications , should be limited by total power dissipation.

## Typical Characteristics

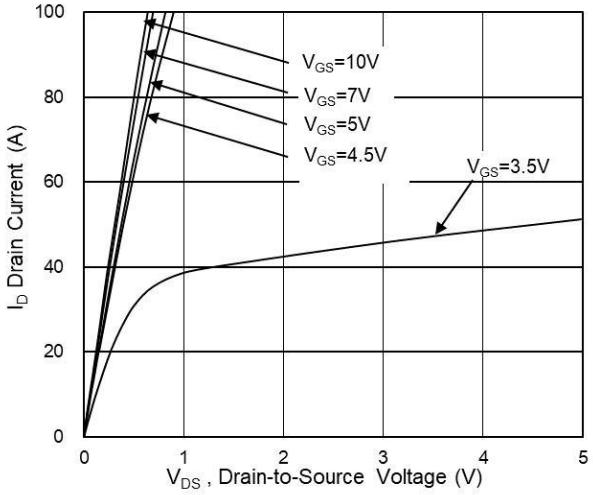


**Fig.1 Typical Output Characteristics**

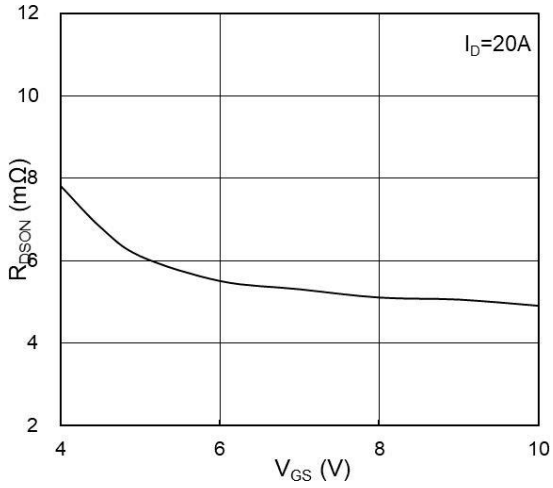


**Fig.2 On-Resistance vs G-S Voltage**

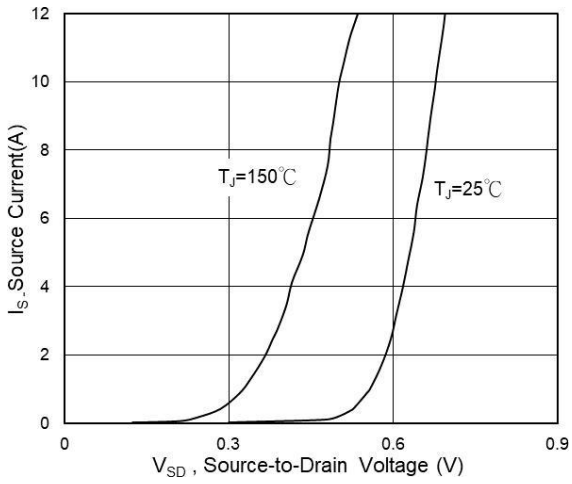


**Fig.3 Source Drain Forward Characteristics**

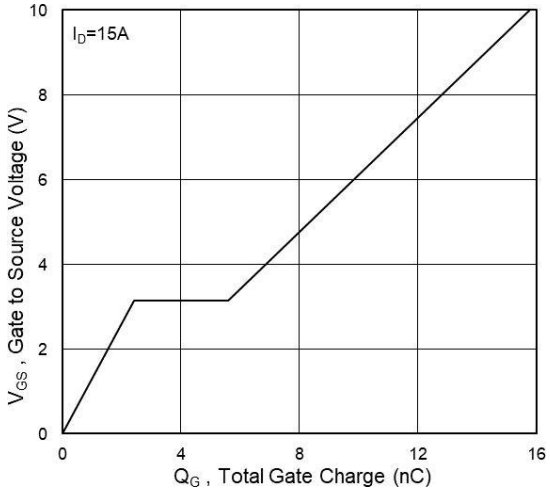


**Fig.4 Gate-Charge Characteristics**

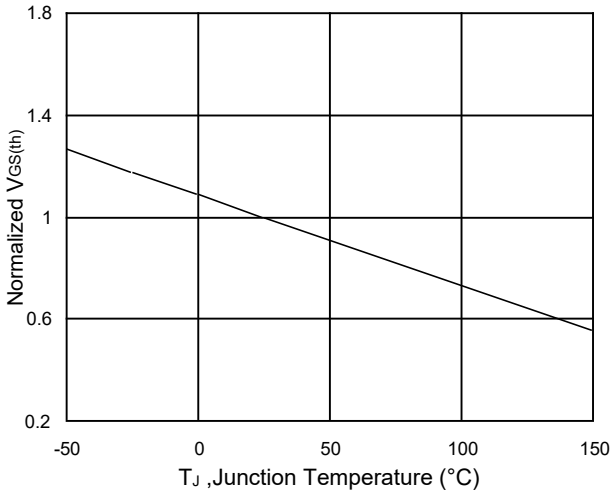


**Fig.5 Normalized $V_{GS(th)}$ vs $T_J$**

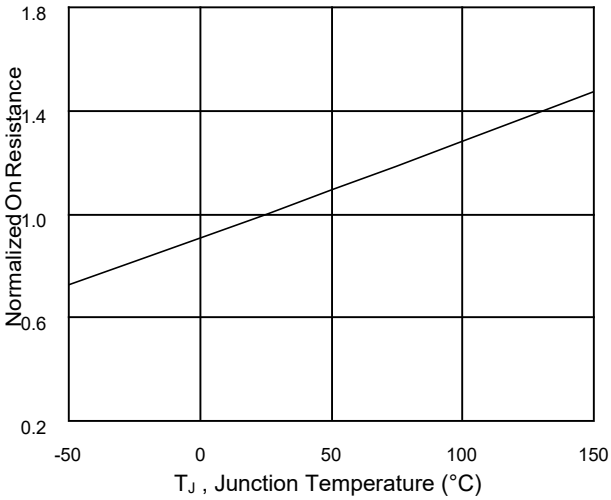


**Fig.6 Normalized $R_{DSON}$ vs $T_J$**

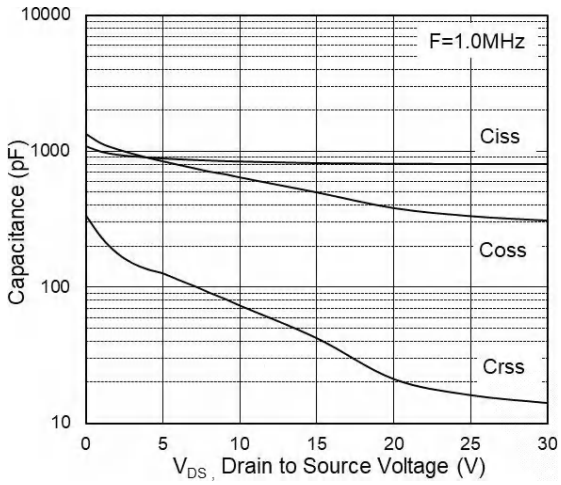


**Fig.7 Capacitance**

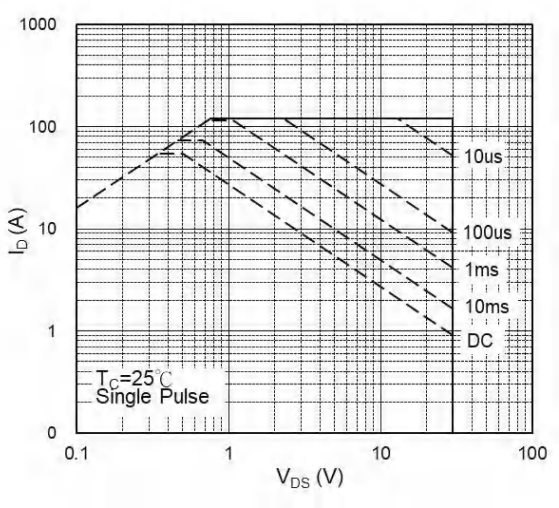


**Fig.8 Safe Operating Area**

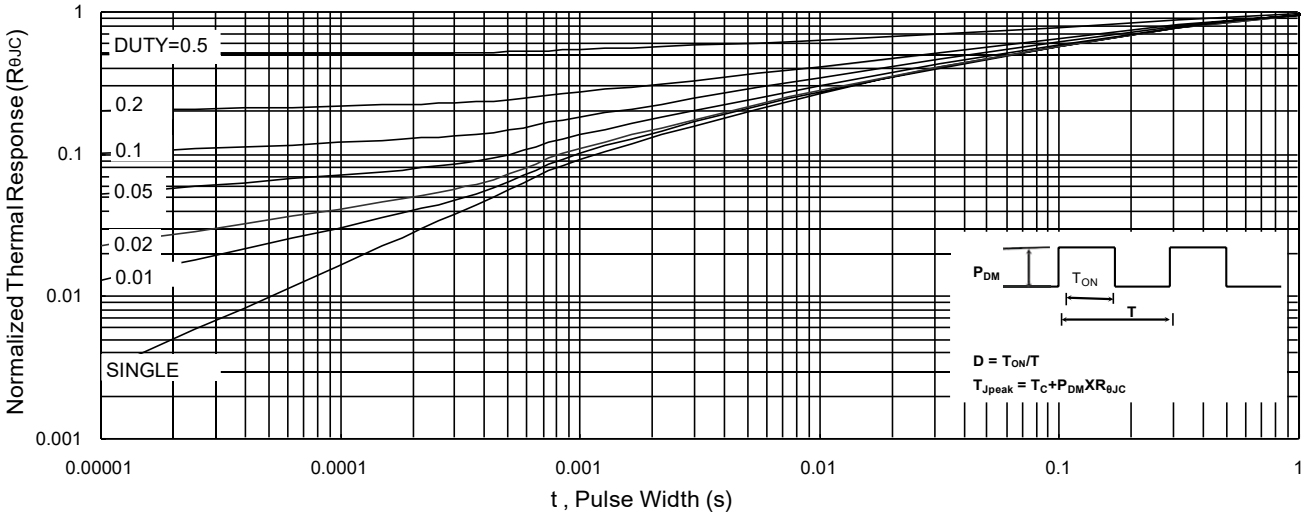


**Fig.9 Normalized Maximum Transient Thermal Impedance**

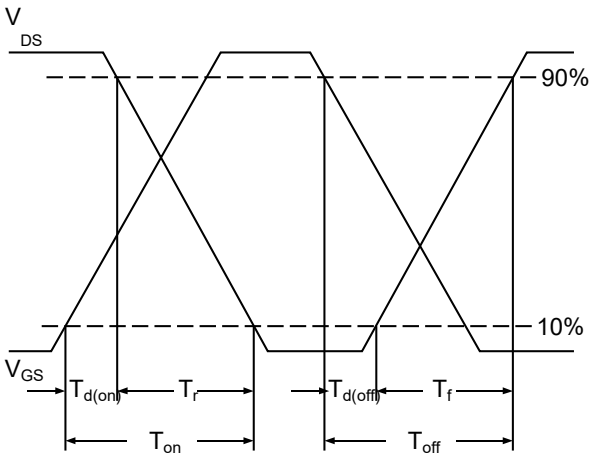


**Fig.10 Switching Time Waveform**

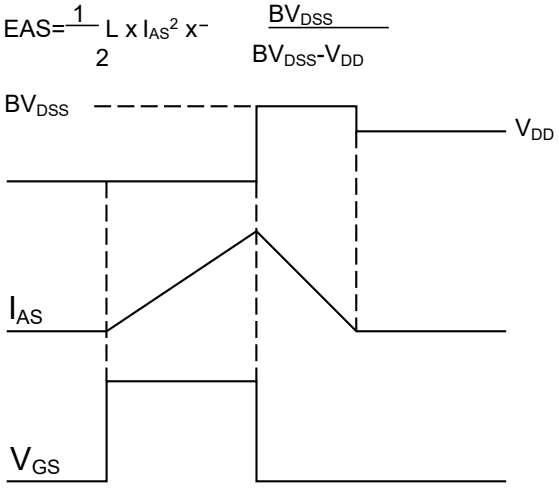


**Fig.11 Unclamped Inductive Switching Waveform**

## DFN3X3-8L Package Information

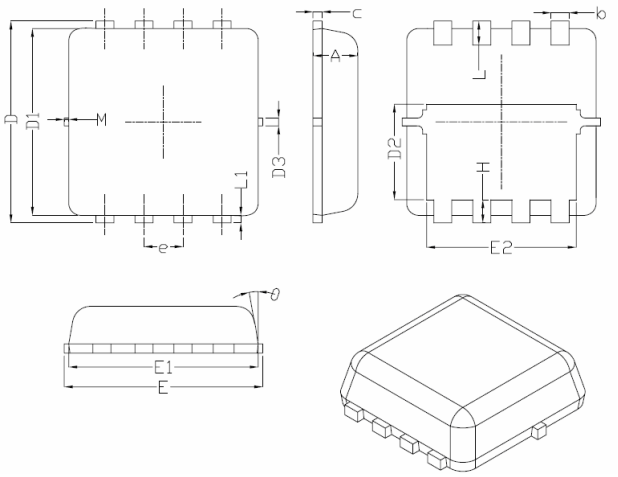


| Symbol | Dimensions In Millimeters | | |
|---|---|---|---|
| | Min. | Nom. | Max. |
| A | 0.70 | 0.75 | 0.80 |
| b | 0.25 | 0.30 | 0.35 |
| c | 0.10 | 0.15 | 0.25 |
| D | 3.25 | 3.35 | 3.45 |
| D1 | 3.00 | 3.10 | 3.20 |
| D2 | 1.48 | 1.58 | 1.68 |
| D3 | - | 0.13 | - |
| E | 3.20 | 3.30 | 3.40 |
| E1 | 3.00 | 3.15 | 3.20 |
| E2 | 2.39 | 2.49 | 2.59 |
| e | 0.65BSC | | |
| H | 0.30 | 0.39 | 0.50 |
| L | 0.30 | 0.40 | 0.50 |
| L1 | - | 0.13 | - |
| M | * | * | 0.15 |
| θ | | 10° | 12° |

## Attention

■ Any and all HUA XUAN YANG ELECTRONICS products described or contained herein do not have specifications that can handle applications that require extremely high levels of reliability, such as life-support systems, aircraft's control systems, or other applications whose failure can be reasonably expected to result in serious physical and/or material damage. Consult with your HUA XUAN YANG ELECTRONICS representative nearest you before using any HUA XUAN YANG ELECTRONICS products described or contained herein in such applications.

■ HUA XUAN YANG ELECTRONICS assumes no responsibility for equipment failures that result from using products at values that exceed, even momentarily, rated values (such as maximum ratings, operating condition ranges, or other parameters) listed in products specifications of any and all HUA XUAN YANG ELECTRONICS products described or contained herein.

■ Specifications of any and all HUA XUAN YANG ELECTRONICS products described or contained herein stipulate the performance, characteristics, and functions of the described products in the independent state, and are not guarantees of the performance, characteristics, and functions of the described products as mounted in the customer's products or equipment. To verify symptoms and states that cannot be evaluated in an independent device, the customer should always evaluate and test devices mounted in the customer's products or equipment.

■ HUA XUAN YANG ELECTRONICS CO.,LTD. strives to supply high-quality high-reliability products. However, any and all semiconductor products fail with some probability. It is possible that these probabilistic failures could
give rise to accidents or events that could endanger human lives, that could give rise to smoke or fire, or that could cause damage to other property. When designing equipment, adopt safety measures so that these kinds of accidents or events cannot occur. Such measures include but are not limited to protective circuits and error prevention circuits for safe design, redundant design, and structural design.

■ In the event that any or all HUA XUAN YANG ELECTRONICS products(including technical data, services) described or contained herein are controlled under any of applicable local export control laws and regulations, such products must not be exported without obtaining the export license from the authorities concerned in accordance with the above law.

■ No part of this publication may be reproduced or transmitted in any form or by any means, electronic or mechanical, including photocopying and recording, or any information storage or retrieval system, or otherwise, without the prior written permission of HUA XUAN YANG ELECTRONICS CO.,LTD.

■ Information (including circuit diagrams and circuit parameters) herein is for example only ; it is not guaranteed for volume production. HUA XUAN YANG ELECTRONICS believes information herein is accurate and reliable, but no guarantees are made or implied regarding its use or any infringements of intellectual property rights or other rights of third parties.

■ Any and all information described or contained herein are subject to change without notice due to product/technology improvement, etc. When designing equipment, refer to the "Delivery Specification" for the HUA XUAN YANG ELECTRONICS product that you intend to use.

# Unikeyic Electronics

Global Electronic Components Distributor

Click to view pricing, inventory, delivery, and lifecycle information:

## HXY MOSFET:

HESDNC5VB1AF-B HOPA2340UA P6SMB33CA HT7540-1 MAX487ESA MMBT3904T US2M SD15C
DTC143ZE P6SMB200A TPSMB28A-VR BZT52C3V3S P6SMB36CA HXY2300MI HAD8542ARZ
SQJA04EP-T1_BE3 SS1045 SS5150B PESD5V0S1BB SS10100 HXY2101EI HXY8205ES HC4D20120A
HMCP602-I/SN HT7150 IRLML6246PBF HC3D10170A SS510C TPSMB100CA-VR BZT52C13