REV.	ECN NO.	DATE	SIGN	DESCRIPTION
B	LE315C0392~395	2015/12/14	Ruru	Change Logo & Note & Ball-marker
C	C190631	2019/04/29	Eric	Change lock point direction

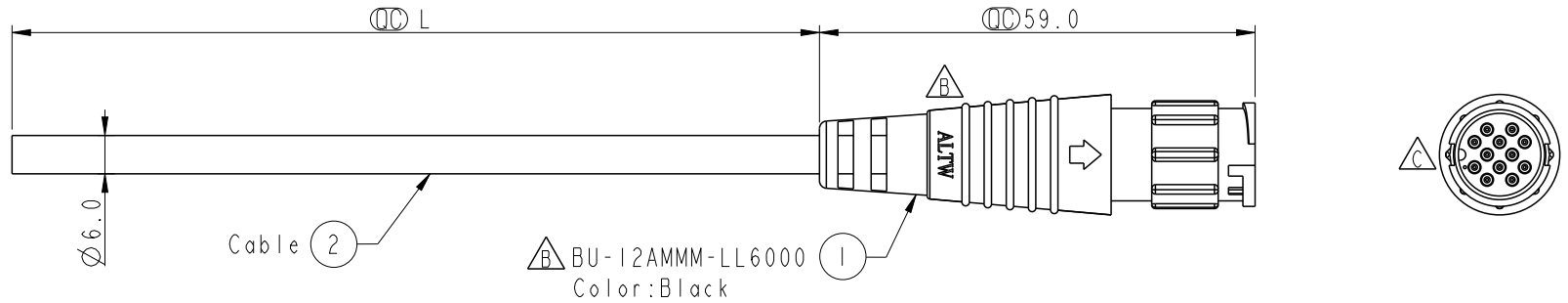

12	Light Green	淺綠
11	Purple	紫
10	Orange	橙
9	Black	黑
8	Red	紅
7	Pink	粉紅
6	Gray	灰
5	Yellow	黃
4	Green	綠
3	White	白
2	Blue	藍
1	Brown	棕
Conn	Wire Color	
Pin Out		

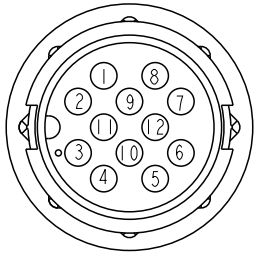

Pin Assignments
Front View前視圖

ALTW
CONFIDENTIAL
2019-04-29
R&D DEPT.

B Note:
* QC Important Dimension.
* Waterproof Rate : IP66
* Connectrog: Nylon+GF, Black
* Male Pin: Copper Alloy, Gold Plated
* Cable: UL2464 26AWG*12C+Drain+Al/My
  UV Resistant, OD=6.0mm, Black
* Cable Length Tolerance: 01M: ±40mm
  02~05M: ±60mm
  06M~10M: ±100mm
  11M~30M: ±200mm
  31M~99M: ±500mm

UNIT:mm

TOLERANCE
± 0.5mm

TITLE: Lock Type Cable Assembly-180° 12Pin Male Connector Male Pin(2A)

SCALE 1:1 | SIZE A4 | SHEET 1 OF 1
REV. C | WC-REV. A.3 | QC: Inspection item

Amphenol LTW
安費諾亮泰企業股份有限公司

ITEM NO	DRAWN BY: Eric	DATE: 2019/04/29
DWG NO: BU-12AMMM-LL6AXX	CHECKED BY: Jane	DATE: 2019/04/29
CUSTOMER: ALTW	APPROVED BY: Neo	DATE: 2019/04/29

WI0814-03-RW01A2

THIS DOCUMENT IS SUBJECT TO CHANGE WITHOUT NOTICE. IT IS CONFIDENTIAL AND A PROPERTY OF Amphenol LTW. DISCLOSURE TO THIRD PARTY HAS TO BE AUTHORIZED BY Amphenol LTW.

Mouser Electronics

Authorized Distributor

Click to View Pricing, Inventory, Delivery & Lifecycle Information:

Amphenol:

BU-12AMMM-LL6A01 BU-12AMMM-LL6A10 BU-12AMMM-LL6A02 BU-12AMMM-LL6A05