FAIRCHILD SEMICONDUCTOR™

September 2000
Revised August 2001

74LCXZ16244
Low Voltage 16-Bit Buffer/Line Driver with 5V Tolerant Inputs and Outputs

General Description

The LCXZ16244 contains sixteen non-inverting buffers with 3-STATE outputs designed to be employed as a memory and address driver, clock driver, or bus oriented transmitter/receiver. The device is nibble controlled. Each nibble has separate 3-STATE control inputs which can be shorted together for full 16-bit operation.

When V_{CC} is between 0 and 1.5V, the LCXZ12644 is in the high impedance state during power up or power down. This places the outputs in high impedance (Z) state preventing intermittent low impedance loading or glitching in bus oriented applications.

The LCXZ16244 is designed for low voltage (2.7V or 3.3V) V_{CC} applications with capability of interfacing to a 5V signal environment.

The LCXZ16244 is fabricated with an advanced CMOS technology to achieve high speed operation while maintaining CMOS low power dissipation.

Features

- 5V tolerant inputs and outputs
- Guaranteed power up/down high impedance
- Supports live insertion/withdrawal
- 2.7V–3.6V V_{CC} specifications provided
- 4.5 ns t_{PD} max (V_{CC} = 3.0V), 20 µA I_{CC} max
- ±24 mA output drive (V_{CC} = 3.0V)
- Implements patented noise/EMI reduction circuitry
- Latch-up performance exceeds 500 mA
- ESD performance:
  - Human body model > 2000V
  - Machine model > 200V
- Also packaged in plastic Fine-Pitch Ball Grid Array (FBGA) (Preliminary)

Ordering Code:

Order Number	Package Number	Package Description
74LCXZ16244GX (Note 1)	BGA54A (Preliminary)	54-Ball Fine-Pitch Ball Grid Array (FBGA), JEDEC MO-205, 5.5mm Wide [TAPE and REEL]
74LCXZ16244MEA (Note 2)	MS48A	48-Lead Small Shrink Outline Package (SSOP), JEDEC MO-118, 0.300" Wide
74LCXZ16244MTD (Note 2)	MTD48	48-Lead Thin Shrink Small Outline Package (TSSOP), JEDEC MO-153, 6.1mm Wide

Note 1: BGA package available in Tape and Reel only.

Note 2: Devices also available in Tape and Reel. Specify by appending the suffix letter "X" to the ordering code.

Logic Symbol

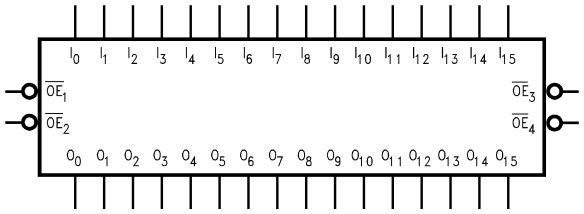

© 2001 Fairchild Semiconductor Corporation

Connection Diagrams

Pin Assignment for SSOP and TSSOP

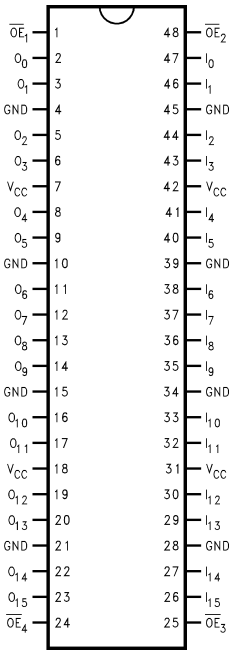

Pin Assignment for FBGA

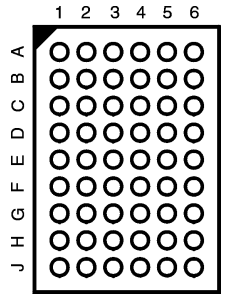

(Top Thru View)

Pin Descriptions

Pin Names	Description
$\overline{OE}_n$	Output Enable Input (Active LOW)
I_0–I_{15}	Inputs
O_0–O_{15}	Outputs
NC	No Connect

FBGA Pin Assignments

	1	2	3	4	5	6
A	O_0	NC	$\overline{OE}_1$	$\overline{OE}_2$	NC	I_0
B	O_2	O_1	NC	NC	I_1	I_2
C	O_4	O_3	V_{CC}	V_{CC}	I_3	I_4
D	O_6	O_5	GND	GND	I_5	I_6
E	O_8	O_7	GND	GND	I_7	I_8
F	O_{10}	O_9	GND	GND	I_9	I_{10}
G	O_{12}	O_{11}	V_{CC}	V_{CC}	I_{11}	I_{12}
H	O_{14}	O_{13}	NC	NC	I_{13}	I_{14}
J	O_{15}	NC	$\overline{OE}_4$	$\overline{OE}_3$	NC	I_{15}

Truth Tables

Inputs		Outputs
$\overline{OE}_1$	I_0–I_3	O_0–O_3
L	L	L
L	H	H
H	X	Z

Inputs		Outputs
$\overline{OE}_2$	I_4–I_7	O_4–O_7
L	L	L
L	H	H
H	X	Z

Inputs		Outputs
$\overline{OE}_3$	I_8–I_{11}	O_8–O_{11}
L	L	L
L	H	H
H	X	Z

Inputs		Outputs
$\overline{OE}_4$	I_{12}–I_{15}	O_{12}–O_{15}
L	L	L
L	H	H
H	X	Z

H = HIGH Voltage Level
L = LOW Voltage Level
X = Immaterial
Z = High Impedance

Functional Description

The LCXZ16244 contains sixteen non-inverting buffers with 3-STATE standard outputs. The device is nibble (4 bits) controlled with each nibble functioning identically, but independent of the other. The control pins can be shorted together to obtain full 16-bit operation. The 3-STATE outputs are controlled by an Output Enable ($\overline{OE}_n$) input for each nibble. When $\overline{OE}_n$ is LOW, the outputs are in 2-state mode. When $\overline{OE}_n$ is HIGH, the outputs are in the high impedance mode, but this does not interfere with entering new data into the inputs.

Logic Diagram

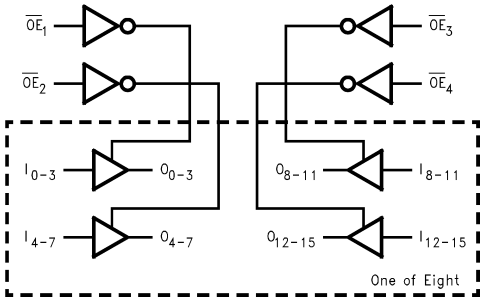

Absolute Maximum Ratings(Note 3)

Symbol	Parameter	Value	Conditions	Units
V_{CC}	Supply Voltage	−0.5 to +7.0		V
V_I	DC Input Voltage	−0.5 to +7.0		V
V_O	DC Output Voltage	−0.5 to +7.0 −0.5 to V_{CC} + 0.5	Output in 3-STATE or V_{CC} = 0–1.5V Output in HIGH or LOW State (Note 4)	V
I_{IK}	DC Input Diode Current	−50	V_I < GND	mA
I_{OK}	DC Output Diode Current	−50 +50	V_O < GND V_O > V_{CC}	mA
I_O	DC Output Source/Sink Current	±50		mA
I_{CC}	DC Supply Current per Supply Pin	±100		mA
I_{GND}	DC Ground Current per Ground Pin	±100		mA
T_{STG}	Storage Temperature	−65 to +150		°C

Recommended Operating Conditions (Note 5)

Symbol	Parameter		Min	Max	Units
V_{CC}	Supply Voltage	Operating	2.7	3.6	V
V_I	Input Voltage		0	5.5	V
V_O	Output Voltage	HIGH or LOW State	0	V_{CC}	V
		3-STATE or V_{CC} = OFF	0	5.5	
I_{OH}/I_{OL}	Output Current	V_{CC} = 3.0V – 3.6V		±24	mA
		V_{CC} = 2.7V – 3.0V		±12	
T_A	Free-Air Operating Temperature		−40	85	°C
$\Delta t/\Delta V$	Input Edge Rate, V_{IN} = 0.8V–2.0V, V_{CC} = 3.0V		0	10	ns/V

Note 3: The Absolute Maximum Ratings are those values beyond which the safety of the device cannot be guaranteed. The device should not be operated at these limits. The parametric values defined in the Electrical Characteristics tables are not guaranteed at the Absolute Maximum Ratings. The "Recommended Operating Conditions" table will define the conditions for actual device operation.

Note 4: I_O Absolute Maximum Rating must be observed.

Note 5: Unused inputs must be held HIGH or LOW. They may not float.

DC Electrical Characteristics

Symbol	Parameter	Conditions	V_{CC} (V)	T_A = −40°C to +85°C		Units
				Min	Max	
V_{IH}	HIGH Level Input Voltage		2.7 – 3.6	2.0		V
V_{IL}	LOW Level Input Voltage		2.7 – 3.6		0.8	V
V_{OH}	HIGH Level Output Voltage	I_{OH} = −100 µA	2.7 – 3.6	V_{CC} – 0.2		V
		I_{OH} = −12 mA	2.7	2.2		
		I_{OH} = −18 mA	3.0	2.4		
		I_{OH} = −24 mA	3.0	2.2		
V_{OL}	LOW Level Output Voltage	I_{OL} = 100 µA	2.7 – 3.6		0.2	V
		I_{OL} = 12 mA	2.7		0.4	
		I_{OL} = 16 mA	3.0		0.4	
		I_{OL} = 24 mA	3.0		0.55	
I_I	Input Leakage Current	0 ≤ V_I ≤ 5.5V	2.7 – 3.6		±5.0	µA
I_{OZ}	3-STATE Output Leakage	0 ≤ V_O ≤ 5.5V V_I = V_{IH} or V_{IL}	2.7 – 3.6		±5.0	µA
I_{OFF}	Power-Off Leakage Current	V_I or V_O = 5.5V	0		10	µA
$I_{PU/PD}$	Power Up/Down 3-STATE Output Current	V_O = 0.5V to V_{CC} V_I = GND or V_{CC}	0 – 1.5		±5.0	µA
I_{CC}	Quiescent Supply Current	V_I = V_{CC} or GND	2.7 – 3.6		225	µA
		3.6V ≤ V_I, V_O ≤ 5.5V (Note 6)	2.7 – 3.6		±225	
ΔI_{CC}	Increase in I_{CC} per Input	V_{IH} = V_{CC} −0.6V	2.7 – 3.6		500	µA

Note 6: Outputs disabled or 3-STATE only.

AC Electrical Characteristics

Symbol	Parameter	$T_A = -40°C$ to $+85°C$, $R_L = 500\ \Omega$				Units
		$V_{CC} = 3.3V \pm 0.3V$		$V_{CC} = 2.7V$		
		$C_L = 50$ pF		$C_L = 50$ pF		
		Min	Max	Min	Max	
t_{PHL}	Propagation Delay	1.0	4.5	1.0	5.2	ns
t_{PLH}	Data to Output	1.0	4.5	1.0	5.2	
t_{PZL}	Output Enable Time	1.0	5.5	1.0	6.3	ns
t_{PZH}		1.0	5.5	1.0	6.3	
t_{PLZ}	Output Disable Time	1.0	5.4	1.0	5.7	ns
t_{PHZ}		1.0	5.4	1.0	5.7	
t_{OSHL}	Output to Output Skew (Note 7)		1.0			ns
t_{OSLH}			1.0			

Note 7: Skew is defined as the absolute value of the difference between the actual propagation delay for any two separate outputs of the same device. The specification applies to any outputs switching in the same direction, either HIGH-to-LOW (t_{OSHL}) or LOW-to-HIGH (t_{OSLH}). Parameter guaranteed by design.

Dynamic Switching Characteristics

Symbol	Parameter	Conditions	V_{CC} (V)	$T_A = 25°C$ Typical	Units
V_{OLP}	Quiet Output Dynamic Peak V_{OL}	$C_L = 50$ pF, $V_{IH} = 3.3V$, $V_{IL} = 0V$	3.3	0.8	V
V_{OLV}	Quiet Output Dynamic Valley V_{OL}	$C_L = 50$ pF, $V_{IH} = 3.3V$, $V_{IL} = 0V$	3.3	–0.8	V

Capacitance

Symbol	Parameter	Conditions	Typical	Units
C_{IN}	Input Capacitance	V_{CC} = Open, $V_I = 0V$ or V_{CC}	7	pF
C_{OUT}	Output Capacitance	$V_{CC} = 3.3V$, $V_I = 0V$ or V_{CC}	8	pF
C_{PD}	Power Dissipation Capacitance	$V_{CC} = 3.3V$, $V_I = 0V$ or V_{CC}, f = 10 MHz	20	pF

AC LOADING and WAVEFORMS Generic for LCX Family

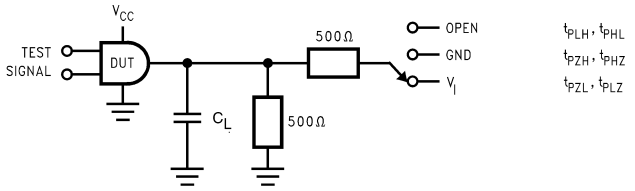

FIGURE 1. AC Test Circuit (C_L includes probe and jig capacitance)

V_I	C_L
6V for V_{CC} = 3.3V, 2.7V	50 pF

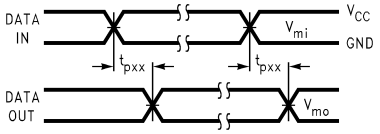

Waveform for Inverting and Non-Inverting Functions

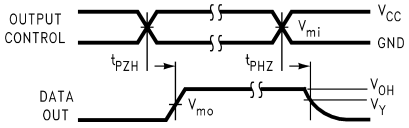

3-STATE Output High Enable and Disable Times for Logic

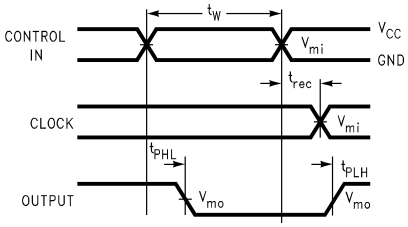

Propagation Delay. Pulse Width and t_{rec} Waveforms

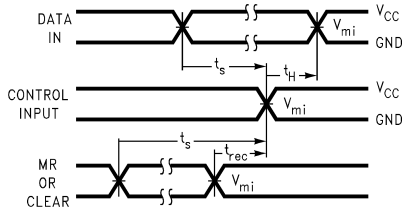

Setup Time, Hold Time and Recovery Time for Logic

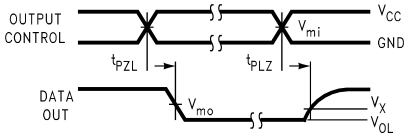

3-STATE Output Low Enable and Disable Times for Logic

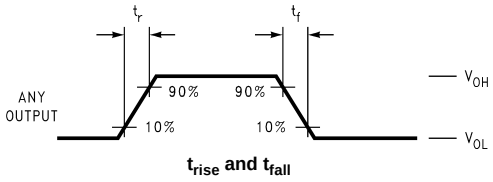

t_{rise} and t_{fall}

FIGURE 2. Waveforms
(Input Characteristics; f = 1 MHz, t_r = t_f = 3 ns)

Symbol	V_{CC}	
	3.3V ± 0.3V	2.7V
V_{mi}	1.5V	1.5V
V_{mo}	1.5V	1.5V
V_x	V_{OL} + 0.3V	V_{OL} + 0.3V
V_y	V_{OH} − 0.3V	V_{OH} − 0.3V

Schematic Diagram Generic for LCX Family

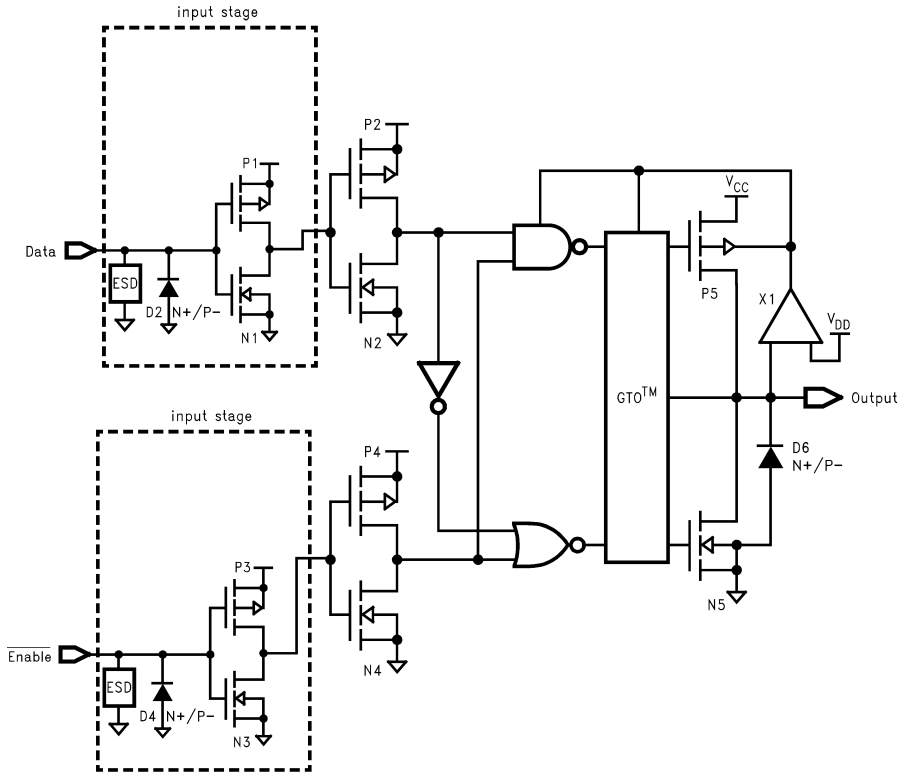

Physical Dimensions inches (millimeters) unless otherwise noted

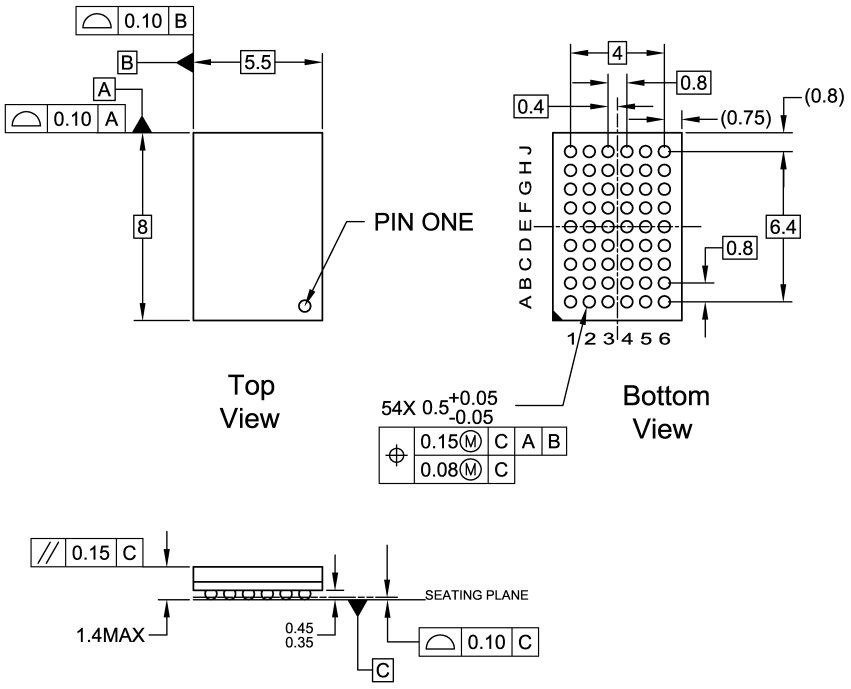

NOTES:

A. THIS PACKAGE CONFORMS TO JEDEC M0-205
B. ALL DIMENSIONS IN MILLIMETERS
C. LAND PATTERN RECOMMENDATION: NSMD (Non Solder Mask Defined)
.35MM DIA PADS WITH A SOLDERMASK OPENING OF .45MM CONCENTRIC TO PADS
D. DRAWING CONFORMS TO ASME Y14.5M-1994

BGA54ArevD

54-Ball Fine-Pitch Ball Grid Array (FBGA), JEDEC MO-205, 5.5mm Wide
Package Number BGA54A
Preliminary

Physical Dimensions inches (millimeters) unless otherwise noted (Continued)

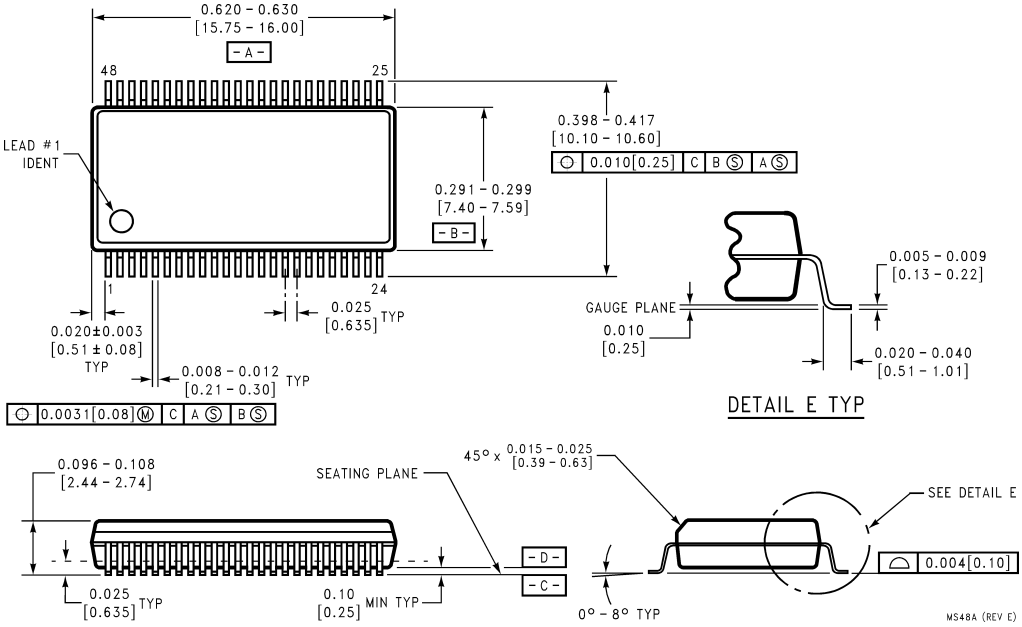

48-Lead Small Shrink Outline Package (SSOP), JEDEC MO-118, 0.300" Wide
Package Number MS48A

Physical Dimensions inches (millimeters) unless otherwise noted (Continued)

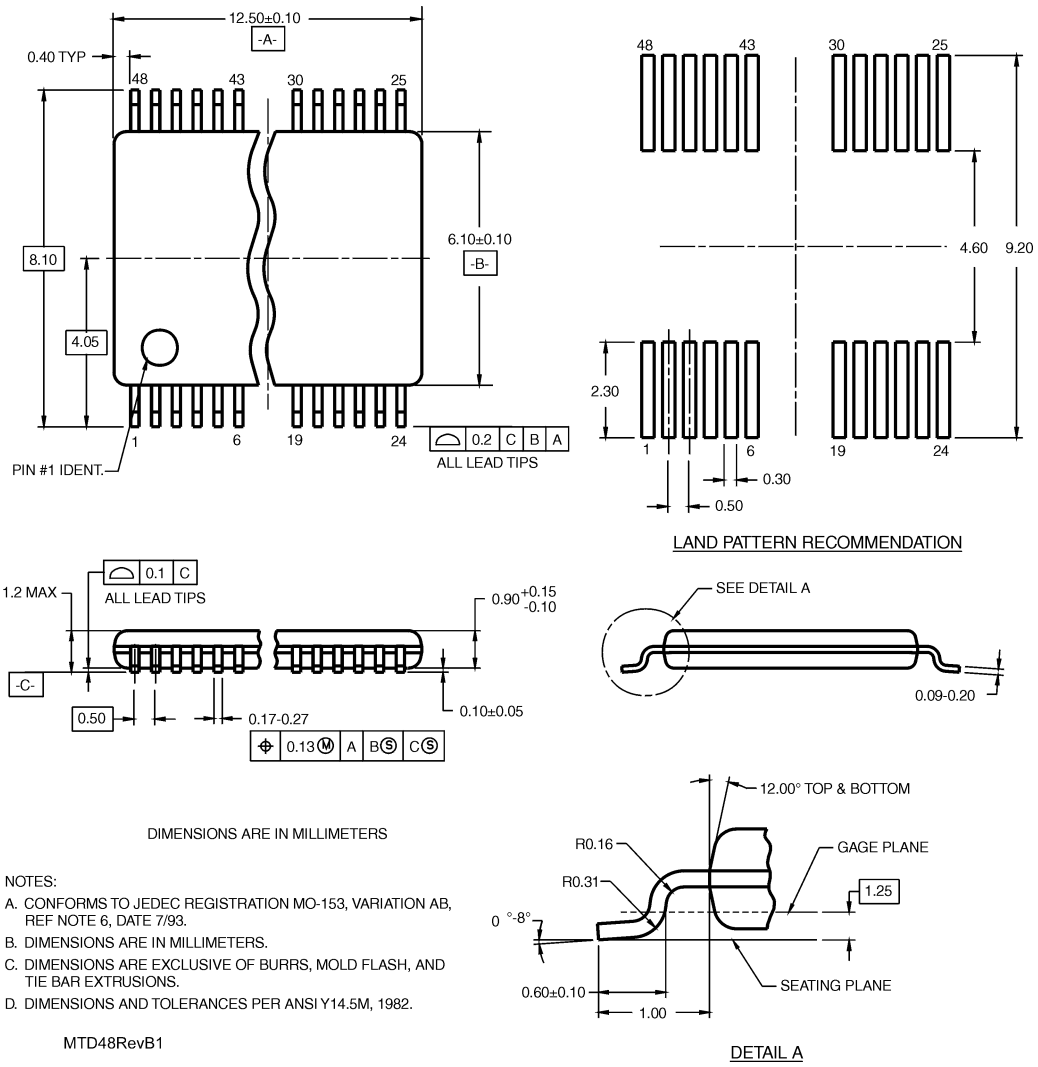

DIMENSIONS ARE IN MILLIMETERS

NOTES:

A. CONFORMS TO JEDEC REGISTRATION MO-153, VARIATION AB, REF NOTE 6, DATE 7/93.

B. DIMENSIONS ARE IN MILLIMETERS.

C. DIMENSIONS ARE EXCLUSIVE OF BURRS, MOLD FLASH, AND TIE BAR EXTRUSIONS.

D. DIMENSIONS AND TOLERANCES PER ANSI Y14.5M, 1982.

MTD48RevB1

48-Lead Thin Shrink Small Outline Package (TSSOP), JEDEC MO-153, 6.1mm Wide
Package Number MTD48

Fairchild does not assume any responsibility for use of any circuitry described, no circuit patent licenses are implied and Fairchild reserves the right at any time without notice to change said circuitry and specifications.

LIFE SUPPORT POLICY

FAIRCHILD'S PRODUCTS ARE NOT AUTHORIZED FOR USE AS CRITICAL COMPONENTS IN LIFE SUPPORT DEVICES OR SYSTEMS WITHOUT THE EXPRESS WRITTEN APPROVAL OF THE PRESIDENT OF FAIRCHILD SEMICONDUCTOR CORPORATION. As used herein:

1. Life support devices or systems are devices or systems which, (a) are intended for surgical implant into the body, or (b) support or sustain life, and (c) whose failure to perform when properly used in accordance with instructions for use provided in the labeling, can be reasonably expected to result in a significant injury to the user.
2. A critical component in any component of a life support device or system whose failure to perform can be reasonably expected to cause the failure of the life support device or system, or to affect its safety or effectiveness.

www.fairchildsemi.com

Unikeyic Electronics

Global Electronic Components Distributor

Click to view pricing, inventory, delivery, and lifecycle information:

ON Semiconductor:

CAV25M01YE-GT3 FDMC86261P LM2901MX MC7815CTG NCV20072DR2G NTS2101PT1G NTS4101PT1G FDMS86202 MC74LVX244DWR2G MMSZ5255BT1G MVMBF0201NLT1G RB751V40T1G BAS19LT3G CAT823TTDI-GT3 SVC704-TL-E 74ABT541CMTC 74LCX244WM ESD9X7.0ST5G MMVL2101T1G NCV7344AD10R2G 1N5344BRLG FOD3120SDV NL17SZ126DFT2G QT7810X MC14538BDTR2G NCV431BSNT1G SBAT54CWT1G-M02 1N4749ATR FAN3229TMX-F085 MC34161DG