MC100LVE164

3.3V ECL 16:1 Multiplexer

The MC100LVE164 is a 16:1 multiplexer with a differential output. The select inputs (SEL0, 1, 2, 3) control which one of the sixteen data inputs (A0 – A15) is propragated to the output. The device is functionally equivalent to the MC100E164 except it operates from a 3.3 V supply. The device is packaged in the 32–lead LQFP. The LQFP has a 7x7 mm body with a 0.8 mm lead pitch.

Special attention to the design layout results in a typical skew between the 16 inputs of only 50 ps.

Features

- 850 ps Data Input to Output
- Differential Output
- ESD Protection: Human Body Model; >2 kV,
  Machine Model >200 V
- The 100 Series Contains Temperature Compensation
- PECL Mode Operating Range: V_{CC} = 3.0 V to 3.8 V
  with V_{EE} = 0 V
- NECL Mode Operating Range: V_{CC} = 0 V
  with V_{EE} = −3.0 V to −3.8 V
- Internal Input Pulldown Resistors
- Meets or Exceeds JEDEC Spec EIA/JESD78 IC Latchup Test
- Moisture Sensitivity Level 2
  For Additional Information, see Application Note AND8003/D
- Flammability Rating: UL 94 code V−0 @ 0.125 in,
  Oxygen Index: 28 to 34
- Transistor Count = 307 devices
- Pb−Free Packages are Available*

*For additional information on our Pb−Free strategy and soldering details, please download the ON Semiconductor Soldering and Mounting Techniques Reference Manual, SOLDERRM/D.

ON Semiconductor®

http://onsemi.com

MARKING DIAGRAM*



32 LQFP
FA SUFFIX
CASE 873A

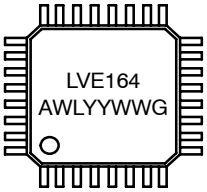

A	= Assembly Location
WL	= Wafer Lot
YY	= Year
WW	= Work Week
G	= Pb−Free Package

*For additional marking information, refer to Application Note AND8002/D.

ORDERING INFORMATION

See detailed ordering and shipping information in the package dimensions section on page 6 of this data sheet.

© Semiconductor Components Industries, LLC, 2006

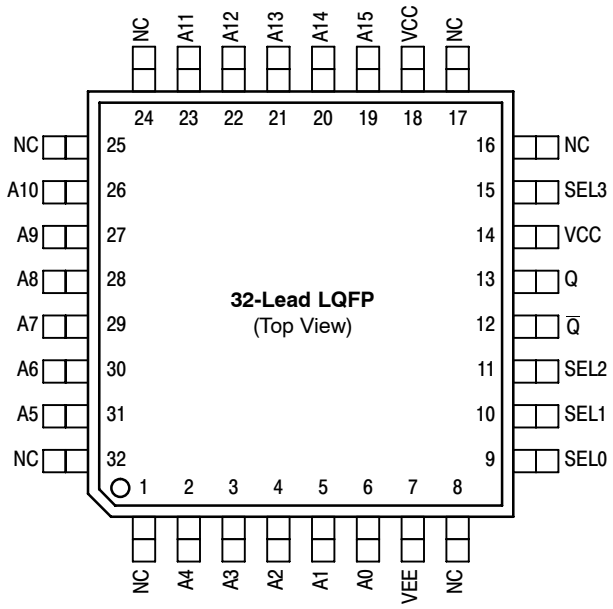

Warning: All V_{CC} and V_{EE} pins must be externally connected to Power Supply to guarantee proper operation.

Figure 1. Logic Diagram and Pinout Assignment

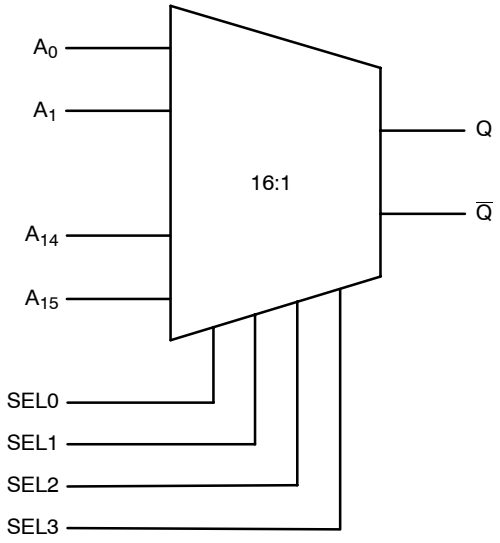

Figure 2. Logic Diagram

Table 1. PIN DESCRIPTION

PIN	FUNCTION
$A_0 - A_{15}$	ECL Data Inputs
SEL[0:3]	ECL Select Inputs
Q, $\overline{Q}$	ECL Differential Outputs
V_{CC}	Positive Supply
V_{EE}	Negative Supply
NC	No Connect

Table 2. FUNCTION TABLE

SEL3	SEL2	SEL1	SEL0	Data
L	L	L	L	A0
L	L	L	H	A1
L	L	H	L	A2
L	L	H	H	A3
L	H	L	L	A4
L	H	L	H	A5
L	H	H	L	A6
L	H	H	H	A7
H	L	L	L	A8
H	L	L	H	A9
H	L	H	L	A10
H	L	H	H	A11
H	H	L	L	A12
H	H	L	H	A13
H	H	H	L	A14
H	H	H	H	A15

Table 3. MAXIMUM RATINGS

Symbol	Parameter	Condition 1	Condition 2	Rating	Unit
V_{CC}	PECL Mode Power Supply	V_{EE} = 0 V		8 to 0	V
V_{EE}	NECL Mode Power Supply	V_{CC} = 0 V		−8 to 0	V
V_I	PECL Mode Input Voltage NECL Mode Input Voltage	V_{EE} = 0 V V_{CC} = 0 V	$V_I \leq V_{CC}$ $V_I \geq V_{EE}$	6 to 0 −6 to 0	V V
I_{out}	Output Current	Continuous Surge		50 100	mA mA
T_A	Operating Temperature Range			−40 to +85	°C
T_{stg}	Storage Temperature Range			−65 to +150	°C
θ_{JA}	Thermal Resistance (Junction−to−Ambient)	0 lfpm 500 lfpm	32 LQFP 32 LQFP	80 55	°C/W °C/W
θ_{JC}	Thermal Resistance (Junction−to−Case)	Standard Board	32 LQFP	12 to 17	°C/W
T_{sol}	Wave Solder Pb Pb−Free	<2 to 3 sec @ 248°C <2 to 3 sec @ 260°C		265 265	°C

Stresses exceeding Maximum Ratings may damage the device. Maximum Ratings are stress ratings only. Functional operation above the Recommended Operating Conditions is not implied. Extended exposure to stresses above the Recommended Operating Conditions may affect device reliability.

Table 4. LVPECL DC CHARACTERISTICS V_{CC} = 3.3 V; V_{EE} = 0.0 V (Note 1)

		−40°C			25°C			85°C			
Symbol	Characteristic	Min	Typ	Max	Min	Typ	Max	Min	Typ	Max	Unit
I_{EE}	Power Supply Current		34	45		34	45		37	45	mA
V_{OH}	Output HIGH Voltage (Note 2)	2215	2295	2420	2275	2345	2420	2275	2345	2420	mV
V_{OL}	Output LOW Voltage (Note 2)	1470	1605	1745	1490	1595	1680	1490	1595	1680	mV
V_{IH}	Input HIGH Voltage (Single−Ended)	2135		2420	2135		2420	2135		2420	mV
V_{IL}	Input LOW Voltage (Single−Ended)	1490		1825	1490		1825	1490		1825	mV
I_{IH}	Input HIGH Current			150			150			150	μA
I_{IL}	Input LOW Current	0.5			0.5			0.5			μA

NOTE: Device will meet the specifications after thermal equilibrium has been established when mounted in a test socket or printed circuit board with maintained transverse airflow greater than 500 lfpm. Electrical parameters are guaranteed only over the declared operating temperature range. Functional operation of the device exceeding these conditions is not implied. Device specification limit values are applied individually under normal operating conditions and not valid simultaneously.

1. Input and output parameters vary 1:1 with V_{CC}. V_{EE} can vary ±0.3 V.
2. Outputs are terminated through a 50 Ω resistor to V_{CC} − 2.0 V.

Table 5. LVNECL DC CHARACTERISTICS V_{CC} = 0.0 V; V_{EE} = −3.3 V (Note 3)

		−40°C			25°C			85°C			
Symbol	**Characteristic**	**Min**	**Typ**	**Max**	**Min**	**Typ**	**Max**	**Min**	**Typ**	**Max**	**Unit**
I_{EE}	Power Supply Current		34	45		34	45		37	45	mA
V_{OH}	Output HIGH Voltage (Note 4)	−1085	−1005	−880	−1025	−955	−880	−1025	−955	−880	mV
V_{OL}	Output LOW Voltage (Note 4)	−1830	−1695	−1555	−1810	−1705	−1620	−1810	−1705	−1620	mV
V_{IH}	Input HIGH Voltage (Single−Ended)	−1165		−880	−1165		−880	−1165		−880	mV
V_{IL}	Input LOW Voltage (Single−Ended)	−1810		−1475	−1810		−1475	−1810		−1475	mV
I_{IH}	Input HIGH Current			150			150			150	μA
I_{IL}	Input LOW Current	0.5			0.5			0.5			μA

NOTE: Device will meet the specifications after thermal equilibrium has been established when mounted in a test socket or printed circuit board with maintained transverse airflow greater than 500 lfpm. Electrical parameters are guaranteed only over the declared operating temperature range. Functional operation of the device exceeding these conditions is not implied. Device specification limit values are applied individually under normal operating conditions and not valid simultaneously.

3. Input and output parameters vary 1:1 with V_{CC}. V_{EE} can vary ±0.3 V.
4. Outputs are terminated through a 50 Ω resistor to V_{CC} − 2.0 V.

Table 6. AC CHARACTERISTICS V_{CC} = 3.3 V; V_{EE} = 0.0 V or V_{CC} = 0.0 V; V_{EE} = −3.3 V (Note 5)

			−40°C			25°C			85°C			
Symbol	**Characteristic**		**Min**	**Typ**	**Max**	**Min**	**Typ**	**Max**	**Min**	**Typ**	**Max**	**Unit**
f_{max}	Maximum Toggle Frequency			700			700			700		MHz
t_{PLH} t_{PHL}	Propagation Delay to Output	A Input	350	600	850	350	600	850	350	600	850	ps
		SEL0	500	700	900	500	700	900	500	700	900	
		SEL1	400	675	900	400	675	900	400	675	900	
		SEL2	400	675	900	400	675	900	400	675	900	
		SEL3	400	550	700	400	550	700	400	550	700	
t_{SKEW}	Within Device Skew (Note 6)			75			50			50		ps
t_{JITTER}	RMS Random Clock Jitter			<1			<1			<1		ps
t_r t_f	Rise/Fall Times (20% − 80%)		275	400	550	275	400	550	275	400	550	ps

NOTE: Device will meet the specifications after thermal equilibrium has been established when mounted in a test socket or printed circuit board with maintained transverse airflow greater than 500 lfpm. Electrical parameters are guaranteed only over the declared operating temperature range. Functional operation of the device exceeding these conditions is not implied. Device specification limit values are applied individually under normal operating conditions and not valid simultaneously.

5. V_{EE} can vary ±0.3 V.
6. Within Device skew is defined as the difference in the A to Q delay between the 16 different A inputs.

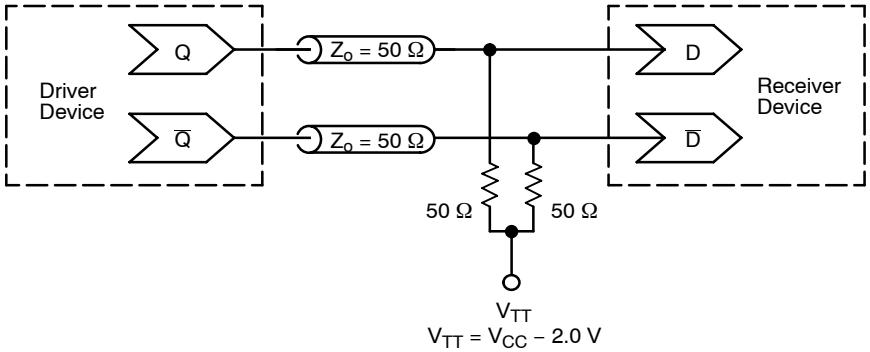

Figure 3. Typical Termination for Output Driver and Device Evaluation (See Application Note AND8020/D – Termination of ECL Logic Devices.)

Resource Reference of Application Notes

AN1405/D – ECL Clock Distribution Techniques

AN1406/D – Designing with PECL (ECL at +5.0 V)

AN1503/D – ECLinPS™ I/O SPiCE Modeling Kit

AN1504/D – Metastability and the ECLinPS Family

AN1568/D – Interfacing Between LVDS and ECL

AN1672/D – The ECL Translator Guide

AND8001/D – Odd Number Counters Design

AND8002/D – Marking and Date Codes

AND8020/D – Termination of ECL Logic Devices

AND8066/D – Interfacing with ECLinPS

AND8090/D – AC Characteristics of ECL Devices

ORDERING INFORMATION

Device	Package	Shipping†
MC100LVE164FA	LQFP	250 Units / Rail
MC100LVE164FAG	LQFP (Pb−Free)	250 Units / Rail
MC100LVE164FAR2	LQFP	2000 / Tape & Reel
MC100LVE164FAR2G	LQFP (Pb−Free)	2000 / Tape & Reel

†For information on tape and reel specifications, including part orientation and tape sizes, please refer to our Tape and Reel Packaging Specifications Brochure, BRD8011/D.

PACKAGE DIMENSIONS

32 LEAD LQFP
CASE 873A–02
ISSUE C

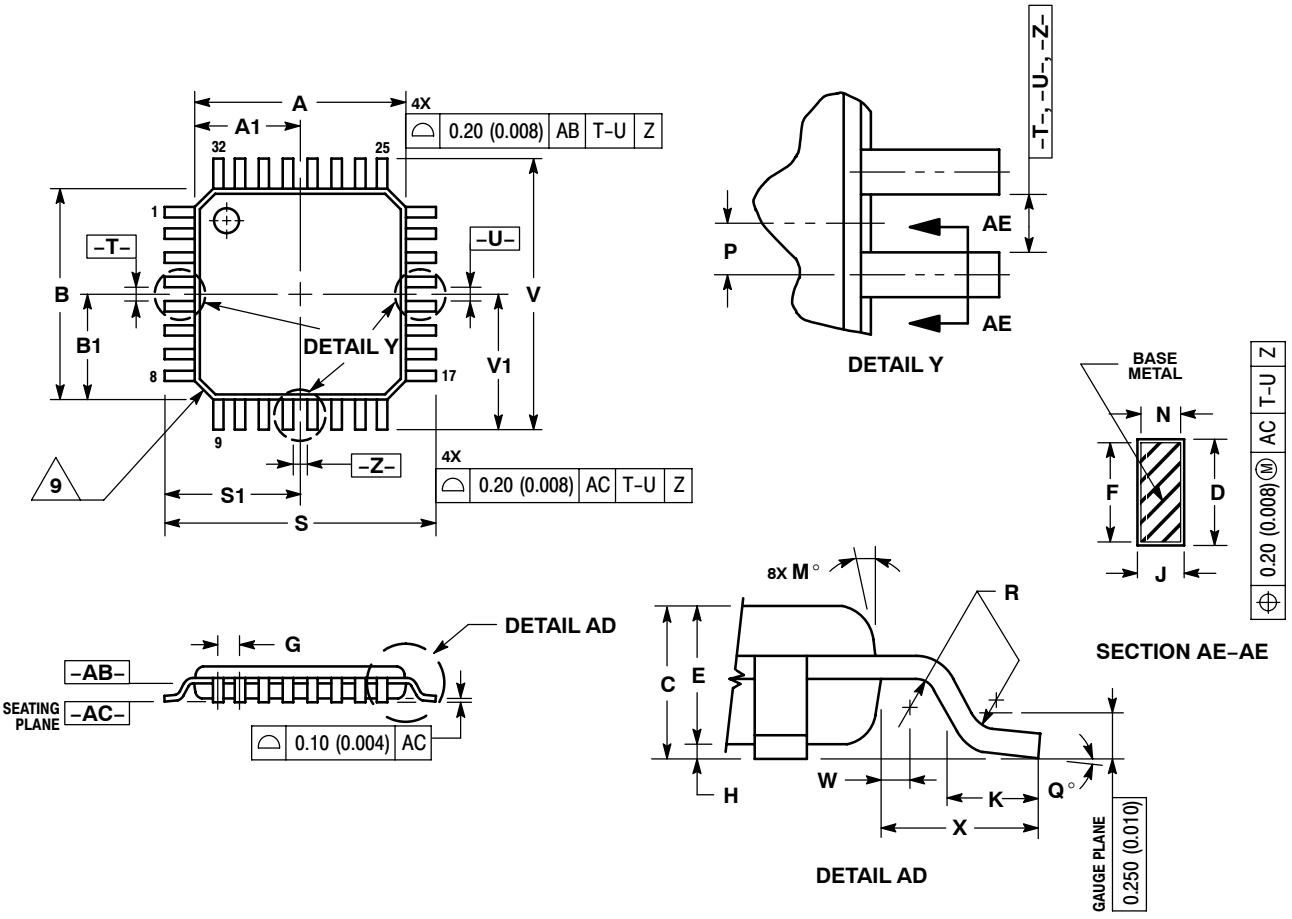

ECLinPS is a trademark of Semiconductor Components INdustries, LLC (SCILLC).

ON Semiconductor and ON are registered trademarks of Semiconductor Components Industries, LLC (SCILLC). SCILLC reserves the right to make changes without further notice to any products herein. SCILLC makes no warranty, representation or guarantee regarding the suitability of its products for any particular purpose, nor does SCILLC assume any liability arising out of the application or use of any product or circuit, and specifically disclaims any and all liability, including without limitation special, consequential or incidental damages. "Typical" parameters which may be provided in SCILLC data sheets and/or specifications can and do vary in different applications and actual performance may vary over time. All operating parameters, including "Typicals" must be validated for each customer application by customer's technical experts. SCILLC does not convey any license under its patent rights nor the rights of others. SCILLC products are not designed, intended, or authorized for use as components in systems intended for surgical implant into the body, or other applications intended to support or sustain life, or for any other application in which the failure of the SCILLC product could create a situation where personal injury or death may occur. Should Buyer purchase or use SCILLC products for any such unintended or unauthorized application, Buyer shall indemnify and hold SCILLC and its officers, employees, subsidiaries, affiliates, and distributors harmless against all claims, costs, damages, and expenses, and reasonable attorney fees arising out of, directly or indirectly, any claim of personal injury or death associated with such unintended or unauthorized use, even if such claim alleges that SCILLC was negligent regarding the design or manufacture of the part. SCILLC is an Equal Opportunity/Affirmative Action Employer. This literature is subject to all applicable copyright laws and is not for resale in any manner.

PUBLICATION ORDERING INFORMATION

LITERATURE FULFILLMENT:
Literature Distribution Center for ON Semiconductor
P.O. Box 5163, Denver, Colorado 80217 USA
Phone: 303–675–2175 or 800–344–3860 Toll Free USA/Canada
Fax: 303–675–2176 or 800–344–3867 Toll Free USA/Canada
Email: orderlit@onsemi.com

N. American Technical Support: 800–282–9855 Toll Free USA/Canada
Europe, Middle East and Africa Technical Support:
Phone: 421 33 790 2910
Japan Customer Focus Center
Phone: 81–3–5773–3850

ON Semiconductor Website: **www.onsemi.com**

Order Literature: http://www.onsemi.com/orderlit

For additional information, please contact your local Sales Representative

Unikeyic Electronics

Global Electronic Components Distributor

Click to view pricing, inventory, delivery, and lifecycle information:

ON Semiconductor:

NCP1566MNTXG UC2845BD1R2G CS8182YDPSR5G FOD2741AV FDMA7672 MC74ACT541DWG NCP114AMX250TCG MC34152DR2G MC74LCX02DTR2G MMBTH81 NB3N853531EDTG NCP1342ENDCEAD1R2G NCV5501DT33RKG CNY17-3V-M MC33077DR2G SZ1SMA5913BT3G TLV431CSN1T1G NCS20081MUTAG NTBG060N090SC1 1SMA5938BT3G FDMS7608S KSA1156OSTSTU LV8014T-TLM-E NC7WV07P6X LM385BD-2.5R2G LM393NG NCP1397BDR2G LA4440J-E LB1861M-TLM-H MOC212R2M