SN54194, SN54LS194A, SN54S194, SN74194, SN74LS194A, SN74S194
4-BIT BIDIRECTIONAL UNIVERSAL SHIFT REGISTERS

MARCH 1974—REVISED MARCH 1988

- Parallel Inputs and Outputs
- Four Operating Modes:
  - Synchronous Parallel Load
  - Right Shift
  - Left Shift
  - Do Nothing
- Positive Edge-Triggered Clocking
- Direct Overriding Clear

TYPE	TYPICAL MAXIMUM CLOCK FREQUENCY	TYPICAL POWER DISSIPATION
'194	36 MHz	195 mW
'LS194A	36 MHz	75 mW
'S194	105 MHz	425 mW

description

These bidirectional shift registers are designed to incorporate virtually all of the features a system designer may want in a shift register. The circuit contains 46 equivalent gates and features parallel inputs, parallel outputs, right-shift and left-shift serial inputs, operating-mode-control inputs, and a direct overriding clear line. The register has four distinct modes of operation, namely:

Inhibit clock (do nothing)
Shift right (in the direction Q_A toward Q_D)
Shift left (in the direction Q_D toward Q_A)
Parallel (broadside) load

Synchronous parallel loading is accomplished by applying the four bits of data and taking both mode control inputs, S0 and S1, high. The data are loaded into the associated flip-flops and appear at the outputs after the positive transition of the clock input. During loading, serial data flow is inhibited.

Shift right is accomplished synchronously with the rising edge of the clock pulse when S0 is high and S1 is low. Serial data for this mode is entered at the shift-right data input. When S0 is low and S1 is high, data shifts left synchronously and new data is entered at the shift-left serial input.

Clocking of the shift register is inhibited when both mode control inputs are low. The mode controls of the SN54194/SN74194 should be changed only while the clock input is high.

SN54194, SN54LS194A, SN54S194 . . . J OR W PACKAGE
SN74194 . . . N PACKAGE
SN74LS194A, SN74S194 . . . D OR N PACKAGE
(TOP VIEW)

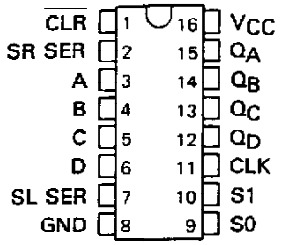

SN54LS194A, SN54S194 . . . FK PACKAGE
(TOP VIEW)

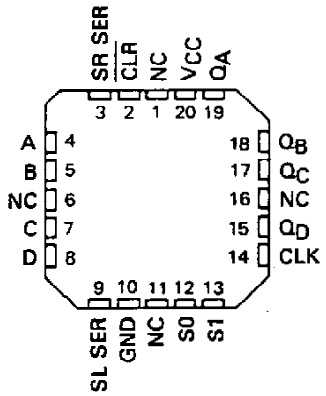

NC – No internal connection

logic symbol†

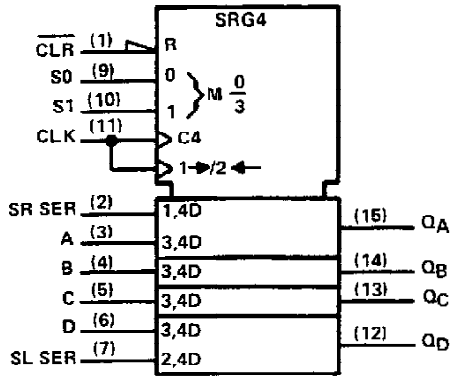

†This symbol is in accordance with ANSI/IEEE Std. 91-1984 and IEC Publication 617-12.
Pin numbers shown are for D, J, N, and W packages.

PRODUCTION DATA documents contain information current as of publication date. Products conform to specifications per the terms of Texas Instruments standard warranty. Production processing does not necessarily include testing of all parameters.

FUNCTION TABLE

INPUTS										OUTPUTS			
CLEAR	MODE		CLOCK	SERIAL		PARALLEL				Q_A	Q_B	Q_C	Q_D
	S1	S0		LEFT	RIGHT	A	B	C	D				
L	X	X	X	X	X	X	X	X	X	L	L	L	L
H	X	X	L	X	X	X	X	X	X	Q_{A0}	Q_{B0}	Q_{C0}	Q_{D0}
H	H	H	↑	X	X	a	b	c	d	a	b	c	d
H	L	H	↑	X	H	X	X	X	X	H	Q_{An}	Q_{Bn}	Q_{Cn}
H	L	H	↑	X	L	X	X	X	X	L	Q_{An}	Q_{Bn}	Q_{Cn}
H	H	L	↑	H	X	X	X	X	X	Q_{Bn}	Q_{Cn}	Q_{Dn}	H
H	H	L	↑	L	X	X	X	X	X	Q_{Bn}	Q_{Cn}	Q_{Dn}	L
H	L	L	X	X	X	X	X	X	X	Q_{A0}	Q_{B0}	Q_{C0}	Q_{D0}

H = high level (steady state)
L = low level (steady state)
X = irrelevant (any input, including transitions)
↑ = transition from low to high level
a, b, c, d = the level of steady-state input at inputs A, B, C, or D, respectively.
Q_{A0}, Q_{B0}, Q_{C0}, Q_{D0} = the level of Q_A, Q_B, Q_C, or Q_D, respectively, before the indicated steady-state input conditions were established.
Q_{An}, Q_{Bn}, Q_{Cn}, Q_{Dn} = the level of Q_A, Q_B, Q_C, respectively, before the most-recent ↑ transition of the clock.

schematics of inputs and outputs

'194

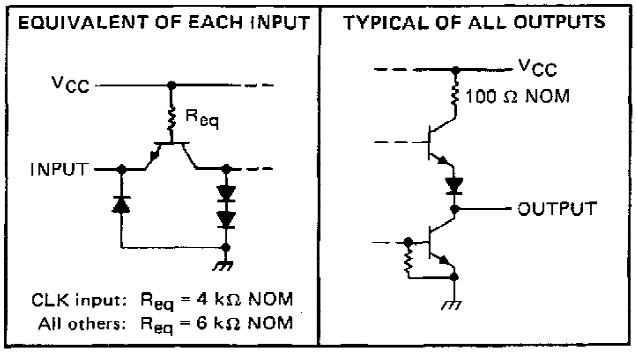

'LS194A

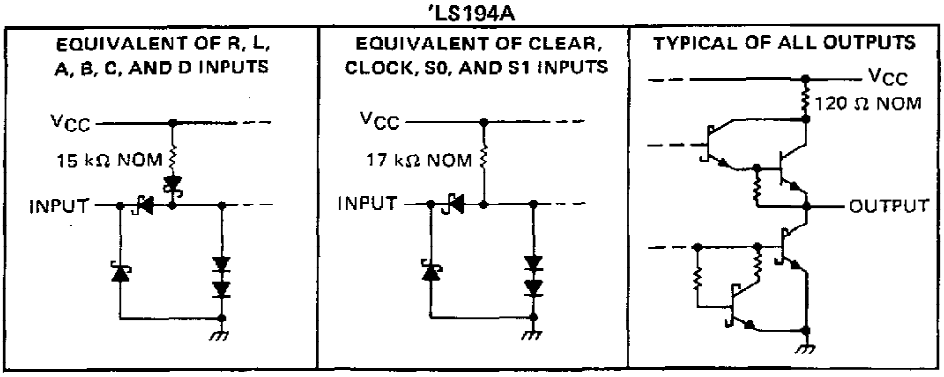

'S194

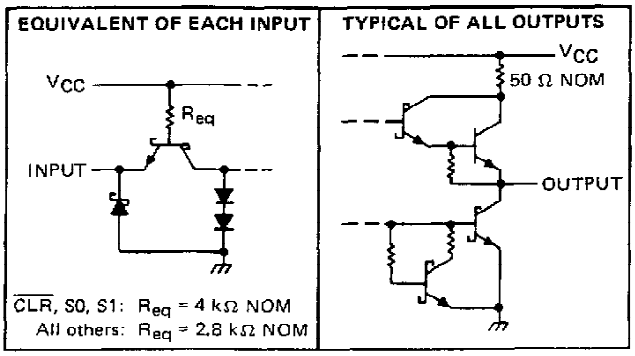

logic diagrams (positive logic)

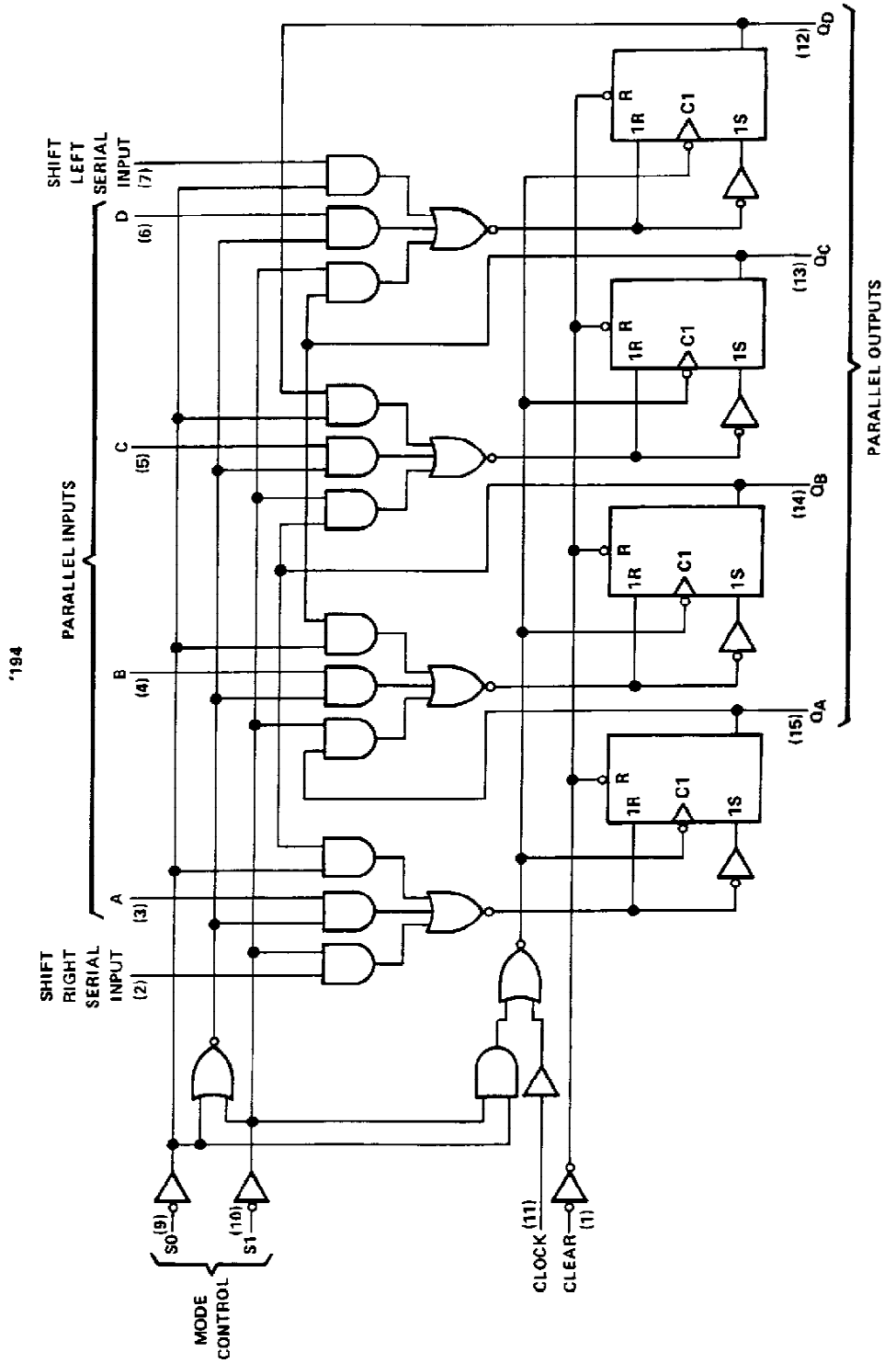

Pin numbers shown are for D, J, N, and W packages.

logic diagrams (continued)

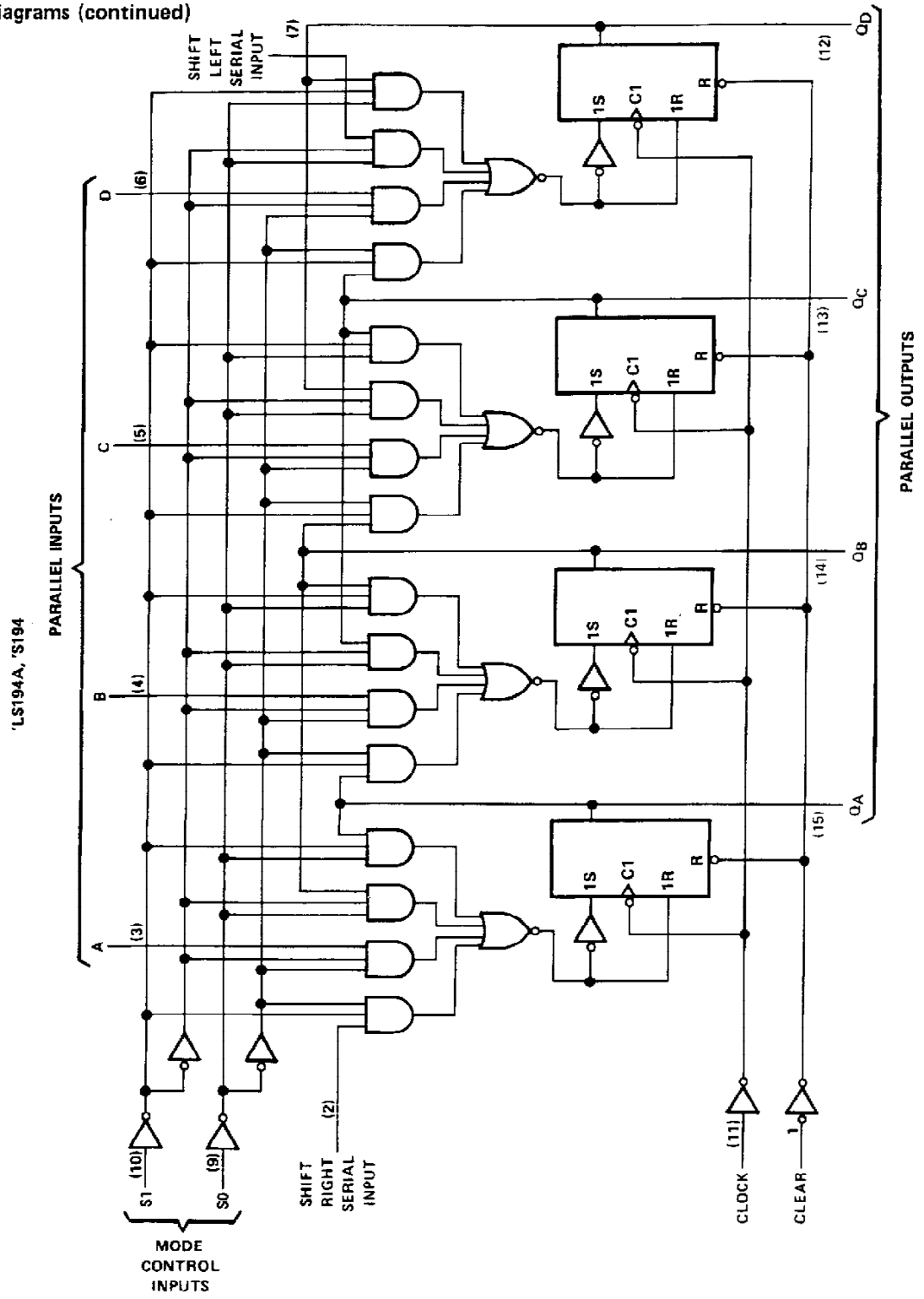

Pin numbers shown on logic notation are for D, J or N, and W packages.

typical clear, load, right-shift, left-shift, inhibit, and clear sequences

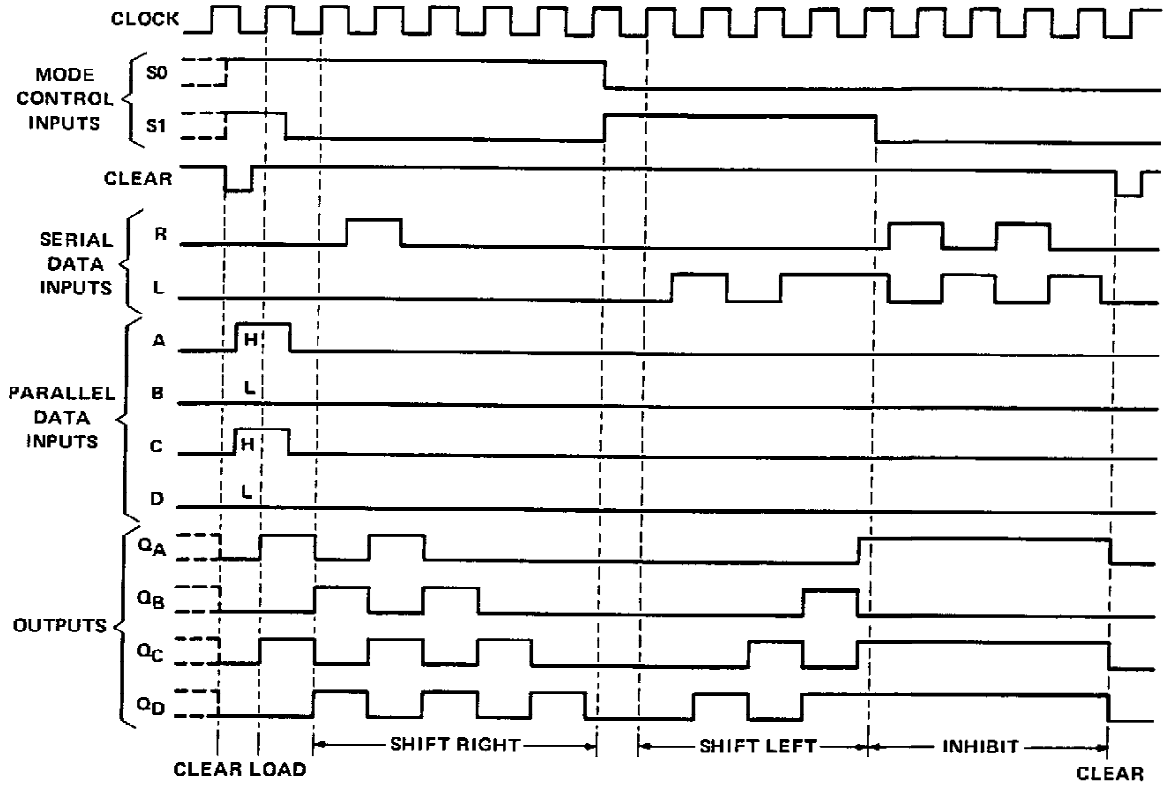

absolute maximum ratings over operating free-air temperature range (unless otherwise noted)

Supply voltage, V_{CC} (see Note 1) . . . . . 7 V
Input voltage . . . . . 5.5 V
Operating free-air temperature range: SN54194 . . . . . −55°C to 125°C
SN74194 . . . . . 0°C to 70°C
Storage temperature range . . . . . −65°C to 150°C

NOTE 1: Voltage values are with respect to network ground terminal.

recommended operating conditions

		SN54194			SN74194			UNIT
		MIN	NOM	MAX	MIN	NOM	MAX	
Supply voltage, V_{CC}		4.5	5	5.5	4.75	5	5.25	V
High-level output current, I_{OH}				−800			−800	μA
Low-level output current, I_{OL}				16			16	mA
Clock frequency, f_{clock}		0		25	0		25	MHz
Width of clock or clear pulse, t_w		20			20			ns
Setup time, t_{su}	Mode control	30			30			ns
	Serial and parallel data	20			20			ns
	Clear inactive-state	25			25			ns
Hold time at any input, t_h		0			0			ns
Operating free-air temperature, T_A		−55		125	0		70	°C

electrical characteristics over recommended operating free-air temperature range (unless otherwise noted)

PARAMETER		TEST CONDITIONS†	SN54194			SN74194			UNIT
			MIN	TYP‡	MAX	MIN	TYP‡	MAX	
V_{IH}	High-level input voltage		2			2			V
V_{IL}	Low-level input voltage				0.8			0.8	V
V_{IK}	Input clamp voltage	V_{CC} = MIN, I_I = −12 mA			−1.5			−1.5	V
V_{OH}	High-level output voltage	V_{CC} = MIN, V_{IH} = 2 V, V_{IL} = 0.8 V, I_{OH} = −800 μA	2.4	3.4		2.4	3.4		V
V_{OL}	Low-level output voltage	V_{CC} = MIN, V_{IH} = 2 V, V_{IL} = 0.8 V, I_{OL} = 16 mA		0.2	0.4		0.2	0.4	V
I_I	Input current at maximum input voltage	V_{CC} = MAX, V_I = 5.5 V			1			1	mA
I_{IH}	High-level input current	V_{CC} = MAX, V_I = 2.4 V			40			40	μA
I_{IL}	Low-level input current	V_{CC} = MAX, V_I = 0.4 V			−1.6			−1.6	mA
I_{OS}	Short-circuit output current§	V_{CC} = MAX	−20		−57	−18		−57	mA
I_{CC}	Supply current	V_{CC} = MAX, See Note 2		39	63		39	63	mA

†For conditions shown as MIN or MAX, use the appropriate value specified under recommended operating conditions.
‡All typical values are at V_{CC} = 5 V, T_A = 25°C.
§Not more than one output should be shorted at a time.
NOTE 2: With all outputs open, inputs A through D grounded, and 4.5 V applied to S0, S1, clear, and the serial inputs, I_{CC} is tested with a momentary GND, then 4.5 V applied to clock.

switching characteristics, V_{CC} = 5 V, T_A = 25°C

PARAMETER		TEST CONDITIONS	MIN	TYP	MAX	UNIT
f_{max}	Maximum clock frequency	C_L = 15 pF, R_L = 400 Ω, See Figure 1	25	36		MHz
t_{PHL}	Propagation delay time, high-to-low-level output from clear			19	30	ns
t_{PLH}	Propagation delay time, low-to-high-level output from clock			14	22	ns
t_{PHL}	Propagation delay time, high-to-low-level output from clock			17	26	ns

absolute maximum ratings over operating free-air temperature range (unless otherwise noted)

Supply voltage, V_{CC} (see Note 1) . . . . . 7 V
Input voltage . . . . . 7 V
Operating free-air temperature range: SN54LS194A . . . . . −55°C to 125°C
SN74LS194A . . . . . 0°C to 70°C
Storage temperature range . . . . . −65°C to 150°C

NOTE 1: Voltage values are with respect to network ground terminal.

recommended operating conditions

		SN54LS194A			SN74LS194A			UNIT
		MIN	NOM	MAX	MIN	NOM	MAX	
Supply voltage, V_{CC}		4.5	5	5.5	4.75	5	5.25	V
High-level output current, I_{OH}				−400			−400	μA
Low-level output current, I_{OL}				4			8	mA
Clock frequency, f_{clock}		0		25	0		25	MHz
Width of clock or clear pulse, t_w		20			20			ns
Setup time, t_{su}	Mode control	30			30			ns
	Serial and parallel data	20			20			ns
	Clear inactive-state	25			25			ns
Hold time at any input, t_h		0			0			ns
Operating free-air temperature, T_A		−55		125	0		70	°C

electrical characteristics over recommended operating free-air temperature range (unless otherwise noted)

PARAMETER		TEST CONDITIONS†		SN54LS194A			SN74LS194A			UNIT
				MIN	TYP‡	MAX	MIN	TYP‡	MAX	
V_{IH}	High-level input voltage			2			2			V
V_{IL}	Low-level input voltage					0.7			0.8	V
V_I	Input clamp voltage	V_{CC} = MIN, I_I = −18 mA				−1.5			−1.5	V
V_{OH}	High-level output voltage	V_{CC} = MIN, V_{IH} = 2 V, V_{IL} = V_{IL} max, I_{OH} = −400 μA		2.5	3.5		2.7	3.5		V
V_{OL}	Low-level output voltage	V_{CC} = MIN, V_{IH} = 2 V, V_{IL} = V_{IL} max	I_{OL} = 4 mA		0.25	0.4		0.25	0.4	V
			I_{OL} = 8 mA					0.35	0.5	
I_I	Input current at maximum input voltage	V_{CC} = MAX, V_I = 7 V				0.1			0.1	mA
I_{IH}	High-level input current	V_{CC} = MAX, V_I = 2.7 V				20			20	μA
I_{IL}	Low-level input current	V_{CC} = MAX, V_I = 0.4 V				−0.4			−0.4	mA
I_{OS}	Short-circuit output current§	V_{CC} = MAX		−20		−100	−20		−100	mA
I_{CC}	Supply current	V_{CC} = MAX, See Note 2			15	23		15	23	mA

†For conditions shown as MIN or MAX, use the appropriate value specified under recommended operating conditions.
‡All typical values are at V_{CC} = 5 V, T_A = 25°C.
§Not more than one output should be shorted at a time, and duration of the short-circuit should not exceed one second.
NOTE 2: With all outputs open, inputs A through D grounded, and 4.5 V applied to S0, S1, clear, and the serial inputs, I_{CC} is tested with a momentary GND, then 4.5 V, applied to clock.

switching characteristics, V_{CC} = 5 V, T_A = 25°C

PARAMETER		TEST CONDITIONS	MIN	TYP	MAX	UNIT
f_{max}	Maximum clock frequency	C_L = 15 pF, R_L = 2 kΩ, See Figure 1	25	36		MHz
t_{PHL}	Propagation delay time, high-to-low-level output from clear			19	30	ns
t_{PLH}	Propagation delay time, low-to-high level output from clock			14	22	ns
t_{PHL}	Propagation delay time, high-to-low level output from clock			17	26	ns

absolute maximum ratings over operating free-air temperature range (unless otherwise noted)

Supply voltage, V_{CC} (see Note 1) . . . . . 7 V
Input voltage . . . . . 5.5 V
Operating free-air temperature range: SN54S194 . . . . . −55°C to 125°C
SN74S194 . . . . . 0°C to 70°C
Storage temperature range . . . . . −65°C to 150°C

NOTE 1: Voltage values are with respect to network ground terminal.

recommended operating conditions

		SN54S194			SN74S194			UNIT
		MIN	NOM	MAX	MIN	NOM	MAX	
Supply voltage, V_{CC}		4.5	5	5.5	4.75	5	5.25	V
High-level output current, I_{OH}				−1			−1	mA
Low-level output current, I_{OL}				20			20	mA
Clock frequency, f_{clock}		0		70	0		70	MHz
Width of clock pulse, $t_{w(clock)}$		7			7			ns
Width of clear pulse, $t_{w(clear)}$		12			12			ns
Setup time, t_{su}	Mode control	11			11			ns
	Serial and parallel data	5			5			ns
	Clear inactive-state	9			9			ns
Hold time at any input, t_h		3			3			ns
Operating free-air temperature, T_A		−55		125	0		70	°C

electrical characteristics over recommended operating free-air temperature range (unless otherwise noted)

PARAMETER		TEST CONDITIONS†		SN54S194			SN74S194			UNIT
				MIN	TYP‡	MAX	MIN	TYP‡	MAX	
V_{IH}	High-level input voltage			2			2			V
V_{IL}	Low-level input voltage					0.8			0.8	V
V_{IK}	Input clamp voltage	V_{CC} = MIN, I_I = −18 mA				−1.2			−1.2	V
V_{OH}	High-level output voltage	V_{CC} = MIN, V_{IH} = 2 V, V_{IL} = 0.8 V, I_{OH} = −1 mA		2.5	3.4		2.7	3.4		V
V_{OL}	Low-level output voltage	V_{CC} = MIN, V_{IH} = 2 V, V_{IL} = 0.8 V, I_{OL} = 20 mA				0.5			0.5	V
I_I	Input current at maximum input voltage	V_{CC} = MAX, V_I = 5.5 V				1			1	mA
I_{IH}	High-level input current	V_{CC} = MAX, V_I = 2.7 V				50			50	μA
I_{IL}	Low-level input current	V_{CC} = MAX, V_I = 0.5 V				−2			−2	mA
I_{OS}	Short-circuit output current§	V_{CC} = MAX		−40		−100	−40		−100	mA
I_{CC}	Supply current	V_{CC} = MAX,	See Note 2		85	135		85	135	mA
		V_{CC} = MAX, T_A = 125°C, See Note 2	W package			110				

†For conditions shown as MIN or MAX, use the appropriate value specified under recommended operating conditions.
‡All typical values are at V_{CC} = 5 V, T_A = 25°C.
§Not more than one output should be shorted at a time, and duration of the short-circuit should not exceed one second.
NOTE 2: With all outputs open, inputs A through D grounded, and 4.5 V applies to S0, S1, clear, and the serial inputs, I_{CC} is tested with a momentary GND, then 4.5 V, applied to clock.

switching characteristics, V_{CC} = 5 V, T_A = 25°C

PARAMETER		TEST CONDITIONS	MIN	TYP	MAX	UNIT
f_{max}	Maximum clock frequency	C_L = 15 pF, R_L = 280 Ω, See Figure 1	70	106		MHz
t_{PHL}	Propagation delay time, high-to-low-level output from clear			12.5	18.5	ns
t_{PLH}	Propagation delay time, low-to-high-level output from clock		4	8	12	ns
t_{PHL}	Propagation delay time, high-to-low-level output from clock		4	11	16.5	ns

PARAMETER MEASUREMENT INFORMATION

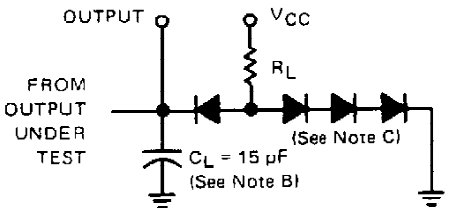

LOAD FOR OUTPUT UNDER TEST

TEST TABLE FOR SYNCHRONOUS INPUTS

DATA INPUT FOR TEST	S1	S0	OUTPUT TESTED (SEE NOTE E)
A	4.5 V	4.5 V	Q_A at t_{n+1}
B	4.5 V	4.5 V	Q_B at t_{n+1}
C	4.5 V	4.5 V	Q_C at t_{n+1}
D	4.5 V	4.5 V	Q_D at t_{n+1}
L Serial Input	4.5 V	0 V	Q_A at t_{n+4}
R Serial Input	0 V	4.5 V	Q_D at t_{n+4}

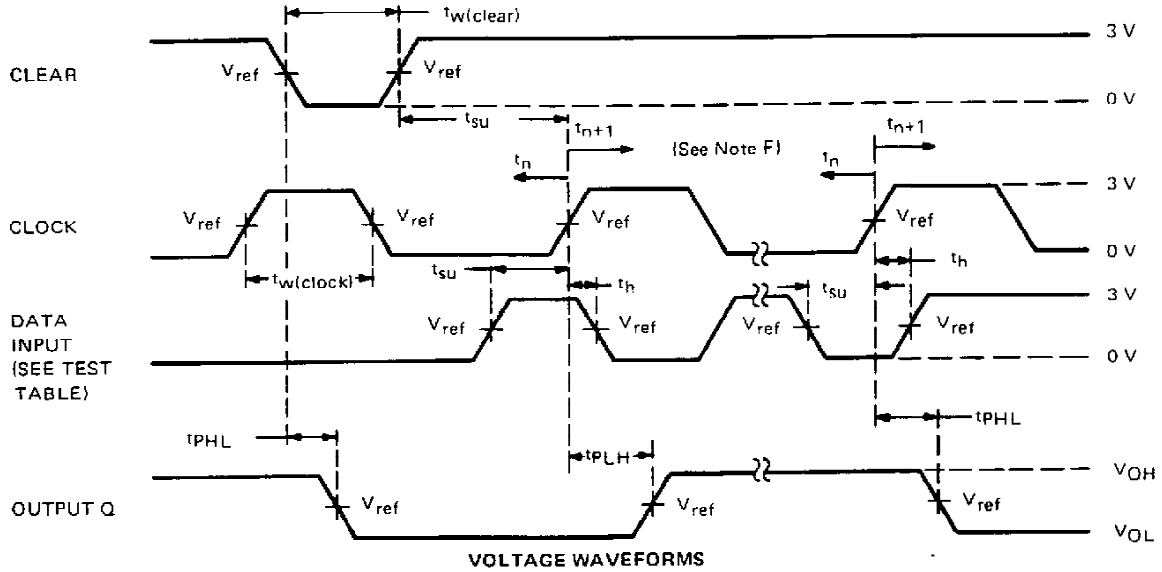

VOLTAGE WAVEFORMS

NOTES: A. The clock pulse generator has the following characteristics: $Z_{out} \approx 50\ \Omega$ and PRR $\leq$ 1 MHz, For '194, $t_r \leq 7$ ns and $t_f \leq 7$ ns. For 'LS194A, $t_r \leq 15$ ns and $t_f \leq 6$ ns. For 'S194, $t_r \leq 2.5$ ns and $t_f \leq 2.5$ ns. When testing f_{max}, vary PRR.

B. C_L includes probe and jig capacitance.

C. All diodes are 1N3064 or 1N916.

D. A clear pulse is applied prior to each test.

E. For '194 and 'S194, V_{ref} = 1.5 V; for 'LS194A, V_{ref} = 1.3 V.

F. Propagation delay times (t_{PLH} and t_{PHL}) are measured at t_{n+1}. Proper shifting of data is verified at t_{n+4} with a functional test.

G. t_n = bit time before clocking transition.
t_{n+1} = bit time after one clocking transition.
t_{n+4} = bit time after four clocking transitions.

FIGURE 1–SWITCHING TIMES

PACKAGING INFORMATION

Orderable Device	Status (1)	Package Type	Package Drawing	Pins	Package Qty	Eco Plan (2)	Lead/Ball Finish (6)	MSL Peak Temp (3)	Op Temp (°C)	Device Marking (4/5)	Samples
7604001EA	ACTIVE	CDIP	J	16	1	TBD	A42	N / A for Pkg Type	-55 to 125	7604001EA SNJ54S194J	Samples
7604001FA	ACTIVE	CFP	W	16	1	TBD	A42	N / A for Pkg Type	-55 to 125	7604001FA SNJ54S194W	Samples
7604001FA	ACTIVE	CFP	W	16	1	TBD	A42	N / A for Pkg Type	-55 to 125	7604001FA SNJ54S194W	Samples
JM38510/07601BEA	ACTIVE	CDIP	J	16	1	TBD	A42	N / A for Pkg Type	-55 to 125	JM38510/ 07601BEA	Samples
JM38510/07601BEA	ACTIVE	CDIP	J	16	1	TBD	A42	N / A for Pkg Type	-55 to 125	JM38510/ 07601BEA	Samples
JM38510/07601BFA	NRND	CFP	W	16	1	TBD	A42	N / A for Pkg Type	-55 to 125	JM38510/ 07601BFA	
JM38510/07601BFA	NRND	CFP	W	16	1	TBD	A42	N / A for Pkg Type	-55 to 125	JM38510/ 07601BFA	
JM38510/30601B2A	ACTIVE	LCCC	FK	20	1	TBD	POST-PLATE	N / A for Pkg Type	-55 to 125	JM38510/ 30601B2A	Samples
JM38510/30601B2A	ACTIVE	LCCC	FK	20	1	TBD	POST-PLATE	N / A for Pkg Type	-55 to 125	JM38510/ 30601B2A	Samples
JM38510/30601BEA	ACTIVE	CDIP	J	16	1	TBD	A42	N / A for Pkg Type	-55 to 125	JM38510/ 30601BEA	Samples
JM38510/30601BEA	ACTIVE	CDIP	J	16	1	TBD	A42	N / A for Pkg Type	-55 to 125	JM38510/ 30601BEA	Samples
JM38510/30601BFA	ACTIVE	CFP	W	16	1	TBD	A42	N / A for Pkg Type	-55 to 125	JM38510/ 30601BFA	Samples
JM38510/30601BFA	ACTIVE	CFP	W	16	1	TBD	A42	N / A for Pkg Type	-55 to 125	JM38510/ 30601BFA	Samples
M38510/07601BEA	ACTIVE	CDIP	J	16	1	TBD	A42	N / A for Pkg Type	-55 to 125	JM38510/ 07601BEA	Samples
M38510/07601BEA	ACTIVE	CDIP	J	16	1	TBD	A42	N / A for Pkg Type	-55 to 125	JM38510/ 07601BEA	Samples
M38510/07601BFA	NRND	CFP	W	16	1	TBD	A42	N / A for Pkg Type	-55 to 125	JM38510/ 07601BFA	
M38510/07601BFA	NRND	CFP	W	16	1	TBD	A42	N / A for Pkg Type	-55 to 125	JM38510/ 07601BFA	

Orderable Device	Status (1)	Package Type	Package Drawing	Pins	Package Qty	Eco Plan (2)	Lead/Ball Finish (6)	MSL Peak Temp (3)	Op Temp (°C)	Device Marking (4/5)	Samples
M38510/30601B2A	ACTIVE	LCCC	FK	20	1	TBD	POST-PLATE	N / A for Pkg Type	-55 to 125	JM38510/ 30601B2A	Samples
M38510/30601B2A	ACTIVE	LCCC	FK	20	1	TBD	POST-PLATE	N / A for Pkg Type	-55 to 125	JM38510/ 30601B2A	Samples
M38510/30601BEA	ACTIVE	CDIP	J	16	1	TBD	A42	N / A for Pkg Type	-55 to 125	JM38510/ 30601BEA	Samples
M38510/30601BEA	ACTIVE	CDIP	J	16	1	TBD	A42	N / A for Pkg Type	-55 to 125	JM38510/ 30601BEA	Samples
M38510/30601BFA	ACTIVE	CFP	W	16	1	TBD	A42	N / A for Pkg Type	-55 to 125	JM38510/ 30601BFA	Samples
M38510/30601BFA	ACTIVE	CFP	W	16	1	TBD	A42	N / A for Pkg Type	-55 to 125	JM38510/ 30601BFA	Samples
SN54194J	OBSOLETE	CDIP	J	16		TBD	Call TI	Call TI	-55 to 125		
SN54194J	OBSOLETE	CDIP	J	16		TBD	Call TI	Call TI	-55 to 125		
SN54LS194AJ	ACTIVE	CDIP	J	16	1	TBD	A42	N / A for Pkg Type	-55 to 125	SN54LS194AJ	Samples
SN54LS194AJ	ACTIVE	CDIP	J	16	1	TBD	A42	N / A for Pkg Type	-55 to 125	SN54LS194AJ	Samples
SN54S194J	ACTIVE	CDIP	J	16	1	TBD	A42	N / A for Pkg Type	-55 to 125	SN54S194J	Samples
SN54S194J	ACTIVE	CDIP	J	16	1	TBD	A42	N / A for Pkg Type	-55 to 125	SN54S194J	Samples
SN74194N	OBSOLETE	PDIP	N	16		TBD	Call TI	Call TI	0 to 70		
SN74194N	OBSOLETE	PDIP	N	16		TBD	Call TI	Call TI	0 to 70		
SN74LS194AD	ACTIVE	SOIC	D	16	40	Green (RoHS & no Sb/Br)	CU NIPDAU	Level-1-260C-UNLIM	0 to 70	LS194A	Samples
SN74LS194AD	ACTIVE	SOIC	D	16	40	Green (RoHS & no Sb/Br)	CU NIPDAU	Level-1-260C-UNLIM	0 to 70	LS194A	Samples
SN74LS194ADG4	ACTIVE	SOIC	D	16	40	Green (RoHS & no Sb/Br)	CU NIPDAU	Level-1-260C-UNLIM	0 to 70	LS194A	Samples
SN74LS194ADG4	ACTIVE	SOIC	D	16	40	Green (RoHS & no Sb/Br)	CU NIPDAU	Level-1-260C-UNLIM	0 to 70	LS194A	Samples
SN74LS194AN	ACTIVE	PDIP	N	16	25	Pb-Free (RoHS)	CU NIPDAU	N / A for Pkg Type	0 to 70	SN74LS194AN	Samples
SN74LS194AN	ACTIVE	PDIP	N	16	25	Pb-Free (RoHS)	CU NIPDAU	N / A for Pkg Type	0 to 70	SN74LS194AN	Samples
SN74LS194AN3	OBSOLETE	PDIP	N	16		TBD	Call TI	Call TI	0 to 70		

Orderable Device	Status (1)	Package Type	Package Drawing	Pins	Package Qty	Eco Plan (2)	Lead/Ball Finish (6)	MSL Peak Temp (3)	Op Temp (°C)	Device Marking (4/5)	Samples
SN74LS194AN3	OBSOLETE	PDIP	N	16		TBD	Call TI	Call TI	0 to 70		
SN74LS194ANE4	ACTIVE	PDIP	N	16	25	Pb-Free (RoHS)	CU NIPDAU	N / A for Pkg Type	0 to 70	SN74LS194AN	Samples
SN74LS194ANE4	ACTIVE	PDIP	N	16	25	Pb-Free (RoHS)	CU NIPDAU	N / A for Pkg Type	0 to 70	SN74LS194AN	Samples
SN74S194N	OBSOLETE	PDIP	N	16		TBD	Call TI	Call TI	0 to 70		
SN74S194N	OBSOLETE	PDIP	N	16		TBD	Call TI	Call TI	0 to 70		
SN74S194N3	OBSOLETE	PDIP	N	16		TBD	Call TI	Call TI	0 to 70		
SN74S194N3	OBSOLETE	PDIP	N	16		TBD	Call TI	Call TI	0 to 70		
SNJ54LS194AFK	NRND	LCCC	FK	20	1	TBD	POST-PLATE	N / A for Pkg Type	-55 to 125	SNJ54LS 194AFK	
SNJ54LS194AFK	NRND	LCCC	FK	20	1	TBD	POST-PLATE	N / A for Pkg Type	-55 to 125	SNJ54LS 194AFK	
SNJ54LS194AJ	ACTIVE	CDIP	J	16	1	TBD	A42	N / A for Pkg Type	-55 to 125	SNJ54LS194AJ	Samples
SNJ54LS194AJ	ACTIVE	CDIP	J	16	1	TBD	A42	N / A for Pkg Type	-55 to 125	SNJ54LS194AJ	Samples
SNJ54LS194AW	NRND	CFP	W	16	1	TBD	A42	N / A for Pkg Type	-55 to 125	SNJ54LS194AW	
SNJ54LS194AW	NRND	CFP	W	16	1	TBD	A42	N / A for Pkg Type	-55 to 125	SNJ54LS194AW	
SNJ54S194FK	NRND	LCCC	FK	20	1	TBD	POST-PLATE	N / A for Pkg Type	-55 to 125	SNJ54S 194FK	
SNJ54S194FK	NRND	LCCC	FK	20	1	TBD	POST-PLATE	N / A for Pkg Type	-55 to 125	SNJ54S 194FK	
SNJ54S194J	ACTIVE	CDIP	J	16	1	TBD	A42	N / A for Pkg Type	-55 to 125	7604001EA SNJ54S194J	Samples
SNJ54S194J	ACTIVE	CDIP	J	16	1	TBD	A42	N / A for Pkg Type	-55 to 125	7604001EA SNJ54S194J	Samples
SNJ54S194W	ACTIVE	CFP	W	16	1	TBD	A42	N / A for Pkg Type	-55 to 125	7604001FA SNJ54S194W	Samples
SNJ54S194W	ACTIVE	CFP	W	16	1	TBD	A42	N / A for Pkg Type	-55 to 125	7604001FA SNJ54S194W	Samples

(1) The marketing status values are defined as follows:
ACTIVE: Product device recommended for new designs.
LIFEBUY: TI has announced that the device will be discontinued, and a lifetime-buy period is in effect.
NRND: Not recommended for new designs. Device is in production to support existing customers, but TI does not recommend using this part in a new design.
PREVIEW: Device has been announced but is not in production. Samples may or may not be available.

OBSOLETE: TI has discontinued the production of the device.

(2) Eco Plan - The planned eco-friendly classification: Pb-Free (RoHS), Pb-Free (RoHS Exempt), or Green (RoHS & no Sb/Br) - please check http://www.ti.com/productcontent for the latest availability information and additional product content details.
TBD: The Pb-Free/Green conversion plan has not been defined.
Pb-Free (RoHS): TI's terms "Lead-Free" or "Pb-Free" mean semiconductor products that are compatible with the current RoHS requirements for all 6 substances, including the requirement that lead not exceed 0.1% by weight in homogeneous materials. Where designed to be soldered at high temperatures, TI Pb-Free products are suitable for use in specified lead-free processes.
Pb-Free (RoHS Exempt): This component has a RoHS exemption for either 1) lead-based flip-chip solder bumps used between the die and package, or 2) lead-based die adhesive used between the die and leadframe. The component is otherwise considered Pb-Free (RoHS compatible) as defined above.
Green (RoHS & no Sb/Br): TI defines "Green" to mean Pb-Free (RoHS compatible), and free of Bromine (Br) and Antimony (Sb) based flame retardants (Br or Sb do not exceed 0.1% by weight in homogeneous material)

(3) MSL, Peak Temp. - The Moisture Sensitivity Level rating according to the JEDEC industry standard classifications, and peak solder temperature.

(4) There may be additional marking, which relates to the logo, the lot trace code information, or the environmental category on the device.

(5) Multiple Device Markings will be inside parentheses. Only one Device Marking contained in parentheses and separated by a "~" will appear on a device. If a line is indented then it is a continuation of the previous line and the two combined represent the entire Device Marking for that device.

(6) Lead/Ball Finish - Orderable Devices may have multiple material finish options. Finish options are separated by a vertical ruled line. Lead/Ball Finish values may wrap to two lines if the finish value exceeds the maximum column width.

Important Information and Disclaimer: The information provided on this page represents TI's knowledge and belief as of the date that it is provided. TI bases its knowledge and belief on information provided by third parties, and makes no representation or warranty as to the accuracy of such information. Efforts are underway to better integrate information from third parties. TI has taken and continues to take reasonable steps to provide representative and accurate information but may not have conducted destructive testing or chemical analysis on incoming materials and chemicals. TI and TI suppliers consider certain information to be proprietary, and thus CAS numbers and other limited information may not be available for release.

In no event shall TI's liability arising out of such information exceed the total purchase price of the TI part(s) at issue in this document sold by TI to Customer on an annual basis.

OTHER QUALIFIED VERSIONS OF SN54194, SN54LS194A, SN54S194, SN74194, SN74LS194A, SN74S194 :

- Catalog: SN74194, SN74LS194A, SN74S194
- Military: SN54194, SN54LS194A, SN54S194

NOTE: Qualified Version Definitions:

- Catalog - TI's standard catalog product

- Military - QML certified for Military and Defense Applications

IMPORTANT NOTICE

Texas Instruments Incorporated and its subsidiaries (TI) reserve the right to make corrections, enhancements, improvements and other changes to its semiconductor products and services per JESD46, latest issue, and to discontinue any product or service per JESD48, latest issue. Buyers should obtain the latest relevant information before placing orders and should verify that such information is current and complete. All semiconductor products (also referred to herein as “components”) are sold subject to TI’s terms and conditions of sale supplied at the time of order acknowledgment.

TI warrants performance of its components to the specifications applicable at the time of sale, in accordance with the warranty in TI’s terms and conditions of sale of semiconductor products. Testing and other quality control techniques are used to the extent TI deems necessary to support this warranty. Except where mandated by applicable law, testing of all parameters of each component is not necessarily performed.

TI assumes no liability for applications assistance or the design of Buyers’ products. Buyers are responsible for their products and applications using TI components. To minimize the risks associated with Buyers’ products and applications, Buyers should provide adequate design and operating safeguards.

TI does not warrant or represent that any license, either express or implied, is granted under any patent right, copyright, mask work right, or other intellectual property right relating to any combination, machine, or process in which TI components or services are used. Information published by TI regarding third-party products or services does not constitute a license to use such products or services or a warranty or endorsement thereof. Use of such information may require a license from a third party under the patents or other intellectual property of the third party, or a license from TI under the patents or other intellectual property of TI.

Reproduction of significant portions of TI information in TI data books or data sheets is permissible only if reproduction is without alteration and is accompanied by all associated warranties, conditions, limitations, and notices. TI is not responsible or liable for such altered documentation. Information of third parties may be subject to additional restrictions.

Resale of TI components or services with statements different from or beyond the parameters stated by TI for that component or service voids all express and any implied warranties for the associated TI component or service and is an unfair and deceptive business practice. TI is not responsible or liable for any such statements.

Buyer acknowledges and agrees that it is solely responsible for compliance with all legal, regulatory and safety-related requirements concerning its products, and any use of TI components in its applications, notwithstanding any applications-related information or support that may be provided by TI. Buyer represents and agrees that it has all the necessary expertise to create and implement safeguards which anticipate dangerous consequences of failures, monitor failures and their consequences, lessen the likelihood of failures that might cause harm and take appropriate remedial actions. Buyer will fully indemnify TI and its representatives against any damages arising out of the use of any TI components in safety-critical applications.

In some cases, TI components may be promoted specifically to facilitate safety-related applications. With such components, TI’s goal is to help enable customers to design and create their own end-product solutions that meet applicable functional safety standards and requirements. Nonetheless, such components are subject to these terms.

No TI components are authorized for use in FDA Class III (or similar life-critical medical equipment) unless authorized officers of the parties have executed a special agreement specifically governing such use.

Only those TI components which TI has specifically designated as military grade or “enhanced plastic” are designed and intended for use in military/aerospace applications or environments. Buyer acknowledges and agrees that any military or aerospace use of TI components which have ***not*** been so designated is solely at the Buyer's risk, and that Buyer is solely responsible for compliance with all legal and regulatory requirements in connection with such use.

TI has specifically designated certain components as meeting ISO/TS16949 requirements, mainly for automotive use. In any case of use of non-designated products, TI will not be responsible for any failure to meet ISO/TS16949.

Products		**Applications**	
Audio	www.ti.com/audio	Automotive and Transportation	www.ti.com/automotive
Amplifiers	amplifier.ti.com	Communications and Telecom	www.ti.com/communications
Data Converters	dataconverter.ti.com	Computers and Peripherals	www.ti.com/computers
DLP® Products	www.dlp.com	Consumer Electronics	www.ti.com/consumer-apps
DSP	dsp.ti.com	Energy and Lighting	www.ti.com/energy
Clocks and Timers	www.ti.com/clocks	Industrial	www.ti.com/industrial
Interface	interface.ti.com	Medical	www.ti.com/medical
Logic	logic.ti.com	Security	www.ti.com/security
Power Mgmt	power.ti.com	Space, Avionics and Defense	www.ti.com/space-avionics-defense
Microcontrollers	microcontroller.ti.com	Video and Imaging	www.ti.com/video
RFID	www.ti-rfid.com		
OMAP Applications Processors	www.ti.com/omap	**TI E2E Community**	e2e.ti.com
Wireless Connectivity	www.ti.com/wirelessconnectivity		

Mailing Address: Texas Instruments, Post Office Box 655303, Dallas, Texas 75265
Copyright © 2015, Texas Instruments Incorporated

Unikeyic Electronics

Global Electronic Components Distributor

Click to view pricing, inventory, delivery, and lifecycle information:

Texas Instruments:

ISO124U/1K MSP430F5438AIPZR THMC50DBQR RI-I02-114B-01 SN74ACT3631-15PQ SN74AS1034ANSR SN74AS832BDW TL750L12CP TPA005D14DCA TPS25200DRVR DRV8821DCA SN74ALS257AD LM311PW LM5110-2M/NOPB OPA2330AIDRBT SN74ALS258ADR TLV2451IDBVR TPS2835PWPR INA228AIDGSR OPA643P SN74ALS1640AN TPS3809I50DBVR LM4050CEM3-5.0 TL074IDR UCC3752D BQ25616RTWR TPS3307-25DGNR TVP5150AM1PBSR SN74ACT7807-20FN SN74ALVC244PWE4