

# KISSLING
# BATTERY DISCONNECTOR

## Series 35 / 200A - from TE Connectivity (TE)

Our manually operated battery disconnector up to 200 amps meets the most demanding requirements in all vehicle applications. The nominal current ratings refer to continuous DC current at up to 100% duty cycle and the switches are built to switch under full load. Our battery disconnector can handle up to five times the continuous current level for up to 10 seconds as overload current. (Overload current of 1000 amps for 30 seconds)

All series 35 battery disconnectors are sealed with a technology that meets the IP67 and IP6K9K (steam preassure cleaning) standards and the switches are designed to operate at temperatures between -40°C and +85°C.

Options include single or dual pole configurations, various mounting and locking (security) alternatives as well as different shapes and colors of the operating handles to serve your requirements.

Battery disconnectors from our KISSLING product family are able to be operated under fall load, to ensure a safe disconnection from the battery in emergency conditions. The range also has optional protection against theft or unauthorized use of vehicles or equipment by removable or lockable operating elements.

### Features

- Sealed housing conforms to IP6K9K
- Robust design
- 6G shock and 4G vibration resistant
- Main contact current rated for continuous current and 100% duty cycle
- Battery disconnection under load in case of an emergency
- Variable or scalable mounting options
- Safety in the vehicle service by so called “LOCK” options (only two pole)

### Applications

- Truck
- Bus
- Ground support vehicles
- Construction and agricultural vehicles
- Railway
- Aircraft

## Specification

### Technical Data

| | |
|---|---|
| Temperature range | -40°C to +85°C |
| Protection | IP67 / IEC 529 |
| Vibration | 4g (50-2000 HZ) |
| Shock | 6g, 11 msec |
| Thread sizes / Torque | M8 = 12 - 13Nm \| M10 = 15 - 20Nm |

### Electrical Data

| | |
|---|---|
| Min. insulation resistance | 100MΩ |
| Dielectric withstanding voltage | 1050V / 1 min at 50Hz |
| Max. contact drop max. load | 150 mV |
| Voltage range | up to 32VDC (optional up to 80VDC) |
| Duty rating continuous | 200A @ 70mm² / 300A @ 95mm² |
| Overload | 500A - 180sec / 1000A - 30sec |
| Wire section | min 70mm² / min 95mm² |
| Mounting position | optional |

### Available Keys

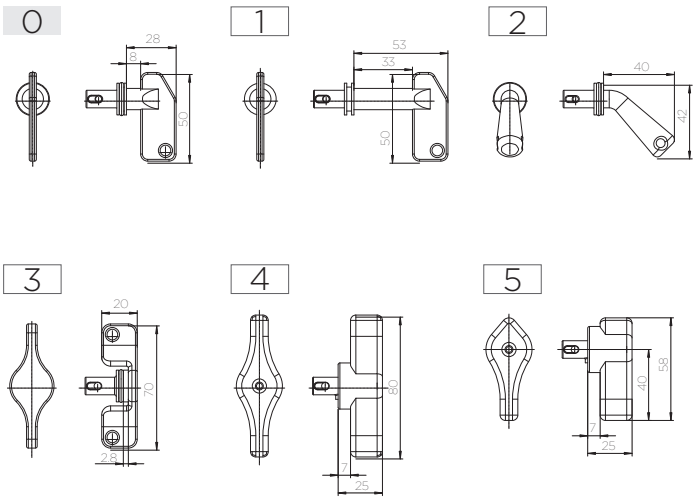


**Key Options**

| | |
|---|---|
| 0 | Standard |
| 1 | Standard long |
| 2 | 45° turn off |
| 3 | T-handle |
| 4 | Double wing |
| 5 | Pointer key |

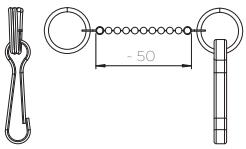


**Key with chain**

| | |
|---|---|
| 6 | Standard |
| 7 | Standard long |
| 8 | 45° turn off |
| 9 | T-handle |

### Keyholder

Not for switches with central mounting / optional available for 2-pole version

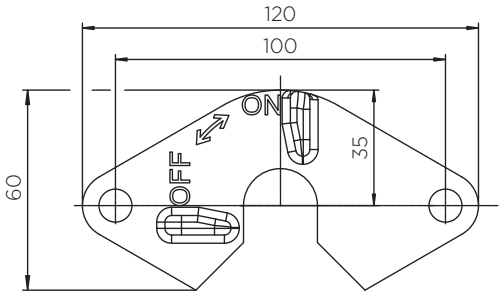

## Technical drawings

### 1-pole standard mounitng

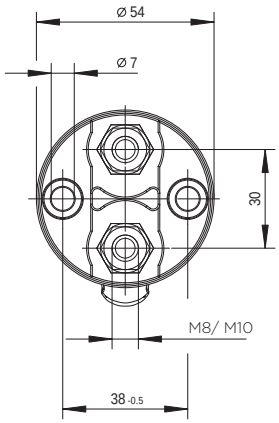


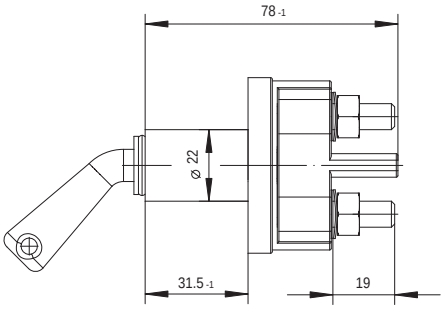


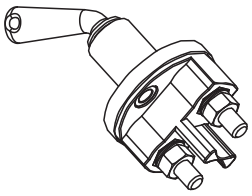

Circuit



### 1-pole with longflange

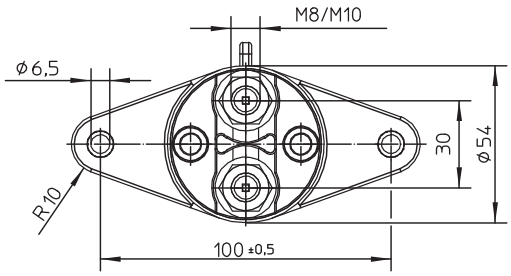


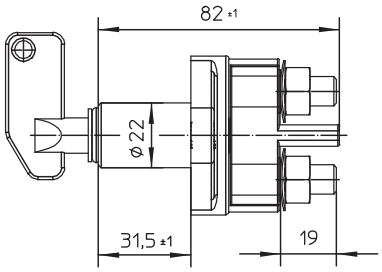


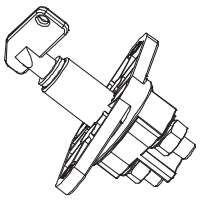

Circuit



### 1-pole with central mounting

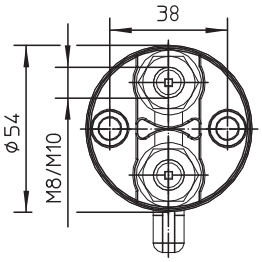


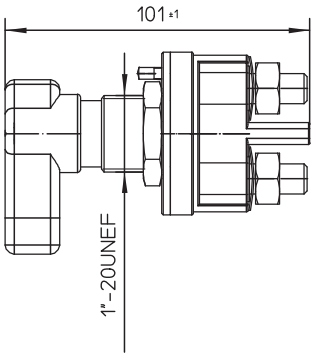


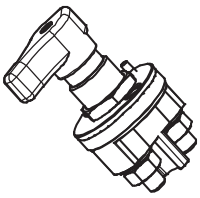

Circuit



### 2-poles with longflange

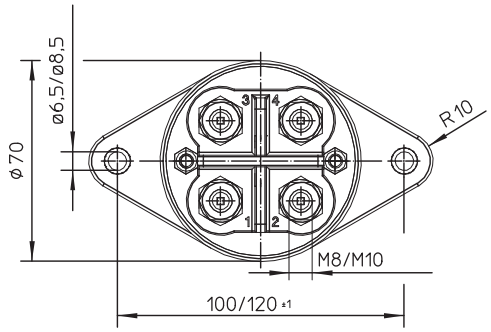


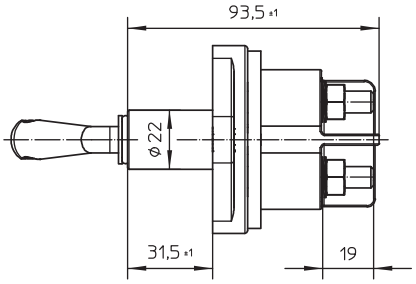


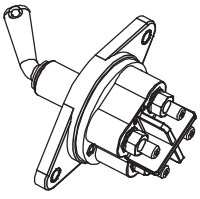

Circuit

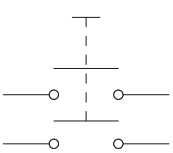

## Ordering Information

**Part Number**
example: 35.210.000.R
35.___.___.___.__

**Current**

| | |
|---|---|
| 2 | Current 200A |

**No. Poles**

| | |
|---|---|
| 1 | 1-pole |
| 2 | 2-poles |

**Mounting 1-pole**

| | |
|---|---|
| 0 | Standard mounting |

**Mounting 2-poles**

| | |
|---|---|
| 1 | Longflange 100 / Ø 6,5 |
| 2 | Longflange 120 / Ø 6,5 |
| 3 | Central mounting |
| 4 | Longflange 100 / Ø 8,5 |
| 5 | Longflange 120 / Ø 8,5 |

Mounting option 1,3 and 4 also available for 1-pole version

**Key colours**

| | |
|---|---|
| R | red |
| S | black |
| GN | green |
| GE | yellow |

**Key type**

| | |
|---|---|
| 0 | removable |
| 1 | not removable |

**Key options**

| | |
|---|---|
| X | see overview page 1 |

**Thread**

| | |
|---|---|
| 0 | M8 |
| 1 | M10 |

**te.com**

TE Connectivity, TE, TE connectivity (logo) and KISSLING (word) are trademarks owned or licensed by the TE Connectivity family of companies. All other logos, products and/or company names referred to herein might be trademarks of their respective owners.

The information given herein, including drawings, illustrations and schematics which are intended for illustration purposes only, is believed to be reliable. However, TE Connectivity makes no warranties as to its accuracy or completeness and disclaims any liability in connection with its use. TE Connectivity's obligations shall only be as set forth in TE Connectivity's Standard Terms and Conditions of Sale for this product and in no case will TE Connectivity be liable for any incidental, indirect or consequential damages arising out of the sale, resale, use or misuse of the product. Users of TE Connectivity products should make their own evaluation to determine the suitability of each such product for the specific application.

© 2020 TE Connectivity | All Rights Reserved.
K1166706 | Version 08/2020

# Unikeyic Electronics

Global Electronic Components Distributor

Click to view pricing, inventory, delivery, and lifecycle information:

## TE Connectivity:

281990-2 1-794222-0 2-32562-2 CRGCQ0805F150R SMV3W5M6JT 2-520103-2 141991-2 2-520128-2 SMW73R0JT 1743455-2 1MM-HU-D10-VS-00-F-TBP 352116RFT 36161 640174-1 2-292161-3 2834055-1 3-1393225-0 917790-2 1393431-1 292230-8 650075-000 CRGCQ2010J3K3 1488167-1 1969656-1 2377783-2 3430B2F51RTDF 35402K7FT 1-1743284-2 917696-1 936348-1