

HexaShield High-Performance EMC/EMI Adapters

Compact, Lightweight, High-Performance Adapters

HexaShield High-Performance EMC/EMI Adapters

Compact, Lightweight, High-Performance Adapters



OUTSTANDING PERFORMANCE

- Up to four shielded cables accommodated by each ferrule
- Easy reentry: To insert or remove ferrules from the HexaShield adapter, simply loosen the back nut
- Strain relief on each individual cable

RUGGED

- Superior protection: No degradation of shielding performance
- Mechanical and environmental protection equal to backshells complying with MIL-C-85049 Category 3B

VERSATILE

- Available in straight, 45° and 90° angles, as well as swept and long bodies

COMPACT/LIGHTWEIGHT

- Compact size - not exceeding outer diameter of connector
- Weight reduction, by possibly eliminating the need for overall shielding

MARKETS

- Commercial Aircraft
- Military Aircraft
- Missiles and Launch Support
- Ground Defense
- Military Marine

TE, a longtime leader in harnessing technology, has written a new chapter in EMC shielding with the introduction of the Raychem brand HexaShield EMC adapter.

Designed to provide EMC protection solutions for both commercial and military applications, HexaShield adapters represent a significant improvement over pigtail termination methods. By providing 360-degree EMC shielding on the termination area of each individual cable, HexaShield adapters provide outstanding shielding effectiveness.

HexaShield adapters are simple to install, easy to maintain, and dependably resistant to mechanical and environmental stresses.

Simple Assembly and Installation

1. Solder cable or wire shield to a ferrule with a heat-shrinkable SolderShield terminator.
2. Clip ferrule into one of the grounding star cavities.
3. Secure the back nut of the HexaShield adapter so that the conic ring assembly automatically compresses the ferrules.

Designed to Corresponding Connector Specifications

Two Platings Available	TE Product Specifications
Electroless nickel (MIL-DTL-26074)	RB-110 and RB-114
Olive drab cadmium (QQ-P-416 Type II Class 3)	—

* Contact TE for additional platings.

Installation Procedures

Installation procedure for HET-A-02X and HET-A-04X (RPIP-696-00)	Installation procedure for HET-03X (RPIP-696-03)	General procedure for cylindrical connectors, right-angle body (RPIP-696-07)
General procedure for ARINC 600 Size II connectors (RPIP-696-01)	General procedure for cylindrical connectors, straight body (RPIP-696-04)	—
General procedure for ARINC 600 Size II connectors (RPIP-696-02)	—	—
RPIP-696-13 HexaShield Filling Factors	—	—

TE Components . . . TE Technology . . . TE Know-how . . .

AMP | AGASTAT | CII | HARTMAN | KILOVAC | MICRODOT | NANONICS | POLAMCO | Raychem SEACON | Rochester | DEUTSCH

Empower Engineers to Solve Problems, Moving the World Forward.

Kit Descriptions

HexaShield Adapters for Circular Connectors: Straight, 45°and 90° Assemblies

Item	Description
1	Straight adapter assembly
2	Conic ring assembly
3	Star Plain (Standard) Drilled (Option) Split (Option)
4	Straight adapter assembly - “L” version - nominally 0.5” [12.7] longer body
5	45° adapter assembly - welded
6	45° adapter assembly - swept
7	90° adapter assembly - welded
8	90° adapter assembly - swept Standard products shown. Variants available on request. Split star assemblies are shown on relevant customer drawings where applicable.

Item	Adapter Options
A	Back Nut
B	Tinel adapter assembly Tinel-Lock ring for single braid
C	Bandstrap adapter assembly
D	Conduit adapter

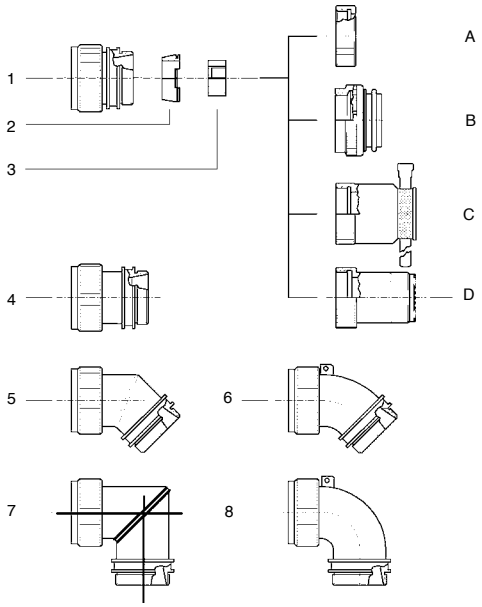

HexaShield Adapters for ARINC 404/600 Connectors: Sizes 1, 2, 3 and 4 Assemblies

Item	Description
1	Left side support
2	Right side support
3	Retention bars
4	Body assemblies Body Holding nut Conic ring assembly Star _ Back nut
5	Cavity plug assemblies Plug Holding nut
6	Pan head screws - 4-40 UNC
7	Spring washers
	ARINC 600 Size 2 shown Stars are available as plain, drilled or split. See relevant customer drawings for further information

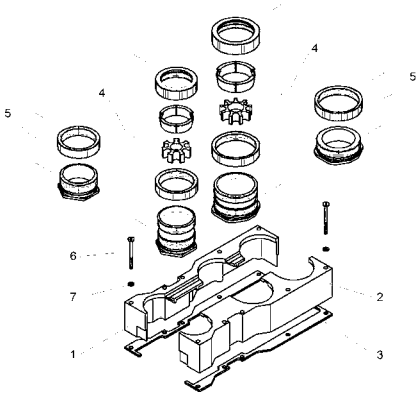

Ordering Information: Part Numbering for Standard Products

HexaShield Adapters for Circular Connectors

HEXYY L -AY -00 S -YY -AY -Y -DS

Drilled Star:
See applicable customer drawing for star options

Type of Back Nut:
1 = Standard back nut
2 = Clamping nut for tinel ring (for overbraid protection)
3 = Clamping nut with bandstrap
C = Clamping nut for conduit applicator

Max. number of ferrules that can be accommodated
See applicable customer drawing for options

Hexashield Size Code:
See applicable customer drawing for order number (shel

S = Swept version

Configuration:
00 = Straight body
45 = 45 degree angle body
90 = 90 degree angle body

Type of Plating:
B = Cadmium plated
C = Electroless nickel

L = Long body
See applicable customer drawing for availability

Connector Code Number:
21 = MIL-C-26482 Series 1
40 = MIL-DTL-38999 Series 3 and 4
41 = MIL-DTL-38999 Series 1 and 2
54 = MIL-DTL-83723 Series 1 and 3
MIL-C-25482 Series 2

Ordering Information (Continued)

HexaShield Adapters for Collins Connectors

HEXDB-AC-00-A9-1

00 = Straight body
90 = Right-angle body

HexaShield Adapters for ARINC 600 Connectors

HEXA6-AY-00-YY-AY-Y

Clamping nut version:
1 = Clamping nut alone
2 = Clamping nut for tinel ring

Number of ferrules:
18 for ARINC 600 size II (A and B cavities)
25 for ARINC 600 size II (A, B and C cavities)
18 for ARINC 600 size III (A and B cavities)
See applicable customer drawing for options

ARINC Connector Size:
02 = ARINC 600 size II
03 = ARINC 600 size III

Configuration:
00 = Straight body
90 = Right-angle body

Plating:
B = Cadmium plated
C = Electroless nickel

Drilled Stars are standard on ARINC 600 adapters.

Part Numbering of Ferrule Kits*

HET-A-02X for small-size cable with SolderShield terminator
HET-A-03X for connection of unshielded cables
ferrules with heat-shrinkable tubing (no shield)
HET-A-04X for large-size cables with SolderShield terminator

Type of Plating:
B = Cadmium plated
C = Electroless nickel

HEX07-AX ferrule - solid blank for use when a HET-A is not needed

Type of Plating:
B = Cadmium plated
C = Electroless nickel

*Not all part numbers are standard; your local TE representative will assist you in selecting the appropriate standard product

EMC Performance

Transfer Impedance

Product Facts

- Outperforms traditional pigtail termination, especially in HIRF performance
- Withstands 10-kA peak current lightning transients of SAE AE4L-87-3

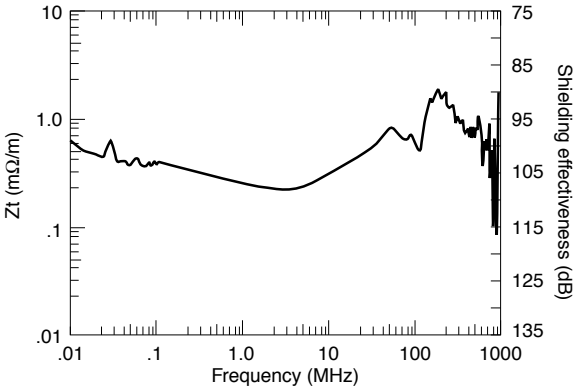

HexaShield size: 23

Cable: TE 5024H8424 (one cable installed)

Test method: CEI 96-1

Protection Level

Generalized system performance (Actual system performance in any one test method may differ.)

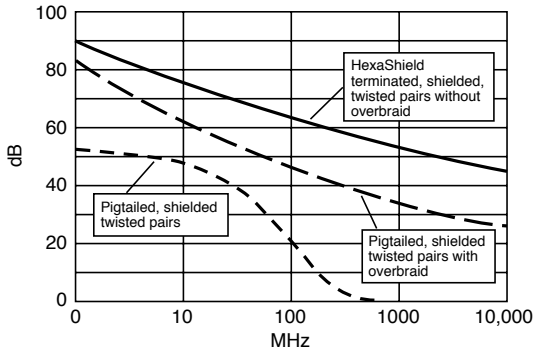

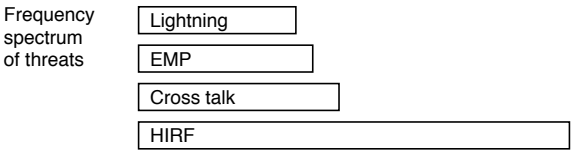

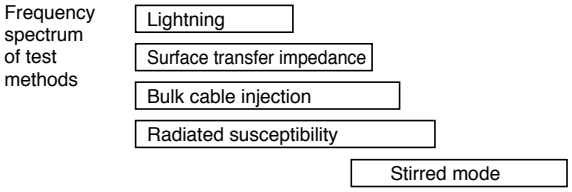

EMC Performance (Continued)

Typical HexaShield Applications

Civilian and military aircraft
Avionics
Fighter aircraft
Missiles and launch support systems
Armored and military support vehicles
Navy ships (total shipboard hardening)
Military communications
Engines (FADEC harness hardening)

HexaShield Product Range

Accommodates the following connector types*:
MIL-C-26482 Series 1
MIL-DTL-38999 Series 1, 2, 3, and 4
MIL-C-26482 Series 2
MIL-DTL-83723 Series 1 and 3
DBAD
ARINC 600
ARINC 404

*Please contact TE for other connector types and special requests.

Flexible EMI Termination System



Individual cable braid terminations offering multiple connector pin repairs with zero pig-tail length for superior EMC performance, without the need for gross over-braid.

HexaShield F provides the following advantages:

- Installation ease reduces shield termination labor cost
- Ease of maintenance and repair allows performance of normal connector contact repairs, addition or change of a cable multiple times
- Small size and lightweight
- Sound mechanical performances of termination
- Provides strain relief on individual cables
- Better shielding performance of termination
- Available in various star sizes and platings (TE FLX40 series drawings. Contact TE for detailed information)

Applications

HexaShield F termination system is especially useful for high-speed quadrax cable (IEEE 1394) applications.

Product Facts

- Maintains electrical integrity while connecting controlled electrical cables to mil-spec connectors
- Flexible and versatile design fits most mil-spec connectors, shielded signal wires, and ARINC connectors
- Zero pigtail length braid termination
- Modular cable termination using ferrules, SolderSleeve devices, stars, and braid allows for repeated cable segment repairability
- Stars for ferrules with band strap (Tinel-Lock ring can be available) allows for easy re-entry for repair and replacement while providing a secure attachment
- Various ferrule count and star positions with optional plugs available to accommodate various cables and plugs

LET'S CONNECT

We make it easy to connect with our experts and are ready to provide all the support you need. Just call your local support number or visit te.com to chat with a Product Information Specialist.

Technical Support

te.com/support-center

North America	+1 800 522 6752	Asia Pacific	+86 400 820 6015
North America (Toll)	+1 717 986 7777	Japan	+81 044 844 8180
EMEA/South Africa	+800 0440 5100	Australia	+61 2 9554 2695
EMEA (Toll)	+31 73 624 6999	New Zealand	+64 (0) 9 634 4580
India (Toll-Free)	+800 440 5100		

te.com

AMP, AGASTAT, CII, DEUTSCH, HARTMAN, HexaShield, KILOVAC, MICRODOT, NANONICS, POLAMCO, Raychem, SEACON, TE, TE Connectivity and the TE connectivity (logo) are trademarks owned or licensed by TE Connectivity. Other products, logos, and company names mentioned herein may be trademarks of their respective owners.

While TE Connectivity (TE) has made every reasonable effort to ensure the accuracy of the information herein, nothing herein constitutes any guarantee that such information is error-free, or any other representation, warranty or guarantee that the information is accurate, correct, reliable or current. The TE entity issuing this publication reserves the right to make any adjustments to the information contained herein at any time without notice. All implied warranties regarding the information contained herein, including, but not limited to, any implied warranties of merchantability or fitness for a particular purpose are expressly disclaimed. The dimensions herein are for reference purposes only and are subject to change without notice. Specifications are subject to change without notice.

Consult TE for the latest dimensions and design specifications.

© 2019 TE Connectivity All Rights Reserved.

2355247-1 04/19