

Inductive sensor

NBN40-L2-A2-V1-3G-3D

- Sensor head bidirectional and rotatable
- 40 mm non-flush
- 4-wire DC
- Quick mounting bracket
- 4-way LED indicator
- ATEX-/IECEx-approvals for zone 2/22 (Ex ec/tc)

Dimensions

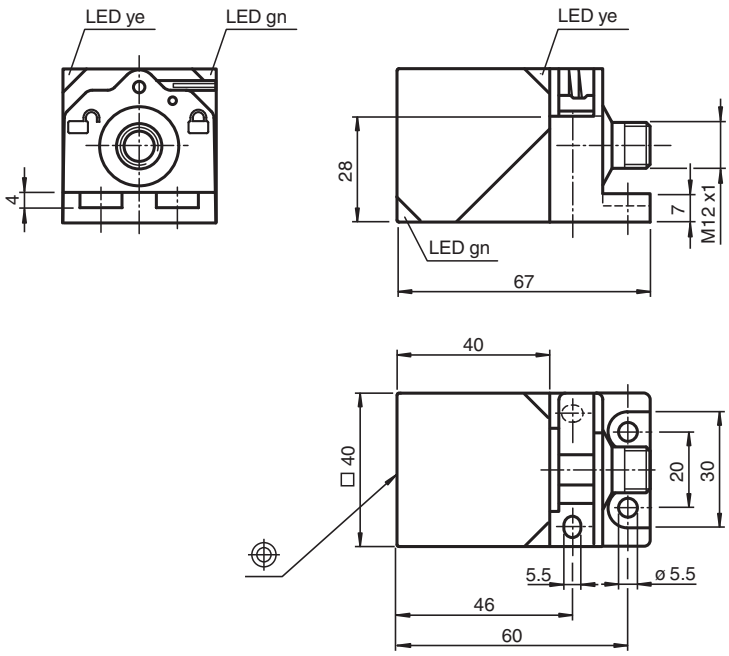

Technical Data

General specifications		
Switching function		complementary
Output type		PNP
Rated operating distance	s_n	40 mm
Installation		non-flush
Output polarity		DC
Assured operating distance	s_a	0 ... 32.4 mm
Actual operating distance	s_r	36 ... 44 mm
Reduction factor r_{Al}		0.31
Reduction factor r_{Cu}		0.3

Release date: 2024-05-28 Date of issue: 2024-06-05 Filename: 70126065_eng.pdf

Technical Data

Reduction factor r_{304}		0.74
Reduction factor r_{Brass}		0.39
Output type		4-wire
Nominal ratings		
Operating voltage	U_B	10 ... 30 V DC
Switching frequency	f	0 ... 180 Hz
Hysteresis	H	typ. 5 %
Reverse polarity protection		reverse polarity protected
Short-circuit protection		pulsing
Voltage drop	U_d	≤ 2 V
Operating current	I_L	0 ... 200 mA
Off-state current	I_r	0 ... 0.5 mA
No-load supply current	I_0	≤ 20 mA
Time delay before availability	t_v	80 ms
Operating voltage indicator		LED, green
Switching state indicator		LED, yellow
Functional safety related parameters		
$MTTF_d$		1057 a
Mission Time (T_M)		20 a
Diagnostic Coverage (DC)		0 %
Compliance with standards and directives		
Standard conformity		
Standards		EN IEC 60947-5-2
Approvals and certificates		
IECEx approval		
Equipment protection level Gc (ec)		IECEx TUR 21.0019X
Equipment protection level Dc (tc)		IECEx TUR 21.0020X
ATEX approval		
Equipment protection level Gc (ec)		TÜV 20 ATEX 8525 X
Equipment protection level Dc (tc)		TÜV 20 ATEX 8526 X
UL approval		cULus Listed, General Purpose
Marine approval		DNVGL TAA0000160
Ambient conditions		
Ambient temperature		-25 ... 85 °C (-13 ... 185 °F)
Storage temperature		-40 ... 85 °C (-40 ... 185 °F)
Mechanical specifications		
Connection type		Connector plug M12 x 1 , 4-pin
Housing material		PA
Sensing face		PA
Degree of protection		IP69K
Cable		
Cable diameter		3.3 mm ± 0.15 mm
Mass		130 g
Dimensions		
Height		40 mm
Width		40 mm
Length		67 mm
General information		
Use in the hazardous area		see instruction manuals

Release date: 2024-05-28 Date of issue: 2024-06-05 Filename: 70126065_eng.pdf

Connection

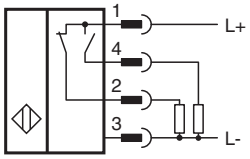

Connection Assignment

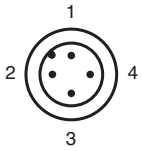

Wire colors in accordance with EN 60947-5-2

1	BN	(brown)
2	WH	(white)
3	BU	(blue)
4	BK	(black)

Installation

Requirement for male cordset to achieve IP degree of protection

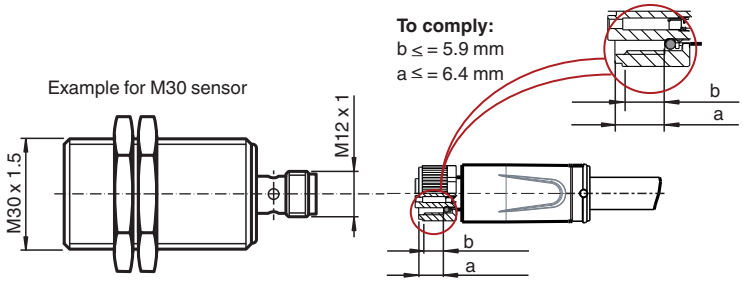

b = max. distance from start of thread to seal
a = max. distance from start of union nut to seal

Release date: 2024-05-28 Date of issue: 2024-06-05 Filename: 70126065_eng.pdf