KSTW010A0A Barracuda* Series; DC-DC Converter Power Modules

36-75V_{dc} Input; 5.0V_{dc}, 10A Output

RoHS Compliant



Description

The KSTW010A0A series power modules are isolated DOSA compliant 1/16th brick dc-dc converters that operate over a wide input voltage range of 36V_{dc} -75V_{dc} and provide a single precisely regulated output voltage at 5.0V_{dc}. The output is fully isolated from the input, allowing versatile polarity configurations and grounding connections. The modules exhibit high efficiency of 91% typical at full load. Built-in filtering for both input and output minimizes the need for external filtering. The module is fully self-protected with output over-current and over-voltage, over-temperature and input under voltage shutdown control. Optional features include negative or positive on/off logic and SMT connections.

Applications

- Wireless Networks
- Hybrid power architectures
- Optical and Access Network Equipment
- Enterprise Networks including Power over Ethernet (PoE)
- Industrial markets

Options

- Negative Remote On/Off logic (preferred)
- Surface Mount/Tape and Reel (-SR Suffix)
- Auto-restart Over current/Over voltage protections (preferred)
- Shorter through hole pin trim

See Footnote on Page No. 2

© 2023 OmniOn Power Inc. All rights reserved.

Features

- Compliant to RoHS Directive 2011/65/EU and amended Directive (EU) 2015/863.
- Compliant to REACH Directive (EC) No 1907/2006
- Wide Input Voltage Range, $36V_{dc}$ to $75V_{dc}$
- No minimum load
- High efficiency – 91% at full load (V_{IN}=$48V_{dc}$)
- Constant switching frequency
- Low output ripple and noise
- Small Size and low profile, follows DOSA standard 1/16th footprint 33.0 mm x 22.9 mm x 9.3 mm (1.30 in x 0.9 in x 0.37 in)
- Surface mount (SMT) or Through hole (TH)
- Reflow process compliant, both SMT and TH versions
- Positive Remote On/Off logic
- Output overcurrent/voltage protection (hiccup)
- Over-temperature protection
- Output Voltage adjust: 80% to 110% of $V_{o,nom}$
- Wide operating temperature range (-40°C to 85°C)
- ANSI/UL* 62368-1 and CAN/CSA† C22.2 No. 62368-1 Recognized, DIN VDE‡ 0868-1/A11:2017 (EN62368-1:2014/A11:2017)
- CE mark meets 2014/35/EU directive§
- Meets the voltage and current requirements for ETSI 300-132-2 and complies with and licensed for Basic insulation rating
- 2250 Vdc Isolation tested in compliance with IEEE 802.3¤ PoE standards
- ISO** 9001 and ISO 14001 certified manufacturing facilities

FOOTNOTES

* Trademark of OmniOn Corporation

UL is a registered trademark of Underwriters Laboratories, Inc.

† CSA is a registered trademark of Canadian Standards Association.

‡ VDE is a trademark of Verband Deutscher Elektrotechniker e.V.

§ This product is intended for integration into end-user equipment. All of the required procedures of end-use equipment should be followed.

¤ IEEE and 802 are registered trademarks of the Institute of Electrical and Electronics Engineers, Incorporated.

** ISO is a registered trademark of the International Organization of Standards.

© 2023 OmniOn Power Inc. All rights reserved.

Technical Specifications

Absolute Maximum Ratings

Stresses in excess of the absolute maximum ratings can cause permanent damage to the device. These are absolute stress ratings only, functional operation of the device is not implied at these or any other conditions in excess of those given in the operations sections of the data sheet. Exposure to absolute maximum ratings for extended periods can adversely affect the device reliability.

Parameter	Device	Symbol	Min	Max	Unit
Input Voltage (Continuous) Transient (100ms)	All All	V_{IN} $V_{IN, trans}$	-0.3 -0.3	80 100	V_{dc} V_{dc}
Operating Ambient Temperature (see Thermal Considerations section)	All	T_A	-40	85	°C
Storage Temperature	All	T_{stg}	-55	125	°C
I/O Isolation Voltage (100% factory Hi-Pot tested)	All	-	-	2250	V_{dc}

Electrical Specifications

Unless otherwise indicated, specifications apply at V_{IN} = 48V_{dc}, resistive load, and T_A = 25°C conditions.

Parameter	Device	Symbol	Min	Typ	Max	Unit
Operating Input Voltage	All	V_{IN}	36	48	75	V_{dc}
Input No Load Current (V_{IN} = 48V_{dc} I_O = 0A, module enabled)	All	$I_{IN, NO load}$		40	50	mA
Input Stand-by Current (V_{IN} = 48V_{dc}, module disabled)	All	$I_{IN, stand-by}$		6	8	mA
Maximum Input Current (V_{IN} =36V_{dc}, I_O =$I_{O, max}$)	All	$I_{IN, MAx}$			1.6	A_{dc}
Inrush Transient	All	I^2t			0.05	A^2s
Input Reflected Ripple Current, peak-to-peak (5Hz to 20MHz, 12µH source impedance; V_{IN}=0V to 75V_{dc}, I_O= $I_{o\,max}$; see Test Configuration Section)	All			30		mA_{p-p}
Input Ripple Rejection (120Hz)	All			60		dB
EMC, EN55032		See EMC Considerations section				

CAUTION: This power module is not internally fused. An input line fuse must always be used.

This power module can be used in a wide variety of applications, ranging from simple standalone operation to being part of complex power architecture. To preserve maximum flexibility, internal fusing is not included; however, to achieve maximum safety and system protection, always use an input line fuse. The safety agencies require a fast-acting fuse with a maximum rating of 6A (see Safety Considerations section). Based on the information provided in this data sheet on inrush energy and maximum dc input current, the same type of fuse with a lower rating can be used. Refer to the fuse manufacturer's data sheet for further information.

© 2023 OmniOn Power Inc. All rights reserved.

Technical Specifications (continued)

Electrical Specifications (Continued)

Unless otherwise indicated, specifications apply at V_{IN} = 48V_{dc}, resistive load, and T_A = 25°C conditions.

Parameter	Device	Symbol	Min	Typ	Max	Unit
Output Voltage Set-point (V_{IN}=48V_{dc}, I_O=$I_{O,max}$,)	All	$V_{o,set}$	4.93	5.00	5.07	V_{dc}
Output Voltage (Over all operating input voltage, resistive load, and temperature conditions until end of life)	All	V_O	-3.0	-	+3.0	% $V_{o,set}$
Adjustment Range Selected by external resistor	All	$V_{O,adj}$	-20		+10	% $V_{o,set}$
Remote Sense Range	All				+10	% $V_{o,set}$
Output Regulation Line (V_{IN}=$V_{IN,min}$ to $V_{IN,max}$) Load (I_O=$I_{O,min}$ to $I_{O,max}$) Temperature (T_{ref}=$T_{A,min}$ to $T_{A,max}$)	 All All All		 - - -	 0.05 0.05 -	 0.2 0.2 1.0	 % $V_{o,set}$ % $V_{o,set}$ % $V_{o,set}$
Output Ripple and Noise on nominal output Measured with 10uF Tantalum||1uF ceramic (V_{IN}= 48V_{dc}, I_O=80%$I_{O,max}$, T_A=25°C) RMS (5Hz to 20MHz bandwidth) Peak-to-Peak (5Hz to 20MHz bandwidth)	 All		 - -	 10 60	 25 75	 mV_{rms} mV_{pk-pk}
External Capacitance (see Note 1 in feature Specifications)	All	C_{omax}	0	-	5000	µF
Output Current (V_{IN}=36 to 75V)	All	I_o	0	-	10.0	A_{dc}
Output Current Limit Inception (Hiccup Mode) (V_{IN}=36 to 75V)	All	$I_{o,limt}$	11	-	14	A_{dc}
Output Short-Circuit Current (V_O ≤ 250 mV)	All	$I_{o,s/c}$	-	2.5	-	A_{rms}
Efficiency (V_{IN}= 48V_{dc}, I_O=$I_{O,max}$)	All	η	90.0	91.0	-	%
Switching Frequency (Fixed) V_{IN}= 48V_{dc} , I_O= $I_{O,max}$	All	f_{sw}	-	350	-	kHz
Dynamic Load Response ($\Delta I_O/\Delta t$=0.1A/µs) Load Change from I_O= 50% to 75% or 25% to 50% of $I_{O,max}$: Peak Deviation Settling Time (Vo<10% peak deviation)	 All All	 V_{pk} t_s	 - -	 3.0 400	 - -	 % $V_{o,set}$ µs

Isolation Specifications

Parameter	Symbol	Min	Typ	Max	Unit
Isolation Capacitance	C_{iso}	-	1000	-	pF
Isolation Resistance	R_{iso}	10	-	-	MΩ
I/O Isolation Voltage	All	-	-	2250	V_{dc}

© 2023 OmniOn Power Inc. All rights reserved.

Technical Specifications (continued)

General Specifications

Parameter		Min	Typ	Max	Unit
Calculated Reliability based upon Telcordia SR-332 Issue 2: Method I Case 3 (I_O=80%$I_{O,max}$, T_A=40°C, airflow = 200 lfm, 90% confidence)	FIT		272.0		10^9/Hours
	MTBF		3,677,136		Hours
Weight		-	13 (0.46)	-	g (oz.)

Feature Specifications

Unless otherwise indicated, specifications apply at V_{IN} = 48V_{dc}, resistive load, and T_A = 25°C conditions. See Feature Descriptions for additional information.

Note: 1. The module requires a minimum of 680 µF external output capacitor to avoid exceeding the OVP maximum limits during startup into open loop fault conditions.

Parameter	Device	Symbol	Min	Typ	Max	Unit
Remote On/Off Signal Interface (V_{IN}=$V_{IN,min}$ to $V_{IN,max}$; open collector or equivalent, Signal referenced to V_{IN-} terminal)						
Negative Logic: device code suffix "1"						
Logic Low = module On, Logic High = module Off						
Positive Logic: No device code suffix required						
Logic Low = module Off, Logic High = module On						
Logic Low - Remote On/Off Current ($V_{on/off}$ = -0.7V_{dc})	All	$I_{on/off}$	-	-	0.15	mA
Logic Low - On/Off Voltage	All	$V_{on/off}$	-0.7	-	0.8	V_{dc}
Logic High Voltage ($I_{on/off}$ = 0A_{dc})	All	$V_{on/off}$	2.4	-	7	V_{dc}
Logic High maximum allowable leakage current	All	$I_{on/off}$	-	-	25	µA
Turn-On Delay and Rise Times (I_O=80% of $I_{O,max}$)						
Case 1: Input power is applied for at least 1second, and then the On/Off input is set from OFF to ON (T_{delay} = on/off pin transition until V_O = 10% of $V_{O,set}$)	All	$T_{delay\ Case1}$	-	25	50	ms
Case 2: On/Off input is set to Module ON, and then input power is applied (T_{delay} = V_{IN} reaches $V_{IN,min}$ until V_O = 10% of $V_{O,set}$)	All	$T_{delay\ Case2}$	-	35	50	ms
Output voltage Rise time (time for Vo to rise from 10% of $V_{O,set}$ to 90% of $V_{O,set}$)	All	T_{rise}	-	5	10	ms
Output Voltage Overshoot (I_O=80% of $I_{O,max}$, V_{IN}= 48V_{dc},)					3	% $V_{O,set}$
Output Overvoltage Protection	All	$V_{O,limit}$	6.0	-	7.0	V_{dc}
Input Undervoltage Lockout						
Turn-on Threshold	All	$V_{uv/on}$	-	34	36	V_{dc}
Turn-off Threshold	All	$V_{uv/off}$	30	32	-	V_{dc}
Hysteresis	All	V_{hyst}	-	2.0	-	V_{dc}

© 2023 OmniOn Power Inc. All rights reserved.

Technical Specifications (continued)

Characteristic Curves

The following figures provide typical characteristics for the KSTW010A0A (5.0V, 10A) at 25°C. The figures are identical for either positive or negative remote On/Off logic.

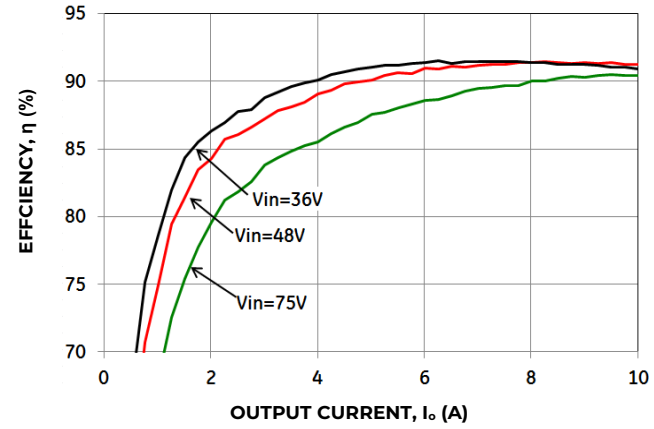

Figure 1. Converter Efficiency versus Output Current.

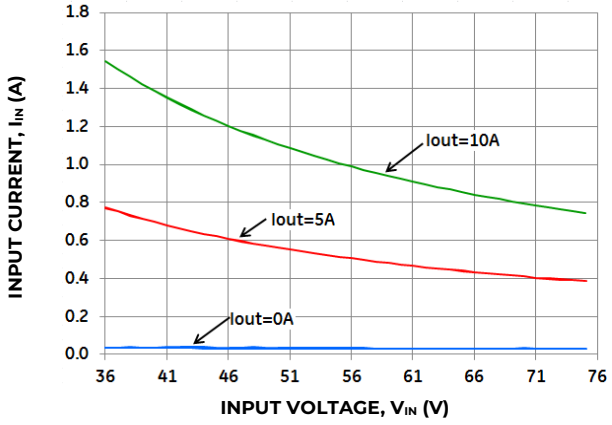

Figure 2. Converter Input Current versus Input Voltage.

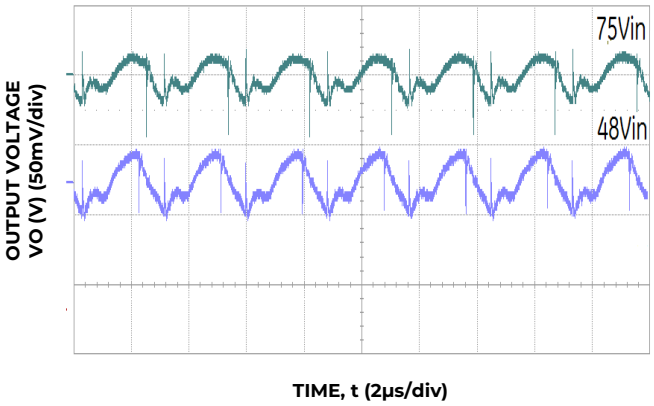

Figure 3. Typical output ripple and noise ($I_O = I_{O,max.}$)

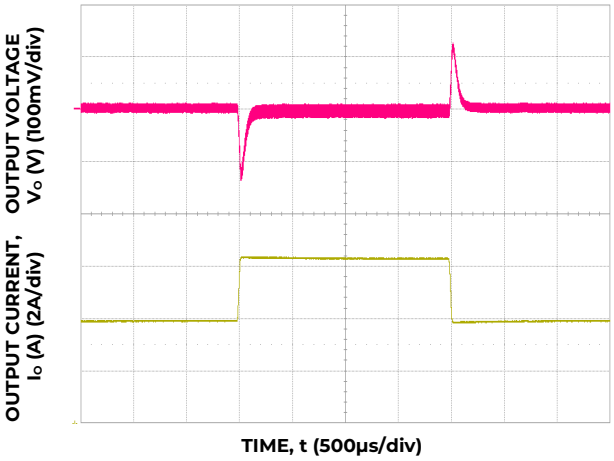

Figure 4. Transient Response to 0.1A/µS Dynamic Load Change from 50% to 75% to 50% of full load, Vin=48V.

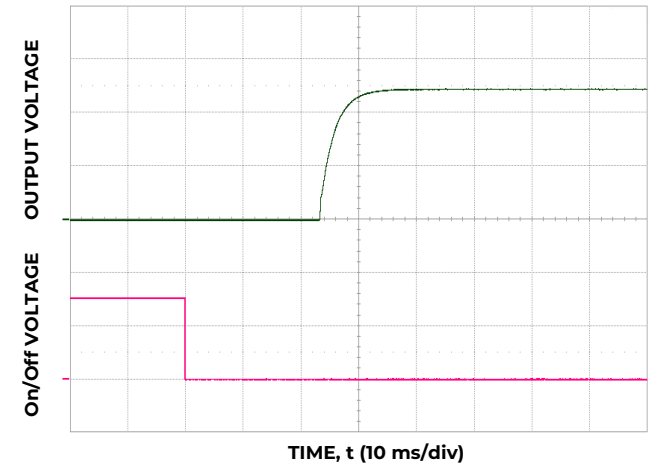

Figure 5.Typical Start-up Using Remote On/Off, negative logic version shown (V_{IN} = 48V, $I_o = I_{o,max}$).

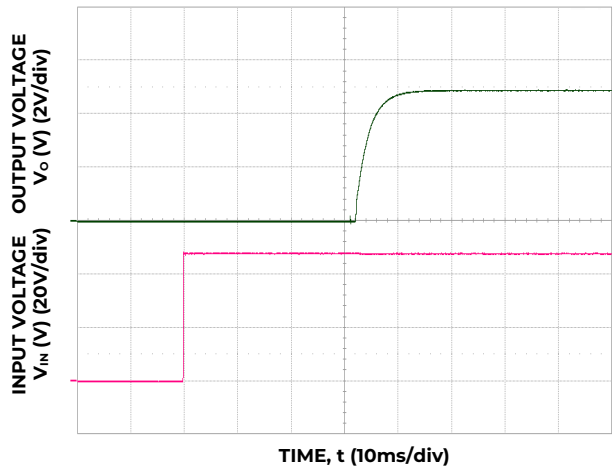

Figure 6. Typical Start-up Using Input Voltage (V_{IN} = 48V, $I_o = I_{o,max}$).

© 2023 OmniOn Power Inc. All rights reserved.

Technical Specifications (continued)

Test Configurations

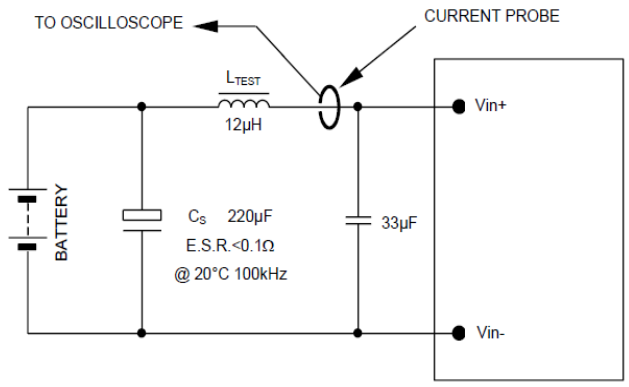

Figure 7. Input Reflected Ripple Current Test Setup.

NOTE: Measure input reflected ripple current with a simulated source inductance (L_{TEST}) of 12µH. Capacitor C_S offsets possible battery impedance. Measure current as shown above.

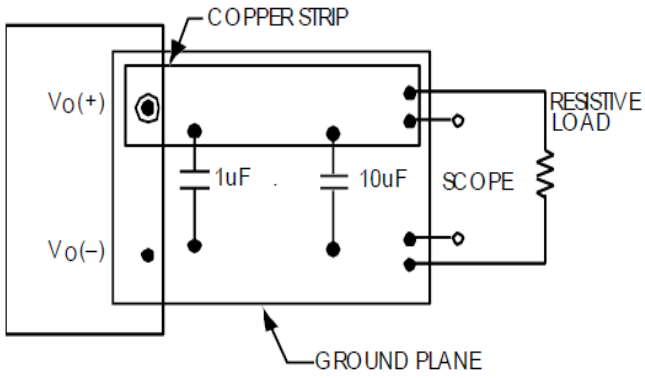

Figure 8. Output Ripple and Noise Test Setup.

NOTE: All voltage measurements to be taken at the module terminals, as shown above. If sockets are used then Kelvin connections are required at the module terminals to avoid measurement errors due to socket contact resistance.

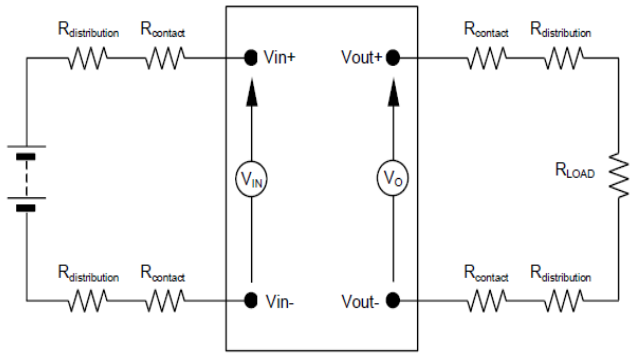

Figure 9. Output Voltage and Efficiency Test Setup.

NOTE: All voltage measurements to be taken at the module terminals, as shown above. If sockets are used then Kelvin connections are required at the module terminals to avoid measurement errors due to socket contact resistance.

$$\text{Efficiency } \eta = \frac{V_o . I_o}{V_{in} . I_{in}} \text{ X } 100\ \%$$

Design Considerations

Input Source Impedance

The power module should be connected to a low ac-impedance source. Highly inductive source impedance can affect the stability of the power module. For the test configuration in Figure 7, a 33µF electrolytic capacitor (ESR<0.7Ω at 100kHz), mounted close to the power module helps ensure the stability of the unit. Consult the factory for further application guidelines.

Safety Considerations

For safety agency approval the power module must be installed in compliance with the spacing and separation requirements of the end-use safety agency standards, i.e., UL ANSI/UL* 62368-1 and CAN/CSA+ C22.2 No. 62368-1 Recognized, DIN VDE 0868- 1/ A11:2017 (EN62368-1:2014/A11:2017).

If the input source is non-SELV (ELV or a hazardous voltage greater than 60 Vdc and less than or equal to 75V_{dc}), for the module's output to be considered as meeting the requirements for safety extra-low voltage (SELV) or ES1, all of the following must be true:

- The input source is to be provided with reinforced insulation from any other hazardous voltages, including the ac mains.
- One V_{IN} pin and one V_{OUT} pin are to be grounded, or both the input and output pins are to be kept floating.
- The input pins of the module are not operator accessible.
- Another SELV or ES1 reliability test is conducted on the whole system (combination of supply source and subject module), as required by the safety agencies, to verify that under a single fault, hazardous voltages do not appear at the module's output.

© 2023 OmniOn Power Inc. All rights reserved.

Technical Specifications (continued)

Safety Considerations (Continued)

Note: Do not ground either of the input pins of the module without grounding one of the output pins. This may allow a non-SELV/ES1 voltage to appear between the output pins and ground.

The power module has safety extra-low voltage (SELV) or ES1 outputs when all inputs are SELV or ES1.

For input voltages exceeding -60 V_{dc} but less than or equal to -75V_{dc}, these converters have been evaluated to the applicable requirements of BASIC INSULATION between secondary DC MAINS DISTRIBUTION input (classified as TNV-2 in Europe) and unearthed SELV outputs.

The input to these units is to be provided with a maximum 6A time-delay fuse in the ungrounded lead.

Feature Descriptions

Remote On/Off

Two remote on/off options are available. Positive logic remote on/off turns the module on during a logic-high voltage on the ON/OFF pin, and off during a logic low.

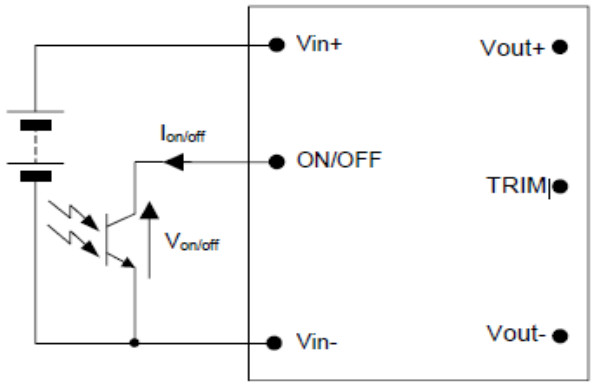

Figure 10. Circuit configuration for using Remote On/Off Implementation.

To turn the power module on and off, the user must supply a switch (open collector or equivalent) to control the voltage ($V_{on/off}$) between the ON/OFF terminal and the V_{IN}(-) terminal. Logic low is $0V \le V_{on/off} \le 0.8V$. The maximum $I_{on/off}$ during a logic low is 0.15mA, the switch should be maintain a logic low level whilst sinking this current.

During a logic high, the typical $V_{on/off}$ generated by the module is 4.0V, and the maximum allowable leakage current at $V_{on/off}$ = 4.0V is 25µA.

If not using the remote on/off feature:

For positive logic: leave ON/OFF pin open.

For negative logic, short ON/OFF pin to V_{IN}(-).

Overcurrent Protection

To provide protection in a fault (output overload) condition, the unit is equipped with internal current-limiting circuitry and can endure current limiting continuously. At the point of current-limit inception, the unit enters hiccup mode. If the unit is not configured with auto–restart, then it will latch off following the over current condition. The module can be restarted by cycling the dc input power or by toggling the remote on/off signal. If the unit is configured with the auto-restart option (4), it will remain in the hiccup mode as long as the overcurrent condition exists; it operates normally, once the output current is brought back into its specified range.

Overtemperature Protection

To provide protection under certain fault conditions, the unit is equipped with a thermal shutdown circuit. The unit will shut down if the thermal reference point T_{ref} (Figure 16), exceeds 135°C (typical), but the thermal shutdown is not intended as a guarantee that the unit will survive temperatures beyond its rating. The module will automatically restart upon cool-down to a safe temperature.

Input Undervoltage Lockout

At input voltages below the input undervoltage lockout limit, the module operation is disabled. The module will only begin to operate once the input voltage is raised above the undervoltage lockout turn-on threshold, $V_{UV/OFF}$.

Once operating, the module will continue to operate until the input voltage is taken below the undervoltage turn-off threshold, $V_{UV/On}$.

© 2023 OmniOn Power Inc. All rights reserved.

Technical Specifications (continued)

Feature Descriptions (continued)

Over Voltage Protection

The output overvoltage protection shall consist of circuitry that independently monitors the output voltage, and shuts the module down if the output voltage exceeds specified limits. This protection feature latches in the event of over voltage across the output. Cycling the on/off pin or input voltage resets the latching protection feature. If the auto-restart option (4) is ordered, the module will automatically restart upon an internally programmed time elapsing.

Output Voltage Programming

Trimming allows the user to increase or decrease the output voltage set point of the module. This is accomplished by connecting an external resistor between the TRIM pin and either the V_{out}+ pin or the V_{out}- pin.

Trim Down – Decrease Output Voltage

By connecting an external resistor ($R_{adj\text{-}down}$) between the TRIM pin and V_O(-) or SENSE(-) pin (see figure 11), the output voltage set point decreases. The following equation determines the external resistor value to obtain an output voltage change from $V_{o,\,set}$ to the desired $V_{o,\,desired}$:

$$R_{adj\text{-}down} = \left[\frac{511}{\Delta\,\%} - 10.22 \right] \text{ KΩ}$$

$$\text{Where } \Delta\% = \left| \frac{V_{o,\,set} - V_{o,\,desired}}{V_{o,\,set}} \right| \text{ X 100}$$

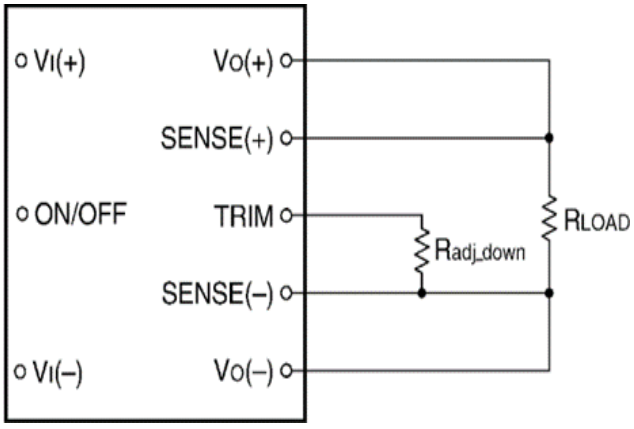

Figure 11. Circuit Configuration to Decrease Output Voltage.

Trim Up – Increase Output Voltage

By connecting an external resistor ($R_{adj\text{-}up}$) between the TRIM pin and V_O(+) or SENSE(+) pin (see figure 12), the output voltage set point increases. The following equation determines the external resistor value to obtain an output voltage change from $V_{o,\,set}$ to the desired $V_{o,\,desired}$:

$$R_{adj\text{-}up} = \left[\frac{5.11 \times V_{o,\,set} \times (100+\Delta\%)}{1.225 \times \Delta\%} - \frac{511}{\Delta\%} - 10.22 \right] \text{ KΩ}$$

$$\Delta\% = \left| \frac{V_{o,\,desired} - V_{o,\,set}}{V_{o,\,set}} \right| \text{ x100}$$

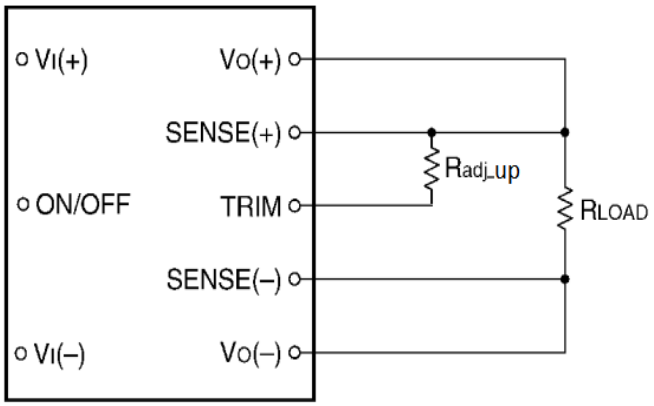

Figure 12. Circuit Configuration to Increase Output Voltage.

The combination of the output voltage adjustment and the output voltage initial tolerance must not exceed the allowable trim range of 80% to 110% of the nominal output voltage as measured between the V_{out}+ and V_{out}- pins.

The KSTW010A0A power modules have a fixed current -limit set point. Therefore, as the output voltage is adjusted down, the available output power is reduced.

Pre-bias Vin Under Voltage Test

The module shall recover from UVLO [Under Voltage Lock Out] without protective shutdown from OCP or OVP or hard failure, when subjected to Vin Under Voltage transients with the following conditions:

© 2023 OmniOn Power Inc. All rights reserved.

Technical Specifications (continued)

Vin (V)	Tdip (ms)	Co (uF)	Load (A)
48	5	0	0
48	5	2200	0
48	10	0	0
48	10	2200	0
48	5	0	10
48	5	2200	10
48	10	0	10
48	10	2200	10
60	5	0	0
60	5	2200	0
60	10	0	0
60	10	2200	0
60	5	0	10
60	5	2200	10
60	10	0	10
60	10	2200	10

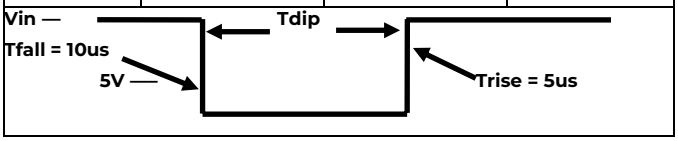

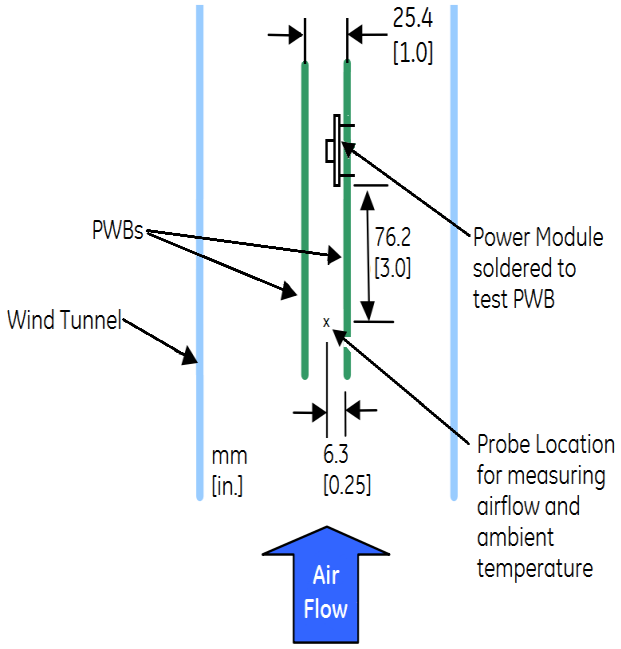

Figure 13. Thermal Test Setup.

Thermal Considerations

The power modules operate in a variety of thermal environments; however, sufficient cooling should be provided to help ensure reliable operation.

Considerations include ambient temperature, airflow, module power dissipation, and the need for increased reliability. A reduction in the operating temperature of the module will result in an increase in reliability.

The thermal data presented here is based on physical measurements taken in a wind tunnel, using automated thermocouple instrumentation to monitor key component temperatures: FETs, diodes, control ICs, magnetic cores, ceramic capacitors, opto-isolators, and module pwb conductors, while controlling the ambient airflow rate and temperature. For a given airflow and ambient temperature, the module output power is increased, until one (or more) of the components reaches its maximum derated operating temperature, as defined in IPC- 9592A. This procedure is then repeated for a different airflow or ambient temperature until a family of module output derating curves is obtained.

Heat Transfer via Convection

Increased airflow over the module enhances the heat transfer via convection. Derating figures showing the maximum output current that can be delivered by each module versus local ambient temperature (T_A) for natural convection and up to 3m/s (600 ft./min) are shown in the respective Characteristics Curves section.

Please refer to the Application Note “Thermal Characterization Process For Open-Frame Board-Mounted Power Modules” for a detailed discussion of thermal aspects including maximum device temperatures.

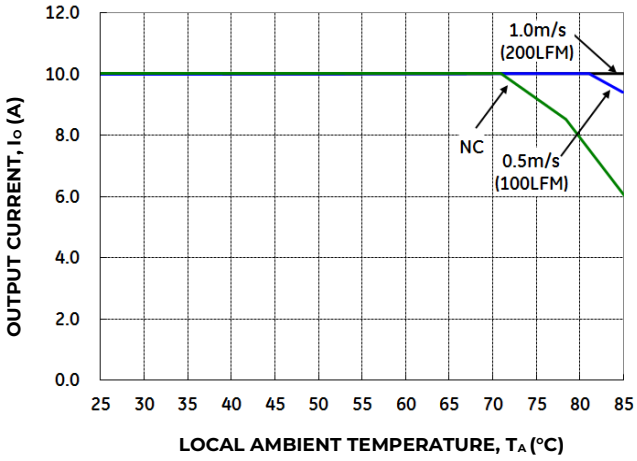

Figure 14. Output Current Derating for the Open Frame KSTW010A0A in the Transverse Orientation; Airflow Direction from Vin(+) to Vin(-); Vin = 48V.

© 2023 OmniOn Power Inc. All rights reserved.

Technical Specifications (continued)

Thermal Considerations (continued)

The thermal reference point, T_{ref}, used in the specifications is shown in Figure 15. For reliable operation this temperature should not exceed 122°C.

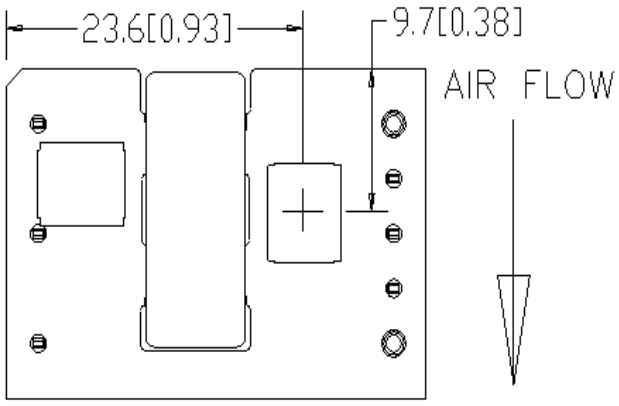

Figure 15. T_{ref} Temperature Measurement Location.

EMC Requirements

Figure 16 shows a maximum filter configuration to meet the conducted emission limits of EN55032 Class B.

Notes: C1 and C4 are low impedance SMT ceramics.

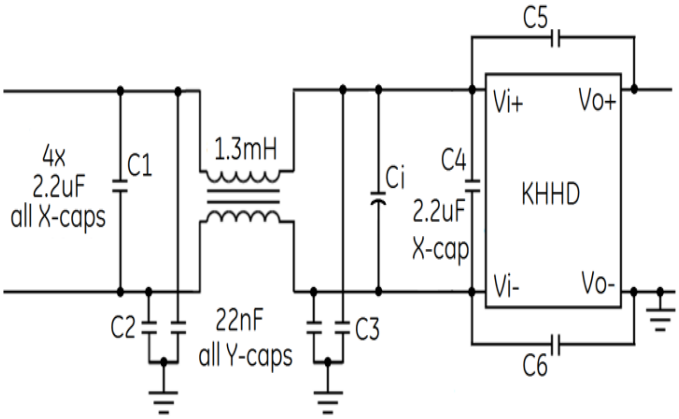

Figure 16. Suggested Configuration for EN55032 Class B.

Ci See Figure 7

C1, C4 2.2uF, 100V, 1210

C2, C3 1210Y1K50103KXTDWV, 10nF, 1500V (*2)
RDHX223K302HKT, 22nF, 3000V (Holystone)

C5, C6 GRM32DR73A153KW01L, 15nF, 1000V (*2)
RDHX333K302HKT, 33nF, 3000V (Holystone)
202S48W334KT, 33nF, 2000V (Johanson)

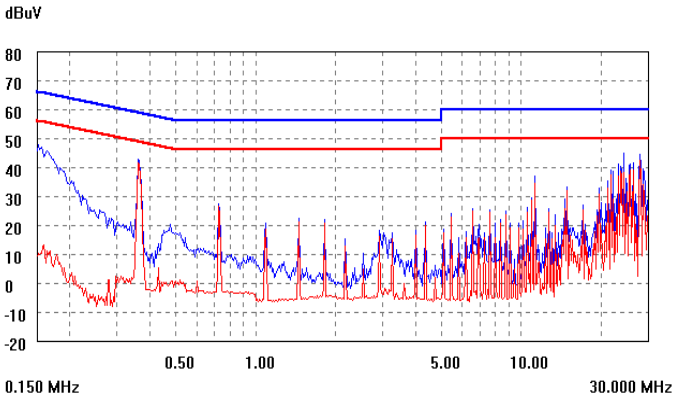

Figure 17. EMC signature using above filter, KSTW010A0A.

For further information on designing for EMC compliance, please refer to the FLTR100V10 data sheet (FDS01-043EPS).

Layout Considerations

The KSTW010A0A power module series are low profile in order to be used in fine pitch system card architectures. As such, component clearance between the bottom of the power module and the mounting board is limited. Avoid placing copper areas on the outer layer directly underneath the power module. Also avoid placing via interconnects underneath the power module.

For additional layout guide-lines, refer to the FLTR100V10 data sheet.

The KSTW010A0A family of power modules is available for either Through-Hole (TH) or Surface Mount (SMT) soldering.

Through-Hole Soldering Information

The RoHS-compliant (Z-codes) through-hole products use the SAC (Sn/Ag/Cu) Pb-free solder and RoHS-compliant components. They are designed to be processed through single or dual wave soldering machines. The pins have an RoHS-compliant finish that is compatible with both Pb and Pb-free wave soldering processes. A maximum preheat rate of 3°C/s is suggested. The wave preheat process should be such that the temperature of the power module board is kept below 210°C. For Pb solder, the recommended pot temperature is 260°C, while the Pb -free solder pot is 270°C max. Not all RoHS-compliant through-hole products can be

© 2023 OmniOn Power Inc. All rights reserved.

Layout Considerations (continued)

processed with paste-through-hole Pb or Pb-free reflow process. If additional information is needed, please consult with your OmniOn representative for more details.

Surface Mount Information

Pick and Place

The KSTW-SR series of DC-to-DC power converters use an open-frame construction and are designed for surface mount assembly within a fully automated manufacturing process.

The KSTW-SR series modules are designed to use the main magnetic component surface to allow for pick and place.

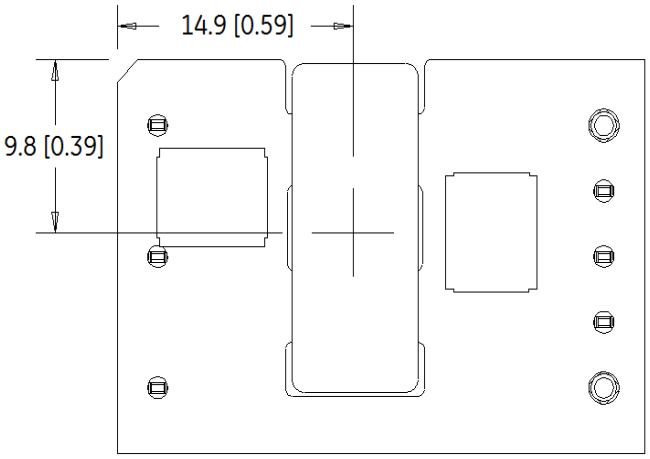

Figure 18. Pick and Place Location.

Note: All dimensions in mm [in].

Z Plane Height

The 'Z' plane height of the pick and place location is 7.50mm nominal with an RSS tolerance of +/-0.25 mm.

Nozzle Recommendations

The module weight has been kept to a minimum by using open frame construction. Even so, they have a relatively large mass when compared with conventional SMT components. Variables such as nozzle size, tip style, vacuum pressure and placement speed should be considered to optimize this process.

The minimum recommended nozzle diameter for reliable operation is 5mm. The maximum nozzle outer diameter, which will safely fit within the allowable component spacing, is 6.5mm.

Oblong or oval nozzles up to 11 x 6 mm may also be used within the space available.

For further information please contact your local OmniOn Technical Sales Representative.

Reflow Soldering Information

These power modules are large mass, low thermal resistance devices and typically heat up slower than other SMT components. It is recommended that the customer review data sheets in order to customize the solder reflow profile for each application board assembly.

The following instructions must be observed when SMT soldering these units. Failure to observe these instructions may result in the failure of or cause damage to the modules, and can adversely affect long -term reliability.

There are several types of SMT reflow technologies currently used in the industry. These surface mount power modules can be reliably soldered using natural forced convection, IR (radiant infrared), or a combination of convection/IR. The recommended linear reflow profile using Sn/Pb solder is shown in Figure 19 and 20. For reliable soldering the solder reflow profile should be established by accurately measuring the module's pin connector temperatures.

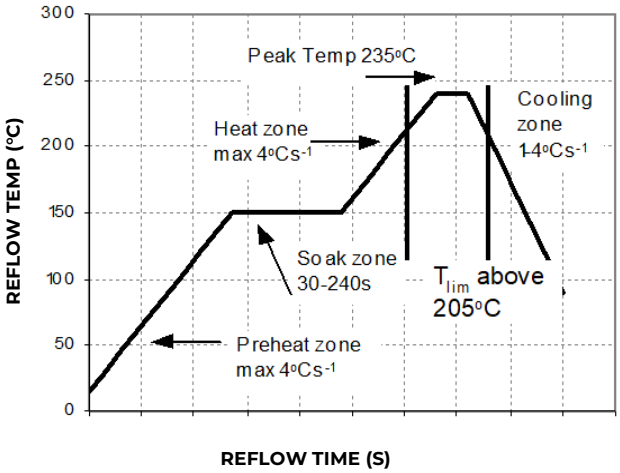

Figure 19. Recommended Reflow Profile for Sn/Pb solder.

© 2023 OmniOn Power Inc. All rights reserved.

Surface Mount Information (continued)

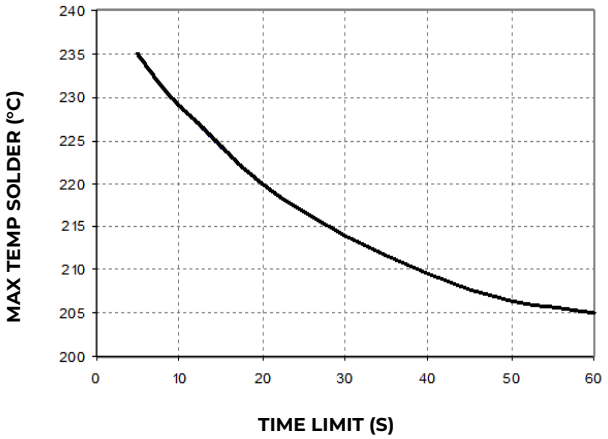

Figure 20. Time Limit, T_{lim}, Curve Above 205°C Reflow.

Lead Free Soldering

The –Z version SMT modules of the KSTW010A0A series are lead-free (Pb-free) and RoHS compliant and are compatible in a Pb-free soldering process. Failure to observe the instructions below may result in the failure of or cause damage to the modules and can adversely affect long-term reliability.

Pb-free Reflow Profile

Power Systems will comply with J-STD-020 Rev. D (Moisture/Reflow Sensitivity Classification for Nonhermetic Solid State Surface Mount Devices) for both Pb-free solder profiles and MSL classification procedures. This standard provides a recommended forced-air-convection reflow profile based on the volume and thickness of the package (table 4-2). The suggested Pb-free solder paste is Sn/Ag/Cu (SAC). The recommended linear reflow profile using Sn/Ag/Cu solder is shown in Figure 21.

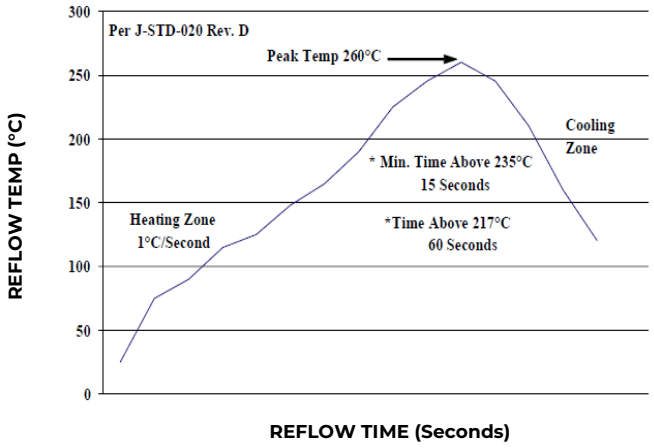

Figure 21. Recommended linear reflow profile using Sn/Ag/Cu solder

MSL Rating

The KSTW010A0A series SMT modules have a MSL rating of 2a.

Storage and Handling

The recommended storage environment and handling procedures for moisture-sensitive surface mount packages is detailed in J-STD-033 Rev. A (Handling, Packing, Shipping and Use of Moisture/Reflow Sensitive Surface Mount Devices). Moisture barrier bags (MBB) with desiccant are required for MSL ratings of 2 or greater. These sealed packages should not be broken until time of use. Once the original package is broken, the floor life of the product at conditions ≤30°C and 60% relative humidity varies according to the MSL rating (see J-STD-033A). The shelf life for dry packed SMT packages will be a minimum of 12 months from the bag seal date, when stored at the following conditions: < 40° C, < 90% relative humidity.

Post Solder Cleaning and Drying Considerations

Post solder cleaning is usually the final circuit board assembly process prior to electrical board testing. The result of inadequate cleaning and drying can affect both the reliability of a power module and the testability of the finished circuit board assembly. For guidance on appropriate soldering, cleaning and drying procedures, refer to OmniOn Board Mounted Power Modules: Soldering and Cleaning Application Note (AP01-056EPS).

© 2023 OmniOn Power Inc. All rights reserved.

Technical Specifications (continued)

Mechanical Outline for KSTW010A0A Surface-Mount Module

Dimensions are in millimeters and (inches).

Tolerances: x.x mm ±0.5 mm (x.xx in±0.02 in.) [Unless otherwise indicated]

x.xx mm ± 0.25 mm (x.xxx in ± 0.010 in.)

Top View

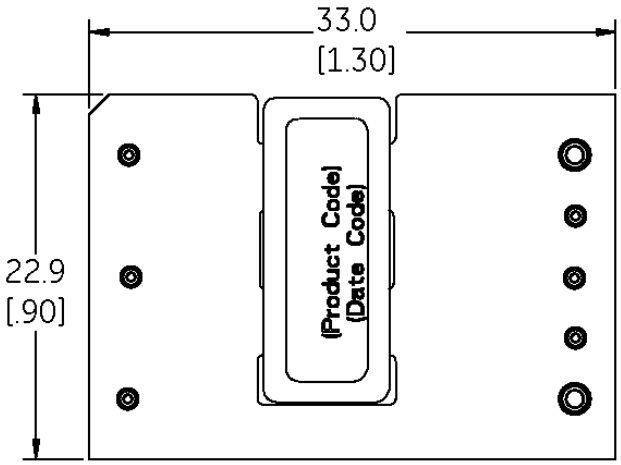

Side View

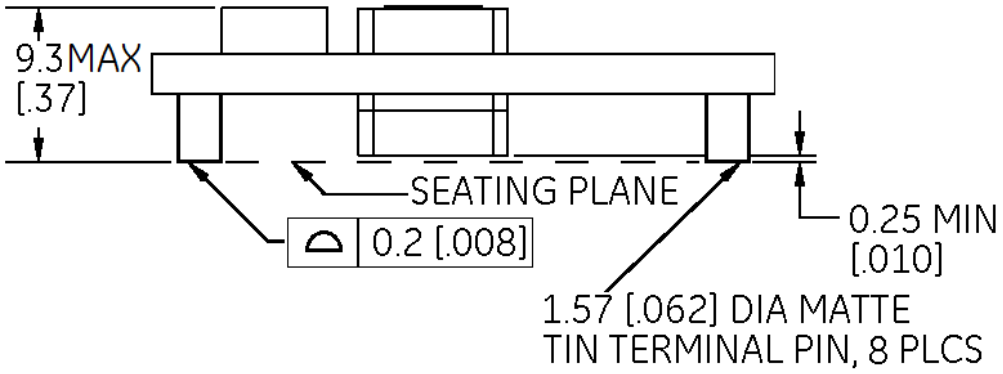

Bottom View

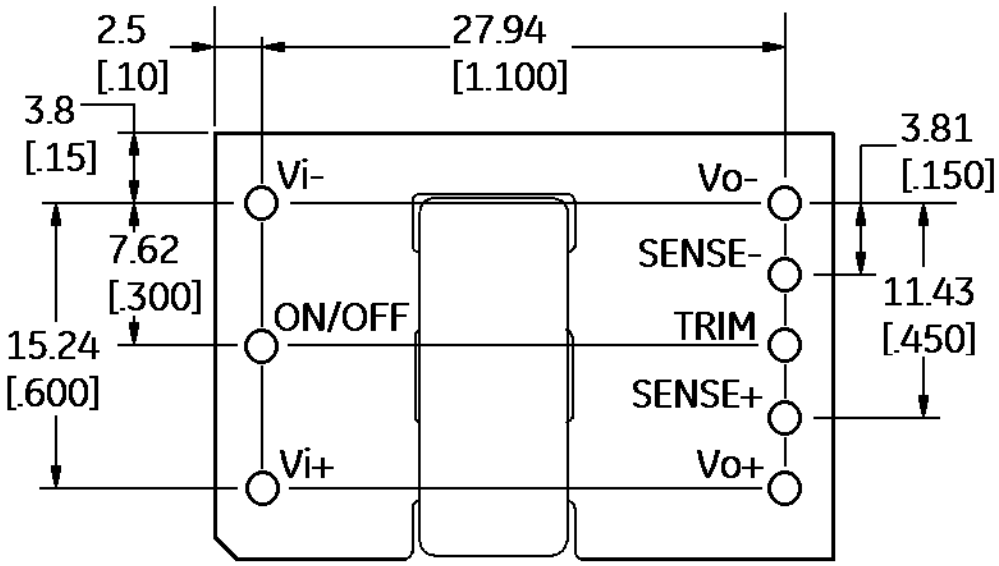

PIN	FUNCTION
1	V_{IN} (+)
2	On/Off
3	V_{IN} (-)
4	V_o (-)
5	Sense (-)
6	Trim
7	Sense (+)
8	V_o (+)

© 2023 OmniOn Power Inc. All rights reserved.

Technical Specifications (continued)

Mechanical Outline for KSTW010A0A Through Hole Module

Dimensions are in millimeters and (inches).

Tolerances: x.x mm ±0.5 mm (x.xx in±0.02 in.) [Unless otherwise indicated]

x.xx mm ± 0.25 mm (x.xxx in ± 0.010 in.)

Top View

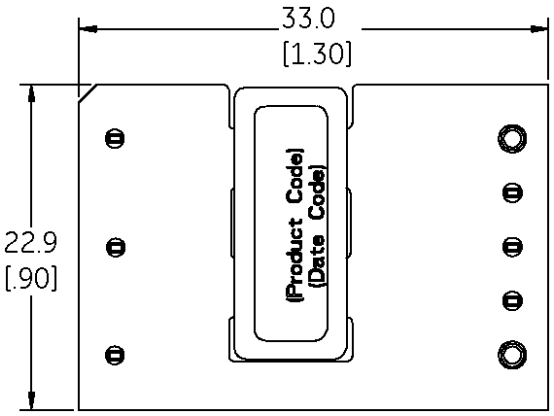

Side View

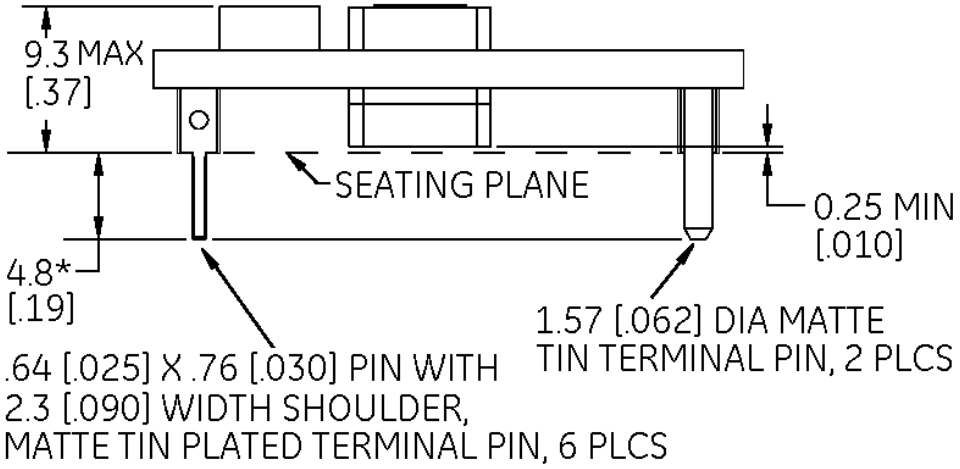

* Optional PIN Lengths shown In Device Option Table

Bottom View

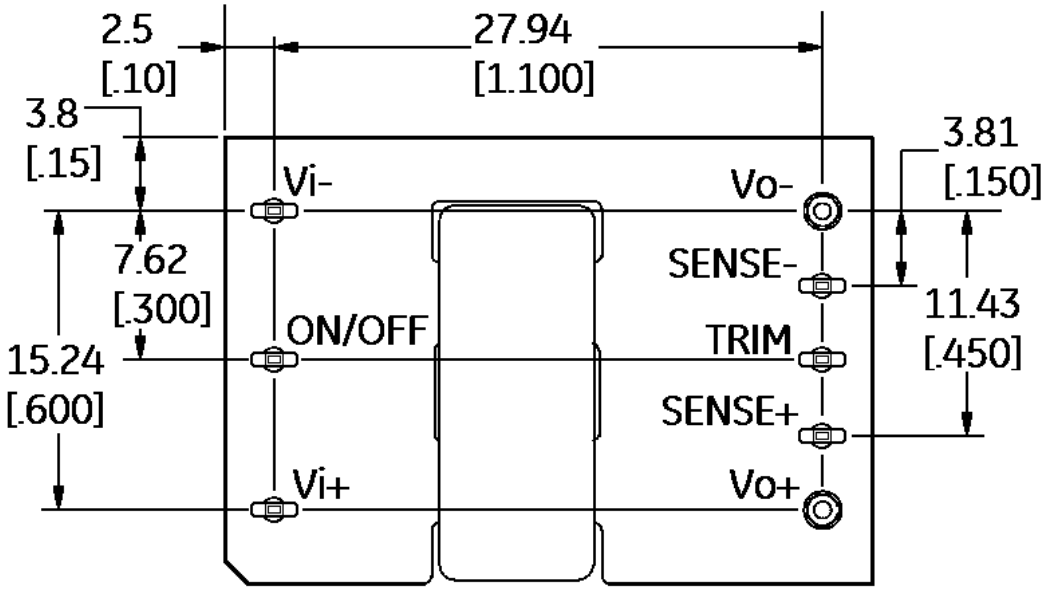

PIN	FUNCTION
1	V_{IN} (+)
2	On/Off
3	V_{IN} (-)
4	V_o (-)
5	Sense (-)
6	Trim
7	Sense (+)
8	V_o (+)

© 2023 OmniOn Power Inc. All rights reserved.

Technical Specifications (continued)

Recommended Pad Layout for Surface Mount and Through Hole Module

Dimensions are in millimeters and (inches).

Tolerances: x.x mm ±0.5 mm (x.xx in±0.02 in.) [Unless otherwise indicated]

x.xx mm ± 0.25 mm (x.xxx in ± 0.010 in.)

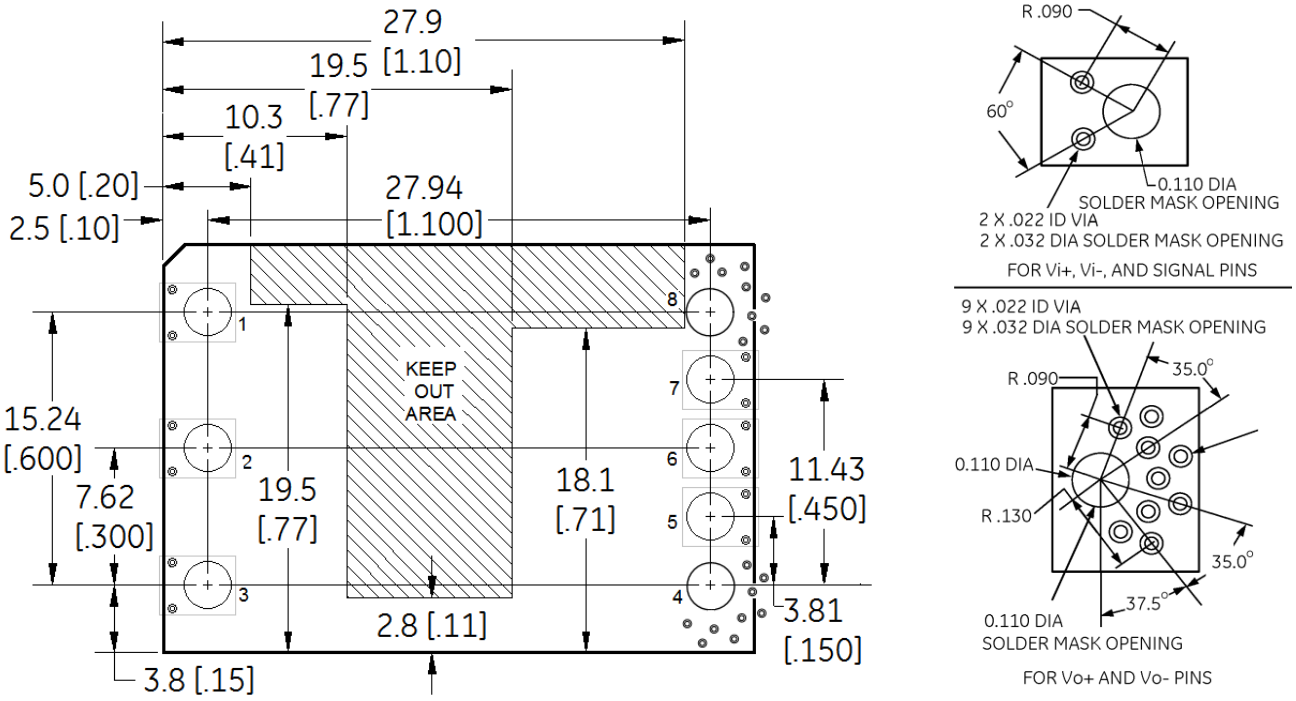

Surface Mount Pad Layout

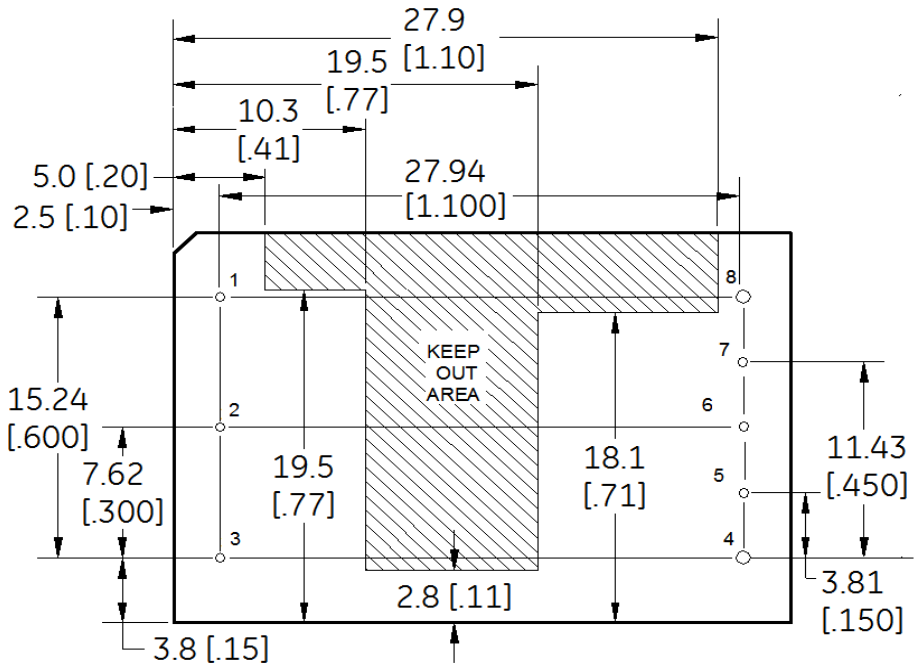

Through-Hole Pad Layout

For .025 x .030 rectangular pin, use a .050 diameter plated through hole

For .062 diameter pin, use a .076 diameter plated through hole.

© 2023 OmniOn Power Inc. All rights reserved.

Technical Specifications (continued)

Packaging Details

The KSTW010A0A series SMT versions are supplied in tape & reel as standard. Details of tape dimensions are shown below. Modules are shipped in quantities of 140 modules per reel.

Tape Dimensions

Dimensions are in millimeters

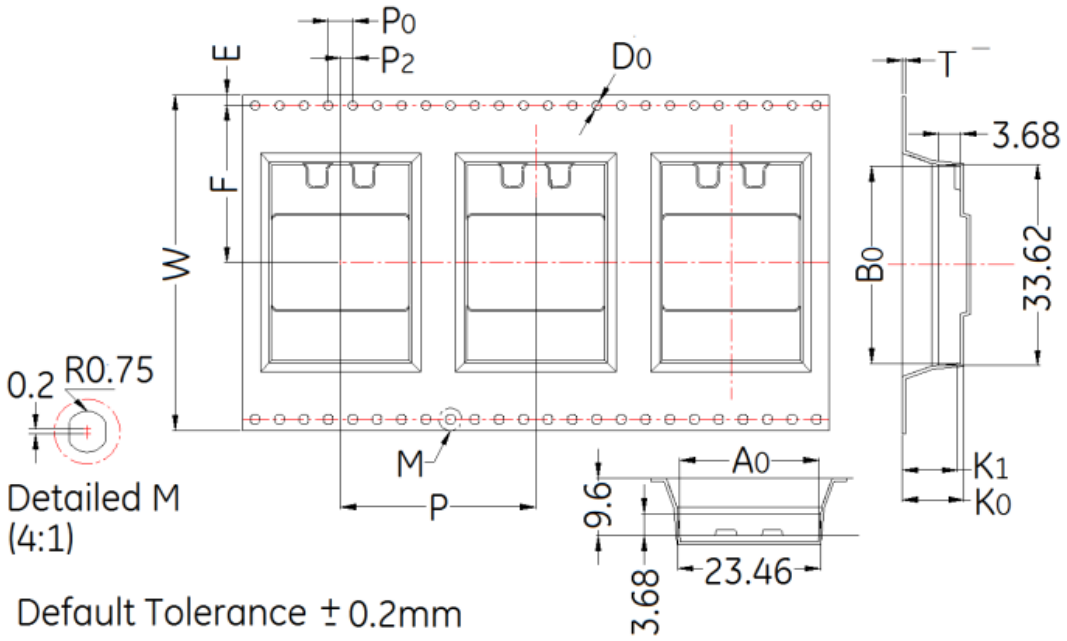

ITEM	W	A_0	B_0	K_0	K_1	P	F	E	D_0	P_0	P_2	T
DIM	56.0	22.82	32.98	10.6	9.6	32.0	26.2	1.75	1.50	4.00	2.00	0.5
TOL+/-	0.30	0.15	0.15	0.15	0.1	0.15	0.15	0.1	0.1	0.1	0.15	0.045

Reel Dimensions

Outside Diameter: 330mm
Inside Diameter: 178mm
Tape Width: 56mm

© 2023 OmniOn Power Inc. All rights reserved.

Technical Specifications (continued)

Tray Dimensions

The KSTW010A0A - series Through Hole versions are supplied in trays as standard. Details of tray dimensions are shown below. Modules are shipped in quantities of 75 modules per box.

Dimensions are in millimeters.

Tolerances: x.x mm ± 0.5 mm (unless otherwise indicated)

x.xx mm ± 0.25 mm

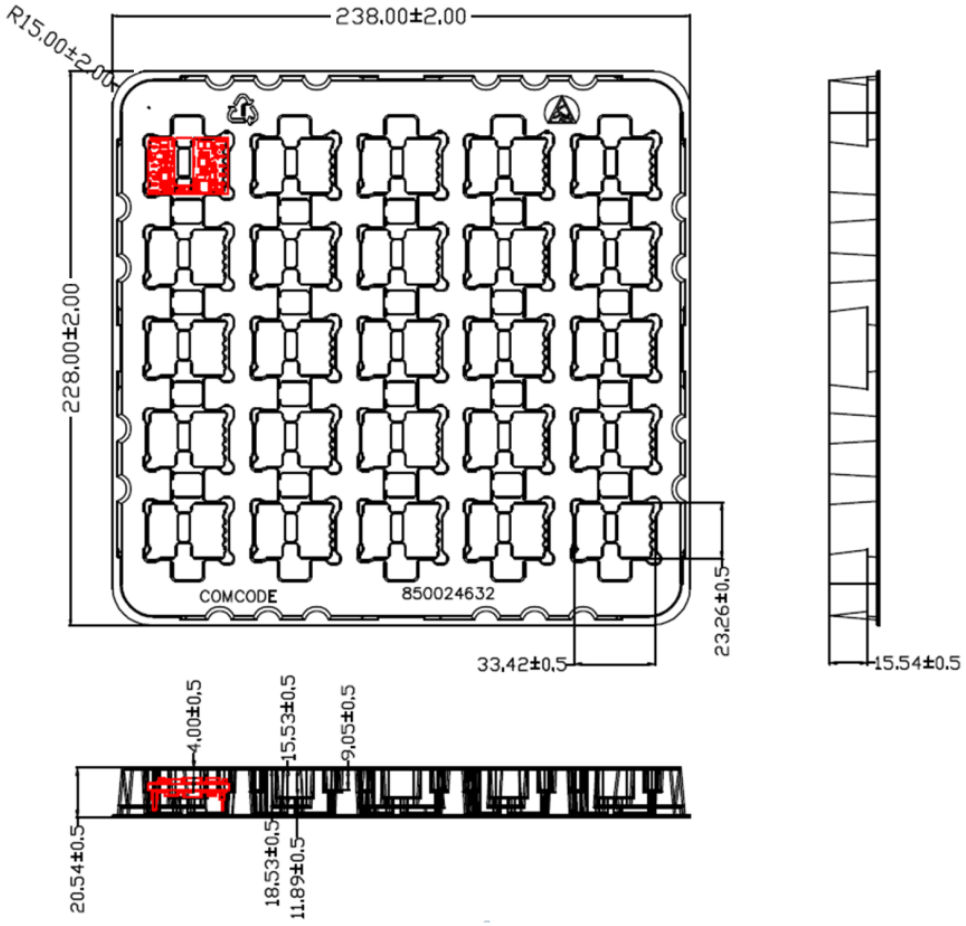

Material	PET (1mm)
Max surface resistivity	10^{9} -10^{11} W/PET
Color	Clear
Capacity	25 power modules
Min order quantity	75 pcs (1 box of 3 full trays + 1 empty top tray)

© 2023 OmniOn Power Inc. All rights reserved.

Technical Specifications (continued)

Ordering Information

Please contact your OmniOn Sales Representative for pricing, availability and optional features.

Product codes	Input Voltage	Output Current	Output Voltage	Remote On/Off Logic	Connector Type	Ordering Codes
KSTW010A0A41Z	48V (36-75V_{dc})	10A (36-75V_{IN})	5.0V	Negative	Through hole	150030477
KSTW010A0A1-21Z	48V (36-75V_{dc})	10A (36-75V_{IN})	5.0V	Negative	Through hole	150037122
KSTW010A0A41-SRZ	48V (36-75V_{dc})	10A (36-75V_{IN})	5.0V	Negative	Surface mount	150030476

Table 1 Device Codes

	Characteristic	Character and Position											Definition
Ratings	Form Factor	K											K = 1/16th Brick
	Family Designator		ST										ST = Low Power Barracuda Series
	Input Voltage		W										W = Wide Range, 36V-75V
	Output Current				010A0								010A0 = 0.0 Amps Maximum Output Current
	Output Voltage					A							A=5.0V Nominal
Options	Pin Length						6 8						Omit = Default Pin Length shown in Mechanical Outline Figures 6 = Pin Length: 3.68 mm ± 0.25mm , (0.145 in. ± 0.010 in.) 8 = Pin Length: 2.79 mm ± 0.25mm , (0.110 in. ± 0.010 in.)
	Action following Protective Shutdown							4					Omit = Latching Logic 4 = Auto-restart following shutdown (Overcurrent/ Overvoltage)
	On/Off Logic								1				Omit = Positive Logic 1 = Negative Logic
										-			
	Customer Specific									XY 21			XY= Customer Specific Modified Code, Omit for Standard Code 21 = Meets 100us Vin dropout test with minimal external Cin
	Mechanical Features										SR		Omit = Standard open Frame Module S = Surface Mount connections: R = Tape & Reel Packaging
	RoHS											Z	Omit = RoHS 5/6, Lead Based Solder Used Z = RoHS Compliant

Table 2. Device Options

© 2023 OmniOn Power Inc. All rights reserved.

Change History (excludes grammar & clarifications)

Revision	Date	Description of the change
1.4	04/19/2022	Updated as per template , ROHS
1.5	11/30/2023	Updated as per OmniOn template

© 2023 OmniOn Power Inc. All rights reserved.

OmniOn Power Inc.
601 Shiloh Rd.
Plano, TX USA

omnionpower.com

We reserve the right to make technical changes or modify the contents of this document without prior notice. OmniOn Power does not accept any responsibility for errors or lack of information in this document and makes no warranty with respect to and assumes no liability as a result of any use of information in this document.

We reserve all rights in this document and in the subject matter and illustrations contained therein. Any reproduction, disclosure to third parties or utilization of its contents – in whole or in parts – is forbidden without prior written consent of OmniOn Power. This document does not convey license to any patent or any intellectual property right. Copyright© 2023 OmniOn Power Inc. All rights reserved.

© 2023 OmniOn Power Inc. All rights reserved.

Unikeyic Electronics

Global Electronic Components Distributor

Click to view pricing, inventory, delivery, and lifecycle information:

OMNION POWER:

APTS003A0X-SRZ AXB050X43-SRZ EBVW020A0B41Z UDXS1212A0X3-SRZ CP2725AC48TEZ-FB2 MLX120A0XY3-SRZ PKX014A0X43-SRZ PVX003A0X3-SRZ ABXS005A4X341-SRZ APTS006A0X-SRZ AXH005A0XZ EHHD010A0B641-HZ EHHD020A0F41Z EHW007A0B41Z PNVT006A0X3-SRZ EVAL_TJT120 EVW010A0B41Z MLX160A0XY3-SRZ EHHD024A0A41-HZ KHHD004A2B41Z KHHD010A0A41Z PNVX002A0X3-SRZ EHHD015A0A41-HZ EVAL APTS030A0X3-SRPHZ QBDW033A0B41-HZ NQR010A0X4Z APXW003A0X3-SRDZ CP2500DC54-PEZ EBVW020A0B41-HZ EQW020A0F1Z