ROHS

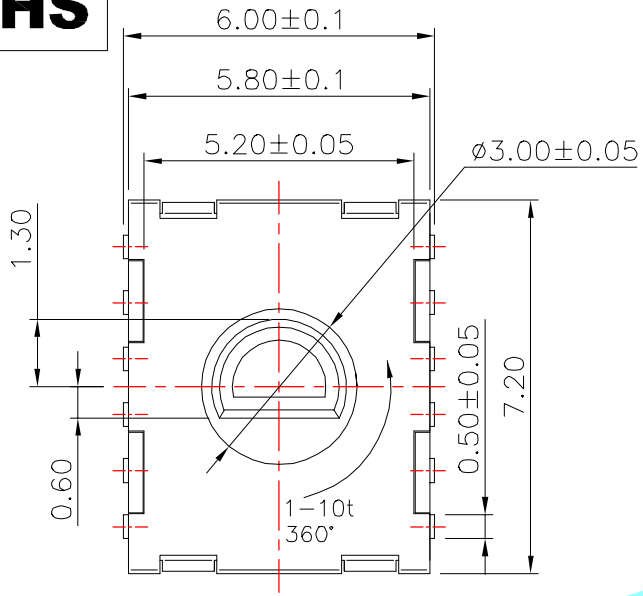

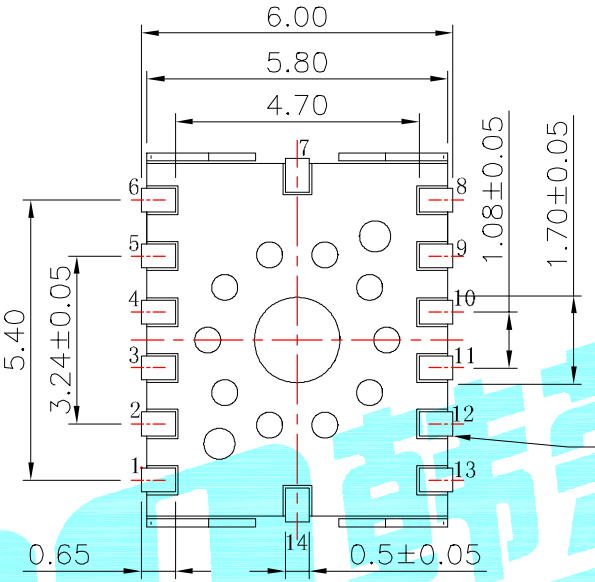

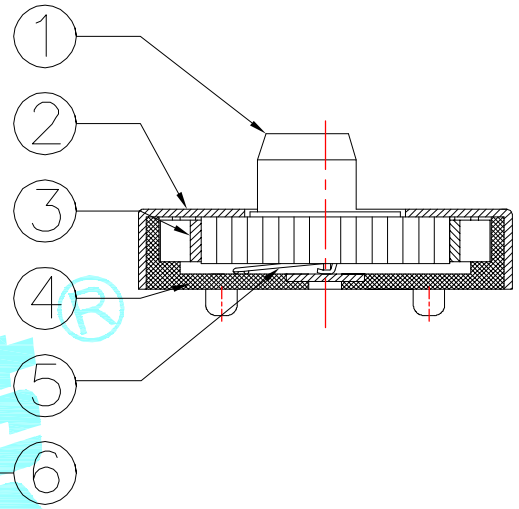

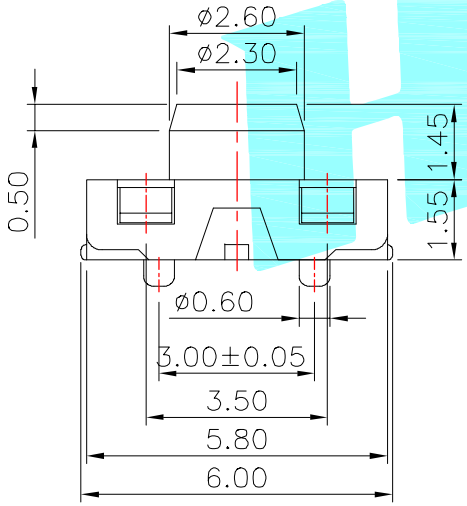

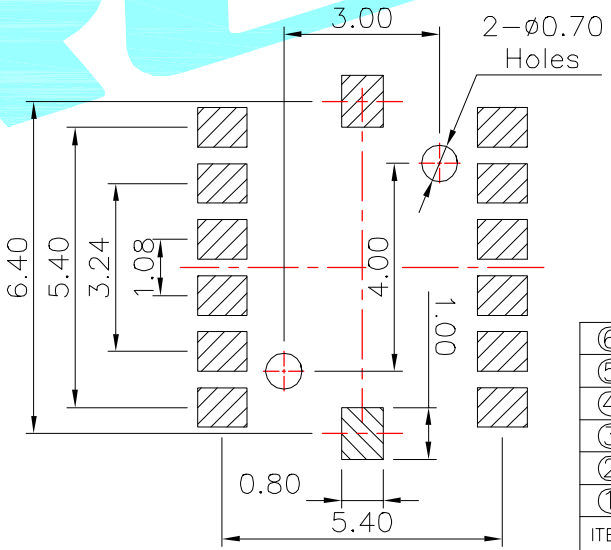

P.C.B Mounting
Pattern Dimension

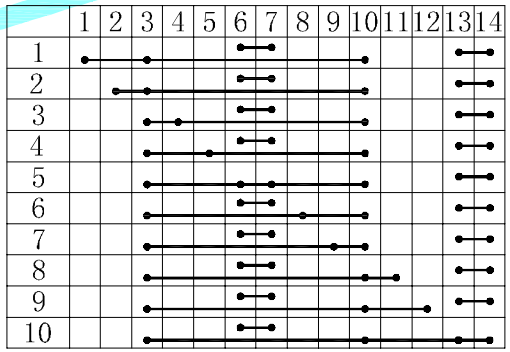

Circuit Diagram

NOTE:
Operating Force: 180±50 gf

ITEM	PART NAME	TER'NO.	QTY.	MATERIAL	FINISHING	REMARK
⑥	Terminal	——	14	Brass(0.15t)	Plating silver	——
⑤	Contact	——	1	F.Ag/Brass	Plating silver	——
④	Base	——	1	Nylon	Black	——
③	Spring plate	——	1	SUS	Natural	——
②	Cover	——	1	SUS	Natural	——
①	Keystoke	——	1	Nylon	Black	——

APPROVALS		DATE	HRO韩荣® ELECTRONICS CO.,LTD	
DRAWN	J.X.Zhang	2013/8/12		
CHECKED			TITLE:	MULTIFUNCTIONAL SWITCHS
APPROVALS			PART NO.	K1-1532SA-01

TOLERANCES ARE			ANGLE	UNIT: mm	SCALE: 1:1	PROJ:
	30~以上	±0.30				
	10~30	±0.20				
	5~10	±0.15	±2°	DRAWING NO.	——	SHEET 1 OF 1
	~ 5	±0.10				

ECN NO.	REV.	DATE.	DESCRIPTION.	CHANGE.	CHECK.	APPRO.
——	A	——	NEW	——	——	——

Unikeyic Electronics

Global Electronic Components Distributor

Click to view pricing, inventory, delivery, and lifecycle information:

HRO:

K2-1102DF-L4CW-01 K2-1103DP-W4SW-04 K1-1501SA-02 K2-1187SR-A4SW-06 K9-2841L-6LDL
K9-2841R-6YBP-1B PJ-201-5A K9-2841L-6XCL-1B K9-2841R-6RDL K9-2841R-6WCM-1B
K2-1839DP-I4SW-06 K2-6639DP-O4SW-04 K2-6639SP-A4SC-04 K5-1130SA-03 K2-1109SP-L3SA-04
K2-6639SP-M4SC-04 K6-6162D04 K9-1801G K2-1109DF-K4SW-04 K2-1839SP-H5SW-02 K9-2841R-6HDD
K9-2841R-6WCP-1B K2-1102BQ-G4CW-01 K9-2841L-6XCN-1B 1.25T-10P-DP 1.25T-5P-WT DP-09RP
K8-5851E-L1 K9-2821D-7HDD K9-2841L-6WDL-1B