ROHS Compliant

MAPX	MODIFICATION	DATE	DRAW	APPROVE

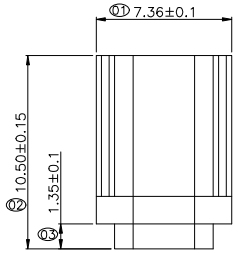

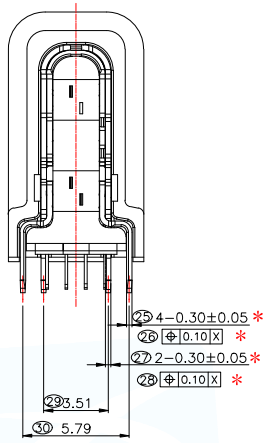

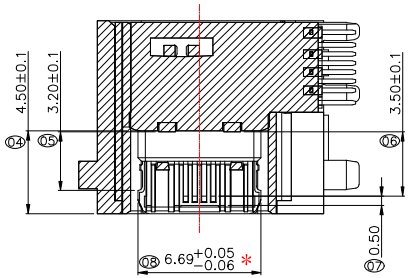

SECTION A–A

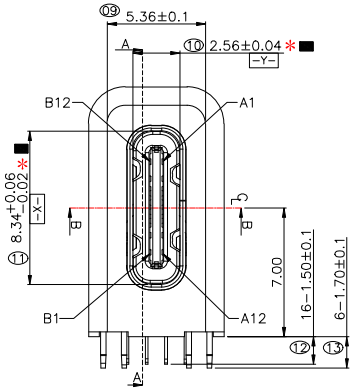

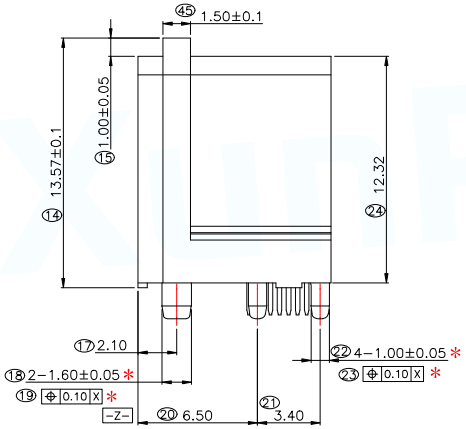

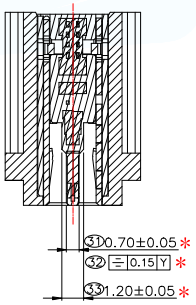

SECTION B–B

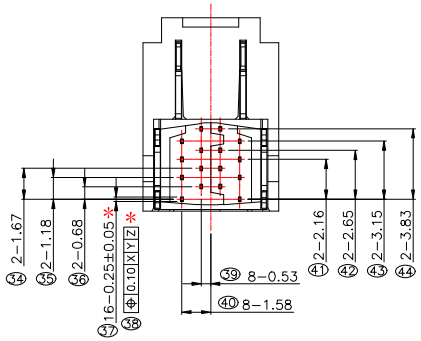

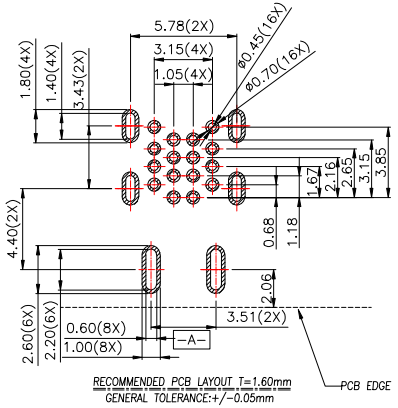

PIN ASSINGMENT											
A1	A2	A3	A4	A5	A6	A7	A8	A9	A10	A11	A12
GND	\	\	VBUS	CC1	Dp1	Dn1	SBU1	VBUS	\	\	GND
GND	\	\	VBUS	SBU2	Dn2	Dp2	CC2	VBUS	\	\	GND
B12	B11	B10	B9	B8	B7	B6	B5	B4	B3	B2	B1

NOTE:

1. Electrical Characteristics:
   1–1: Current Rating: 5A For Pin(A4,A9,B4,B9)
   1.25A For Pin(B5)
   0.25A For Others Pin
   1–2: VOLTAGE RATING:20V
   1–3: Insulation Resistance: 100MΩ Min.
   1–4: Contact Resistance:
   VBUS & GND PINS AND OTHER PINS: 40mΩ/PIN MAX.
   SHIELD:50mΩ/MAX.
   SHIELD:LLCR MAX. CHANGE OF ALL PINS: 10mΩ.
   1–5: Dielectric Withstanding Voltage: 100V/AC 1Minute
2. Mechanical Characteristics:
   Insertion Force: 5~20N
   Extraction Force: Initial: 8~20N
   After durability: 6~20N
   Durability :10000 Cycles
3. Operating Temperature: –25°C TO +85°C
4. 防水等级IPX4
5. 注：带"*"号的为重点管控尺寸
   "(XX)"为尺寸编码

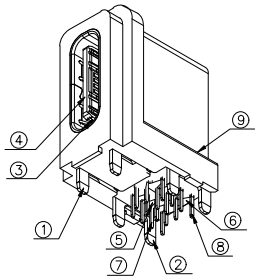

NO.	NAME	QT'Y	MATERIAL	PLATING
⑨	Jacket	1	LCP E130i,UL94 V–0	Black
⑧	Up Terminal	12	C7025–TM02,T=0.15	Contact Area:Pd Ni 0.30um Min, Au Solder Area:Au 0.05um Min Ni 2.0–5.0um over all
⑦	Down Terminal	12		
⑥	Up Moding	1	LCP E130i,UL94 V–0	Black
⑤	Down Moding	1		
④	Second Moding	1		
③	中夹片	1	SUS301–H,T=0.20	Ni 1.0–5.0um Underplating
②	内壳	1	SUS304–3/4H,T=0.30	Ni 1.0–5.0um Underplating
①	外壳	1	SUS304–3/4H,T=0.30	Ni 1.0–5.0um Underplating

MANUFACTURE DWG

东莞市讯普电子科技有限公司
DongGuan XunPu Electronics Co,Ltd

UNLESS OTHERWISE SPECIFED TOLERANCES

DECIMALS:	ANGLES:
.X:±0.30	X°.:±3°
.XX:±0.20	X.X°:±2°
.XXX:±0.10	

TITLE:Type C Female16P CH7.0
防水 45W 侧立式

PAR	TYPEC–313DCL–ARP16X4	
DWN		
CHKD		
APVD		
SCALE1:1	UNIT:MM	
CUSTOMER COPY	SIZE:A4	SHEET:1F1 REV:A

ROHS Compliant

MAPX	MODIFICATION	DATE	DRAW	APPROVE

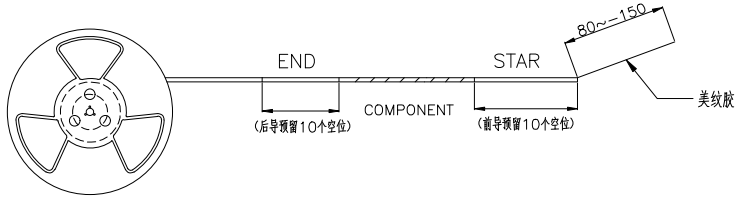

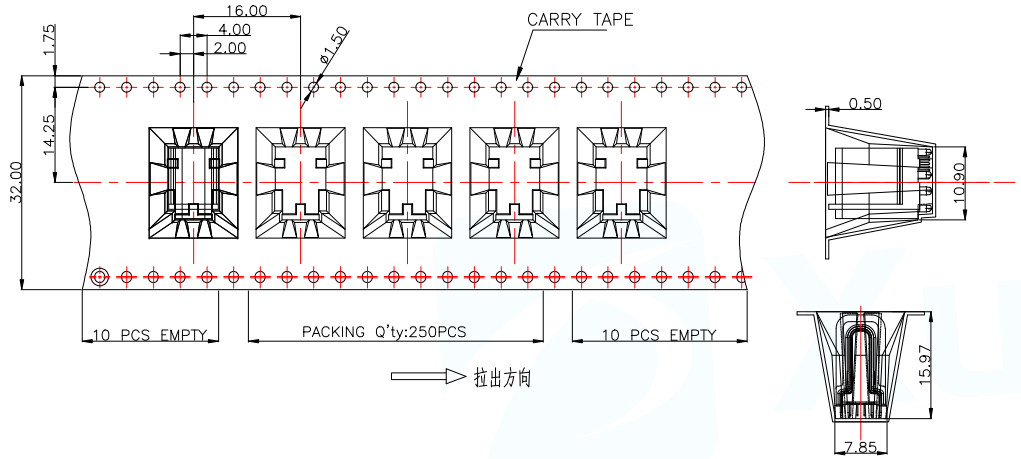

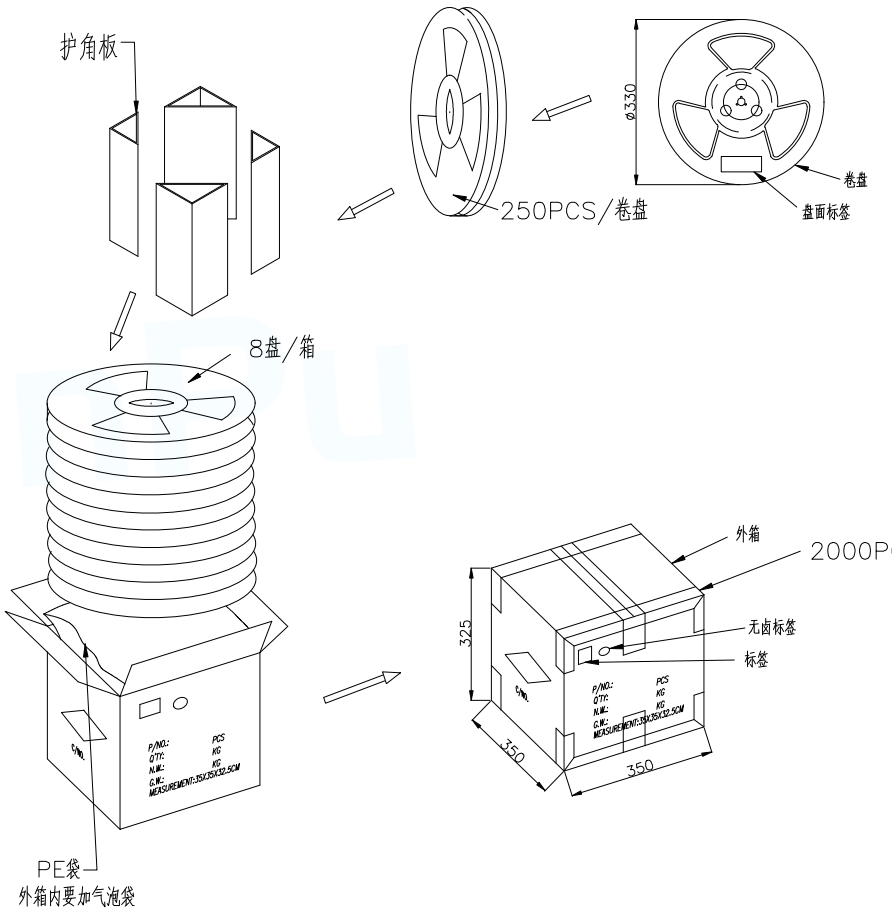

备注:

1. 包材规格:
   卷盘: ø330*W32mm
   卷带: W=32*P=16mm*T=0.5mm 透明防静电PET
   三角纸板: 100*140*100mm,H=315mm,K=K
   自粘式上带: W=25.5*T=0.08mm
   PE袋: T0.007*W65*H65CM
   外箱: 350*350*325mm K=K
2. 将产品依左图所示装入载带中,产品前空10空格、后空10格;再将上带与载带粘好,绕完后用80—150mm长度的美纹胶粘在载带上,250pcs/卷盘,每卷盘都需贴卷盘装标签.
3. 将8个卷盘放入1个大PE防水袋,装入外箱时要加气泡袋,再将护角板装入外箱,共计2000pcs/外箱.
4. 将装好产品外箱用透明胶带封成"工"形,并在外箱左上角贴无卤标签,物料标识区分用的"外箱标签".

MANUFACTURE DWG	东莞市讯普电子科技有限公司 DongGuan XunPu Electronics Co,Ltd		
UNLESS OTHERWISE SPECIFED TOLERANCES		TITLE:Type C Female16P CH7.0 防水 45W 侧立式 包装规范	
		PAR	TYPEC-313DCL-ARP16X4
DECIMALS: / ANGLES:		DWN	
.X:±0.30 / X°.:±3°		CHKD	
.XX:±0.20 / X.X°:±2°		APVD	
.XXX:±0.10	CUSTOMER COPY	SCALE1:1 / UNIT:MM	
		SIZE:A4 / SHEET:1F1	REV:A

Unikeyic Electronics

Global Electronic Components Distributor

Click to view pricing, inventory, delivery, and lifecycle information:

XUNPU:

FPC-0.5FX-4PWCR-H20 RJ45-005-014-11 SMA-KWE-323C-H13X23-LW WAFER-PH2.0-3PWB
WAFER-MX1.25B-8PWB FPC-0.5HF-10PWBR-H20 WAFER-WBM4.2-16PJK-GB
WAFER-XH2.54-4PWZ-H62 FPC-0.5AL-6PB FPC-0.5AX-24PWCR-H20 FPC-0.5AX-30PWCR-H20
FPC-0.5FX-4PWBH15 FPC-1.0AX-14PWCR-H25 TYPEC-304YDSW-ACP16 PHB2.0-02-20PZZ
FPC-1.0HF-4PWAR-H20 FPC-0.5AS-5PWCR-H20 FPC-0.5FX-20PWBH15 HDMI-212L WAFER-PH2.0-8PLB
FPC-0.5FX-16PWCR-H20 WAFER-PH2.0-11PZZ WAFER-GH1.25-6PLB WAFER-PH2.0-2PJK
WAFER-PH2.0-6PWB WAFER-VH3.96-4PLB FPC-1.0AX-4PWCR-H25 MU-103-ARW64 DC-031A-A100
FPC-0.5FX-14PWCR-H20