CAD FILE:

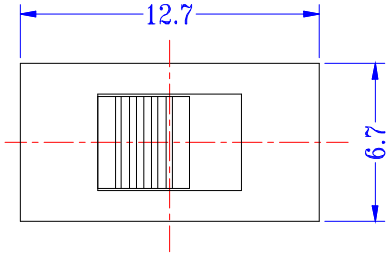

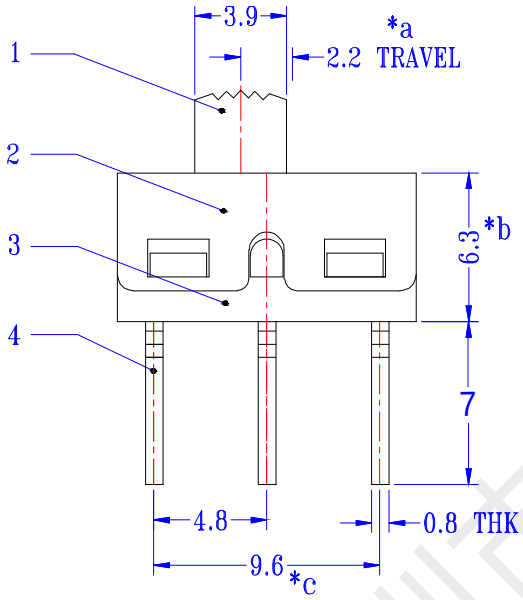

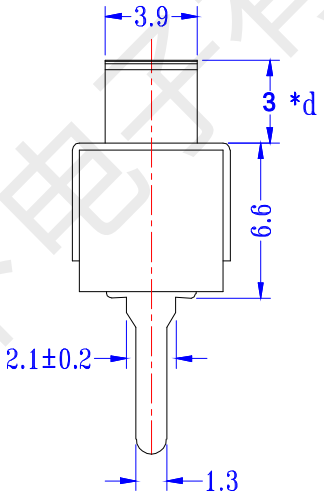

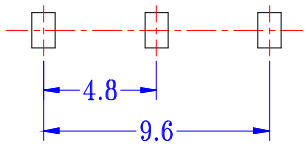

P.C.B LAYOUT
BOTTOM VIEW

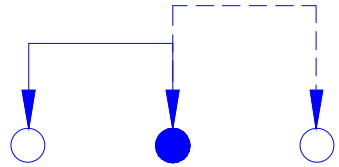

SCHEMATIC(NON-SHORTING)

所有标注尺寸公差为：±0.2mm

NO.	PARTS	MATERIALS	Q'TY	FINISH
8				
7	PRESS BAR	NYLON+F.G+94V0(PA9T)	1	BLACK
6	SPRING	STEEL WIRE	1	NATURAL
	CONTACT	COPPER STRIP	1	Ag PLATED
4	TERMINAL	COPPER STRIP	3	Ag PLATED OVER Ni PLATED
3	CASE	NYLON+F.G+94V0(PA9T)	1	BLACK
2	COVER	SUS	1	NATURAL
1	KNOB	NYLON+F.G+94V0(PA9T)	1	BLACK

TOLERANCE UNLESS SPECIFIED
WITHIN : ±0.2mm
OVER : ±0.2mm

ISSUE	DATE	DESCRIPTIONS OF REVISION	APPD.
A			

TITLE : VERTICAL SLIDE SWITCH
MODEL: HX SS-12D10G3
UNIT : mm
SCALE: 3 : 1
DRWG NO.: HR-DR-SS12D10-00

DWN.	黄彬	2020.6.24
CHK'D	张伟	2020.6.24
APPD.	罗小春	2020.6.24

深圳市韩下电子有限公司

深圳市韩下电子有限公司

深圳市韩下电子有限公司
Shenzhen Hanxia Electronic Co., Ltd
Tel: 0755-23086569

承　认　书

SPECIFICATION FOR APPROVAL

产 品 编 码
Material code: _____

产品名称 Project：滑动开关

规格型号 Part No：HX SS12D10G3

贵公司承认印 Approal slgnatures

料 号/Part No.	签　章/Signatures

日期 Date:

拟制/Drawn	黄彬	深圳市韩下电子有限公司 工程专用章
审核/Check	张伟	
批准/Approved	罗小春	

深圳市韩下电子有限公司

深圳市韩下电子有限公司

SPECIFICATION 规格书

1:GENERAL SPECIFICATION 基本事项			
1.1	RATING (额定值)：DC 125V 2A		
1.2	PRACTICAL TEMPERATURE RANEG: -25℃~+70℃. 使用温度范围: 在-25℃~+70℃溫度內使用.		
1.3	STANDARD ATMOSPHEIC CONDITIONS : UNLESS OTHERWISE SPECIFIED. THE STANDARD RANGE OF ATMOSPHERIC CONDITIONS FOR MAKING MEASUREMENTS AND TESTS ARE AS FOLLOWS: (1) AMBIENT TEMPERATURE : 5℃ TO 35℃; (2) RELATIVE HUMIDITY : 45% TO 85%; (3) AIR PRESSURE : 86Kpa TO 106Kpa. 测试标准状态: 在沒有指定的情況下测试温度，湿度，气压如下: (1)温度为5~35℃; (2)湿度为45%~85%; (3) 气压为86Kpa~106Kpa.		
2. ELECTRICAL CHARACTERISTICS (电气性能规格)：			
ITEM 项目		TEST CONDITIONS 测试条件	PERFORMANCE(DATA)规格(数据)
2.1	CONTACT RESISTANCE 接触电阻	MEASURED AT 1KHz SMALL CURRENT(100 mA OR LESS)在1KHz微小电流(100mA 以下)测试.	100mΩ MAX. 100毫欧以下.
2.2	INSULATION RESISTANCE 绝缘电阻	APPLY A VOLTAGE OF 500V DC FOR 1 MIN. THE FOLLOWING CONTACE TEST METHOD: (1)BETWEEN BODY AND CONDUCTOR. (2) BETWEEN CONDUCTORS NOT TO BE CONTAC. 输入500V DC电压1分钟，按以下接触方法测试: (1)接触端子之间. (2)胶座体和排脚之间.	100MΩ MIN. 100兆欧以上.
2.3	ELECT RIC STRENGTH 耐电压	AC 500V(50-60Hz) FOR 1 MIN TRIP CURRENT:0.5mA THE FOLLOWING CONTACE TEST METHOD: (1)BETWEEN TERMINALS. (2) BETWEEN INDIVIDUAL TERMINALS AND FRAME. 输入AC500V(50-60Hz) 电压，1分钟感度电流为0.5mA，接触测试方法如下: (1)接触端子之间. (2)外壳体和排脚之间.	THOUT DAMAGE TO PARTS ARCING OR BREAKDOWN ETC. 沒有绝缘破坏等异常
3 .MECHANICAL CHARACTERISTICS (机械性能规格)：			
ITEM 项目		TEST CONDITIONS 测试条件	ERFORMANCE(DATA)规格(数据)
3.1	OPERATION FORCE 动作力	LATERAL PUSH (侧向推动)	PUSH FORCE (推动力度):250gf±100gf
3.2	TRAVEL TO CLOSURE 动作行程	IN THE HORIZONTAL DIRECTION SWITCH HANDLE OPRATION,WITH AN EQUAL TO 2TIMES THE THRUST OF THE SWITSH FORM ONE POSITION TO THE NEXT GEAR, MOVING DISTANCE MEASURING HANDLE. 在开关推柄运行的水平方向，以一个等于2倍推力使开关从一个档位运动到下一档位，测量推柄的移动距离.	2.2mm±0.2mm
3.3	STEM STRENGTH 操作部(柄)强度	AND ALONG THE RUNNING DIRECTION AT APEX HANDLE(500gf) ON THESTRENGTH TEST,TIME IS 30SECONDS. 在推柄的先端沿运行方向加上(500gf)力度测 试，时间为30秒.	THERE SHALL BE NO DAMAGE ONAPPEARANCE MECHANICAL AND ELECTRICAL CHARACTERISTICS SHALL BE SATISFIED 外观无异常，满足于机械，电气性能

4. DURABILITY(耐久性）：			
ITEM 项目		TEST CONDITIONS 测试条件	PERFORMANCE(DATA) 规格(数据)
4.1	LIFE TEST 寿命试验	AN ACTUATOR SHALL BE WITH A THRUST OF NO GREAT THAN 1 TIMES SWITH POWER TO 10000 CYCLES AT A SPEED OF 30 CYCLES FOR 1 MIN. 操作者以每分钟30次的频率，施加不大于开关1倍的推力 做 10000 次无负荷测试.	1)CONTACT RESISTANCE SHALL BE 50mΩ MAX. 2)LIFETIME:10000次 1)接触电阻不超于50mΩ. 2)寿命:10000次
4.2	HEAT TEST 耐热实验	THE SWITCH SHALL BE STORED AT A TEMPERATURE OF 85±2℃ FOR 96 HOURS. AND THEN IT SHALL BE SUBJECTED TO THE CONTROLLED RECOVERY CONDITIONS FOR 1 HOUR AFTER WHICH MEASUREMENT SHALL BE MADE. 放置在温度85±2℃中96小时后，再放置正常室温 中1小时后测定.	THERE SHALL BE NO DAMAGE ONAPPEARANCE MECHANICAL AND ELECTRICAL CHARACTERISTICS SHALL BE SATISFIED 外观无异常，满足于机械， 电气性能
4.3	COLD TEST 耐冷实验	THE SWITCH SHALL BE STORED AT A TEMPERATURE OF-25±3℃ FOR 96 HOURS. AND THEN IT SHALL BE SUBJECTED TO THE CONTROLLED RECOVERY CONDITIONS FOR 1 HOUR AFTER WHICH MEASUREMENT SHALL BE MADE. 放置在温度-25±3℃中96小时后，再放置正常室温中1小时后测定.	
4.4	HUMIDITY TEST 潮湿实验	THE SWITCH SHALL BE STORED AT A TEMPERATURE OF 40±2℃ AND A HUMIDITY OF 80% TO 85% FOR 96 Hr. THEN THE JACK SHALL BE MAINTAINEDAT STANDARD ATMOSPHERIC CONDITION FOR 1 Hr FOR OTHER PROCEDURES. 放置在40±2℃相对湿度为80～85%环境中96小时后， 再将样品放在正常室温中1小时后测定.	
4.5	SOLDERING CONDITIONS 焊锡条件	HAND SOLDERING 手焊： 1）DIVCE 工具：SOLDER IRON 电烙铁. A.350℃MAX.,2 sec Max B.270℃MAX.,4 sec Max	THERE SHALL BE NO DAMAGE ONAPPEARANCE MECHANICAL AND ELECTRICAL CHARACTERISTICS SHALL BE SATISFIED 外观无异常，满足于机械， 电气性能