Push-in fittings and connectors QS, Quick Star

FESTO



Push-in fittings QS, Quick Star

Features

Application



Effortless selection of the right fitting. Festo offers a secure solution for every connection. The convenient push-in fitting system includes well over 1000 types of standard and function fittings.

Summary of tubing/fitting combinations

Applications	Fitting	Tubing	Description
Standard	QS-B	PEN	Suitable for a wide range of tasks and attractively priced. Flexible thanks to highly resistant materials, easy to install thanks to optimised bending radii. High level of abrasion resistance in dynamic applications.
	QS	PUN	Maximum flexibility in standard applications thanks to an extremely wide range of options for combining the different types.
	QS	PAN	Meets all requirements, even for standard applications with increased pressure and temperature ranges.
High pressures	NPQM	PAN-MF	Meets DIN standard 73378: ideal for use in mobile pneumatics. Suitable for increased temperature ranges combined with high pressure ranges.
	NPQH	PAN-R	Powerful in pressure ranges up to 20 bar, for example in applications with the pressure booster DPA.
Resistant to chemicals, food safe and hydrolysis resistant	NPQP	PLN	Resistant to cleaning agents, FDA compliant and economical. Can be used instead of the combination with stainless steel fittings.
	NPKA	PUN-H	Hydrolysis resistant and suitable for water applications. Combination suitable for use in clean rooms, FDA compliant and corrosion resistant thanks to 100% polymer construction. Very easy to install thanks to the “one click principle”.
	NPQH	PFAN	For high temperatures up to 150 °C. Suitable for use in the food industry, FDA compliant and resistant to cleaning agents.
	NPCK	PFAN	Easy to clean thanks to the union nut’s edge-free design. Maximum resistance to corrosion (CRC 4) and FDA compliant. Suitable for a wide range of media.
	CRQS	PFAN	Maximum resistance to corrosion (CRC 4) and to aggressive acids and lyes.
Anti-static	NPQM	PUN-CM	Anti-static tubing plus solid metal fitting: maximum protection for electrical and electronic components.
Flame retardant	NPQM	PUN-V0	Very safe in areas where there is a risk of fire thanks to flame-retardant properties. The tubing has been tested to DIN 5510-2.
Resistant to welding spatter	NPQH	PUN-V0-C	Ideal for applications involving welding spatter. Reliable thanks to a tubing wall thickness of 2 mm for all diameters.
	QS-V0	PAN-V0	Safe even in the immediate vicinity of welding spatter thanks to the double-walled tubing with special fitting.

Push-in fittings QS, Quick Star

Features

Push-in fittings product range

QSM, Quick Star, Mini

Technical data ➔ Internet: qsm



Miniature push-in fittings for maximum component density in confined spaces. For pneumatic applications with a temperature range up to 80 °C and a pressure range up to 14 bar.
Tubing O.D.∅ of 2, 3, 4 and 6 mm with connecting threads M3, M5, M6, M7, R⅛ and G⅛.

QS, Quick Star, standard

Technical data ➔ Internet: qs



Wide selection of push-in fittings for pneumatic applications with a temperature range up to 80 °C and a pressure range up to 14 bar.
Tubing O.D.∅ of 4, 6, 8, 10, 12, 16 and 22 mm with connecting threads R⅛ ... R½ and G⅛ ... G¾.

QSM-B, Quick Star, Mini

Technical data ➔ Internet: qsm-b



Miniature push-in fittings for maximum component density in confined spaces. For core pneumatic applications with a temperature range up to 60 °C and a pressure range up to 10 bar.
Tubing O.D.∅ of 3, 4 and 6 mm with connecting threads M3, M5, M7 and R⅛.

QS-B, Quick Star, standard

Technical data ➔ Internet: qs-b



Push-in fittings for core pneumatic applications with a temperature range up to 60 °C and a pressure range up to 10 bar.
Tubing O.D.∅ of 4, 6, 8, 10, 12 and 16 mm with connecting threads M5 and R⅛ ... R½.

CRQS, Quick Star, stainless steel

Technical data ➔ Internet: crqs



Stainless steel push-in fitting. High corrosion resistance (CRC4) and chemical resistance with approval for use in the food and packaging industry. For pneumatic applications with a temperature range up to 120 °C and a pressure range up to 10 bar.
Tubing O.D.∅ of 4, 6, 8, 10, 12 and 16 mm with connecting threads M5 and R⅛ ... R½ .

QS-V0, Quick Star, flame-retardant

Technical data ➔ Internet: qs-v0



Flame-retardant push-in fitting for use in all areas where there is a risk of fire, for example welding systems in the automotive industry and in the construction industry. For pneumatic applications with a temperature range up to 60 °C and a pressure range up to 10 bar.
Tubing O.D.∅ of 4, 6, 8, 10 and 12 mm with connecting threads R⅛ ... R½ and G⅛ ... G½ .

Push-in fittings QS, Quick Star

Features

Push-in fittings product range

NPQH — Technical data ➔ Internet: npqh



All metal push-in fitting made of chemically nickel-plated brass. High corrosion resistance (CRC3) and chemical resistance. For pneumatic applications with a temperature range up to 150 °C and a pressure range up to 20 bar.
Tubing O.D.∅ of 4, 6, 8, 10, 12 and 14 mm with connecting threads M5, M7 and G1⁄8 ... G1⁄2 .

NPQM — Technical data ➔ Internet: npqm



Attractively priced metal push-in fitting for pneumatic applications with a temperature range up to 70 °C and a pressure range up to 16 bar.
Tubing O.D.∅ of 3, 4, 6, 8, 10, 12 and 14 mm with connecting threads M5, M7 and G1⁄8 ... G1⁄2 .

NPQP — Technical data ➔ Internet: npqp



Polypropylene fitting for use in applications with extreme media influences. For pneumatic applications with a temperature range up to 60 °C and a pressure range up to 10 bar.
Tubing O.D.∅ of 4, 6, 8, 10 and 12 mm with connecting threads R1⁄8 ... R1⁄2.

Functional push-in fittings product range

QSK, Quick Star, self-sealing push-in fitting — Technical data ➔ Internet: qsk



Push-in fitting that blocks the air flow after the tubing is disconnected. For pneumatic applications with a temperature range up to 60 °C and a pressure range up to 14 bar.
Tubing O.D.∅ of 4, 6, 8, 10 and 12 mm with connecting threads M5, R1⁄8 ... R1⁄2 and G1⁄8 ... G1⁄2.

QSR, Quick Star, rotary push-in fitting — Technical data ➔ Internet: qsr



Push-in fitting with swivel connection, rotatable by 360°. The ball bearing enables rotating movements in the application up to max. 500 rpm. For pneumatic applications with a temperature range up to 60 °C and a pressure range up to 14 bar.
Tubing O.D.∅ of 4, 6, 8, 10 and 12 mm with connecting threads M5, R1⁄8 ... R1⁄2 and G1⁄8 ... G1⁄2.

Quick connectors product range

NPCK — Technical data ➔ Internet: npck



Stainless steel fitting for use in areas subject to intensive cleaning. Highest level of corrosion resistance (CRC 4). For pneumatic applications with a temperature range up to 120 °C and a pressure range up to 12 bar.
Tubing O.D.∅ of 4, 6, 8 and 10 mm with connecting thread M5 and G1⁄8 ... G3⁄8.

Click fittings product range

NPKA — Technical data ➔ Internet: npka



Plastic fitting for easy installation with one-hand operation. Hydrolysis resistant, FDA compliant and easy to clean. For pneumatic applications with a temperature range up to 60 °C and a pressure range up to 10 bar.
Tubing O.D. 6 mm with connecting thread G1⁄8.

Push-in fittings QS, Quick Star

Key features

Simply "plug and work"	Reliably connected	Captive seal	Orientable
		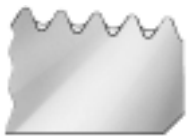	
The stainless steel retaining claw within the fitting holds the tubing securely without damaging its surface. Vibration and pressure surges are safely absorbed.	A nitrile rubber sealing ring guarantees a perfect seal between standard OD tubing and the body of the fitting. Standard tubing is suitable for use with compressed air and vacuum.	All brass parts of Festo's push-in fittings are nickel plated and are thus highly resistant to corrosion. The tapered ISO R threads have a self-sealing PTFE coating, which allows the fitting to be re-used up to five times without the need for additional sealing components.	The fitting can be aligned after assembly.

Tube assembly/disassembly

Mounting

The prerequisite for ensuring that the inside seal is securely held and protected against damage is that the tube be cut to straight lengths and deburred.

1) Insert tubing until the end stop. It is important to ensure that the tubing is inserted into the inside seal. Depending on the tolerance position of the tubing and the seal, the contact of the tubing with the seal may be wrongly interpreted as the end stop.
2) Check that the tubing connector is securely held by pulling gently on the tube.

Dismantling

1) The tubing can be detached easily by pressing down and holding the releasing ring. Remove the tubing carefully from the threaded connector.
2) Before re-using the tubing, remove the damaged part by cutting it off.

Push-in fittings QS, Quick Star

Key features

Which fitting fit which thread?

Metric parallel thread

- Cylindrical metric thread is comparable with G thread
- Sealing is guaranteed via a sealing ring
- Sealing on front face

G parallel thread to ISO 228-1

- Shorter thread
- Constant installation depth
- Replaceable sealing ring
- Sealing on front face
- Can be re-used a number of times thanks to replaceable sealing ring

R tapered thread to EN 10226-1 and ISO 7/1

- Self-sealing thread
- Sealing via coated threads
- No additional sealing surface required
- Smaller installation dimensions since there is no need for a rebate for the sealing surface
- Can be re-used up to five times

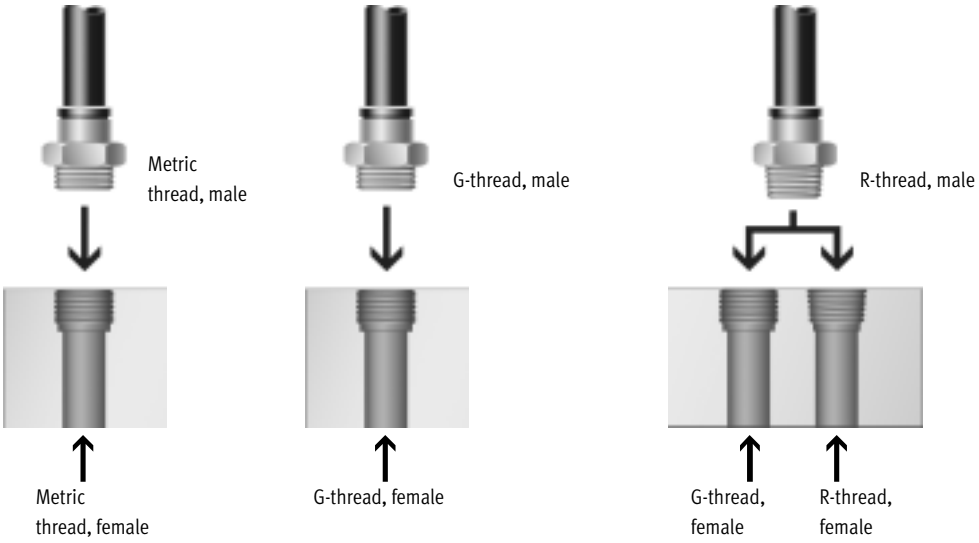

Materials

Sectional view

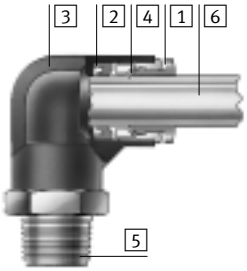

Size		Mini QSM Standard QS	Mini QSM-B Standard QS-B
1	Release ring	POM (colour: blue)	POM (colour: blue)
2	Seal	NBR	NBR
3	Body	Nickel-plated brass, PBT QSM-M3-3/4: Nickel-plated steel	Nickel-plated brass, PBT
4	Tube retaining claw	High-alloy stainless steel	High-alloy stainless steel
5	Threaded coupling	Nickel-plated brass M3: Nickel-plated steel	Nickel-plated brass M3: Nickel-plated steel
6	Plastic tubing with standard O.D.	PAN PEN PUN PUN-H	PAN PEN PUN PUN-H
Note on materials		RoHS-compliant	RoHS-compliant

Size		Standard QS-V0, flame-retardant
1	Release ring	PBT-reinforced (colour: black)
2	Seal	NBR
3	Body	PBT-reinforced
4	Tube retaining claw	High-alloy stainless steel Brass
5	Threaded coupling	Nickel-plated brass
6	Plastic tubing with standard O.D.	PAN-V0
Note on materials		RoHS-compliant

Push-in fittings QS, Quick Star

Technical data

Tubing insertion depth



Tubing O.D. [mm]	2	3	4	6	8	10	12	14	16	22
Mini QSM	8.4	9.5	11.5	12	–	–	–	–	–	–
Standard QS	–	–	15 (QSW: 12)	17 (QSW: 12)	18	20.5	23.5	–	24.5	28
Mini QSM-B	–	9.5	11.5	12	–	–	–	–	–	–
Standard QS-B	–	–	14.9	16.9	18.3	20.7	23.2	–	24.5	–
Flame-retardant QS-V0	–	–	20	22	23.5	26	28.5	–	–	–

Recommended tightening torque





When using Quick Star push-in fittings with internal hex, ensure that the Allen key is not inserted too far into the fitting to prevent the risk of damage to components behind the fitting.

Note

All R-threads are coated with a sealing material. This coating replaces the conventional sealing ring. Simply screw in the R-thread by hand and tighten it with 1 or 2 turns of a spanner. The fitting can be reinstalled up to five times.
When screwing in R-threads several times, you must make sure that the abraded particles from the sealing material coating cannot enter the compressed air system.

Connecting thread	Nominal tightening torque [Nm]
M thread	
M3	0.48 ±55%
M5	1.33 ±20%
M7	3.35 ±20%
G thread	
G1/8	7 ±20%
G1/4	9 ±20%
G3/8	15.5 ±20%
G1/2	26 ±20%
G3/4	20 ±20%

General technical data	
Design	Push-pull principle
Mounting position	Any
Type of seal on threaded plug	Sealing ring (metric thread, G thread)
	Coating (R thread)

Operating and environmental conditions					
Size	Mini QSM	Standard QS		Mini QSM-B	Standard QS-B
		Except QS-G¾-22	QS-G¾-22		
Operating pressure complete temperature range [bar]	–0.95 … +6		–0.95 … +14	–0.95 … +10	
Temperature dependent operating pressure [bar]	–0.95 … +14			–	
Operating medium	Compressed air in accordance with ISO 8573-1:2010 [7:–:–]				
	–	Water as per manufacturer's declaration[1)2)]		–	
Note on operating/pilot medium	Operation with lubricated medium possible				
Ambient temperature [°C]	–10 … +80		–20 … +80	–10 … +60	
Corrosion resistance class CRC[3)]	1				
Certification	Germanischer Lloyd		–	Germanischer Lloyd	

Size	Standard QS-V0, flame-retardant
Operating pressure complete temperature range [bar]	–0.95 … +10
Operating medium	Compressed air in accordance with ISO 8573-1:2010 [7:–:–]
	Water as per manufacturer's declaration[1)]
Note on operating/pilot medium	Operation with lubricated medium possible
Ambient temperature [°C]	0 … +60
Corrosion resistance class CRC[3)]	2
Certification	UL - Recognized (OL)
	Germanischer Lloyd

1) Additional information www.festo.com/sp ➔ User documentation.
2) The supplied sealing ring must be replaced with an OL sealing ring on push-in fittings with a G-thread ➔ Internet: ol
3) Corrosion resistance class CRC 1 to Festo standard FN 940070
Low corrosion stress. For dry indoor applications or transport and storage protection. Also applies to parts behind covers, in the non-visible interior area, and parts which are covered in the application (e.g. drive trunnions).
Corrosion resistance class CRC 2 to Festo standard FN 940070
Moderate corrosion stress. Indoor applications in which condensation may occur. External visible parts with primarily decorative requirements for the surface and which are in direct contact with the ambient atmosphere typical for industrial applications.

Operating pressure p as a function of temperature t

Mini QSM
Standard QS (except QS-G¾-22)

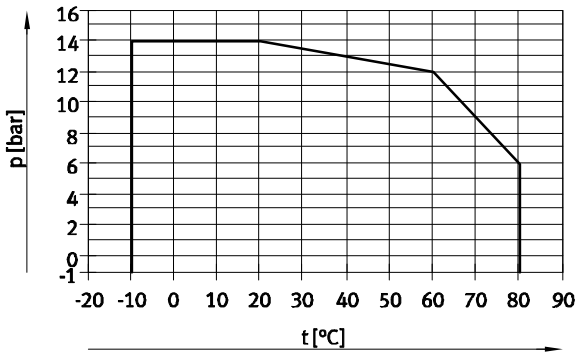

Mini QSM-B
Standard QS-B

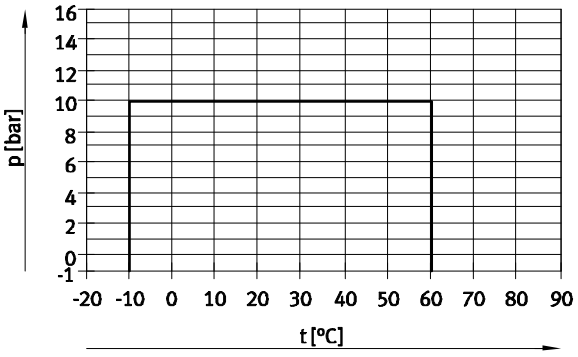

Push-in fittings QS, Quick Star

Technical data

Possible push-in fitting/tubing combinations											
Type	Thread	Tubing O.D. [mm]									
		2	3	4	6	8	10	12	14	16	22
Mini QSM	M3	+	++	+	–	–	–	–	–	–	–
	M5	+	+	++	+	–	–	–	–	–	–
	M6	–	–	++	+	–	–	–	–	–	–
	M7	–	–	+	++	–	–	–	–	–	–
	M8	–	–	–	++	–	–	–	–	–	–
	R1/8	–	–	+	++	–	–	–	–	–	–
	G1/8	–	–	+	++	–	–	–	–	–	–
Standard QS	M5	–	–	++	+	–	–	–	–	–	–
	R1/8	–	–	+	++	+	+	–	–	–	–
	R1/4	–	–	+	+	++	+	+	–	–	–
	R3/8	–	–	–	+	+	++	+	–	+	–
	R1/2	–	–	–	–	–	+	++	–	+	–
	G1/8	–	–	+	++	+	+	–	–	–	–
	G1/4	–	–	+	+	++	+	+	–	–	–
	G3/8	–	–	–	+	+	++	+	–	+	–
	G1/2	–	–	–	–	–	–	++	–	+	–
	G3/4	–	–	–	–	–	–	–	–	–	++
Mini QSM-B	M3	–	++	+	–	–	–	–	–	–	–
	M5	–	+	++	+	–	–	–	–	–	–
	M7	–	–	+	++	–	–	–	–	–	–
	R1/8	–	–	+	++	–	–	–	–	–	–
Standard QS-B	M5	–	–	++	+	–	–	–	–	–	–
	R1/8	–	–	+	++	+	+	–	–	–	–
	R1/4	–	–	+	+	++	+	+	–	–	–
	R3/8	–	–	–	+	+	++	+	–	+	–
	R1/2	–	–	–	–	–	+	++	–	+	–
Flame-retardant QS-V0	R1/8	–	–	+	++	+	–	–	–	–	–
	R1/4	–	–	–	+	++	+	+	–	–	–
	R3/8	–	–	–	–	+	++	+	–	–	–
	R1/2	–	–	–	–	–	+	++	–	–	–
	G1/8	–	–	–	++	+	–	–	–	–	–
	G1/4	–	–	–	+	++	+	+	–	–	–
	G3/8	–	–	–	–	+	++	+	–	–	–
	G1/2	–	–	–	–	–	+	++	–	–	–

\+ Possible thread/tubing O.D. combinations

++ Optimum thread/tubing O.D. combinations (with regard to flow)

Push-in fittings QSM, Quick Star, mini

Product range overview

Design	Version	Type	Connection D1					Connection D2	→ Page/ Internet
			M thread	R thread	G thread	Tubing O.D.	Push-in sleeve ∅	Tubing O.D.	
Straight design	**Push-in fitting – Male thread with external hex**								
		QSM	M3	–	–	–	–	2, 3, 4	24
			M5					2, 3, 4, 6	
			M6					6	
		QSM	–	R⅛	G⅛	–	–	4, 6	
	Push-in fitting – Male thread with internal hex								
		QSM-...-I	M3	–	–	–	–	2, 3, 4	25
			M5					3, 4, 6	
			M7	R⅛	G⅛			4, 6	
	Push-in fitting – Male thread with internal hex, round release ring								
		QSM-...-I-R	M3	–	–	–	–	3, 4	26
			M5					3, 4, 6	
			M7					6	
	Push-in fitting – Female thread with external hex								
		QSMF	M3	–	–	–	–	3, 4	27
			M5					3, 4	
	Push-in fitting – Male thread with internal hex								
		QSMP	M6x0.75	–	–	–	–	4	27
			M8x0.75					6	
	Push-in connector								
		QSM	–	–	–	3	–	3	28
						4		4	
						6		6	
		QSM Reducing	–	–	–	3	–	2	28
						4		3	
						6		4	
	Push-in bulkhead connector								
		QSMS	–	–	–	3	–	–	28
						4			
						6			
	Push-in cap								
		QSMC	–	–	–	3	–	–	29
	Push-in connector with sleeve								
		QSM-...H	–	–	–	–	3	2	29
							4	3	
							6	4	
	Blanking plug								
		QSMC-...H	–	–	–	–	2	–	29
							3		

Push-in fittings QSM, Quick Star, mini

Product range overview

Design	Version	Type	Connection D1					Connection D2	→ Page/ Internet
			M thread	R thread	G thread	Tubing O.D.	Push-in sleeve ∅	Tubing O.D.	
L-shape	**Push-in L-fitting, orientable – Male thread with external hex**								
		**QSML**	M3	–	–	–	–	2, 3, 4	30
			M5					2, 3, 4, 6	
			M7	R⅛	G⅛			4, 6	
	Push-in long L-fitting, orientable – Male thread with external hex								
		**QSMLL**	M3	–	–	–	–	2, 3, 4	31
			M5					2, 3, 4, 6	
			M7	R⅛	G⅛			4, 6	
	Push-in L-fitting, orientable – Male thread with internal hex								
		**QSMLV-...-I**	M5	–	–	–	–	3, 4	32
			M7					4, 6	
	Push-in long L-fitting, orientable – Male thread with internal hex								
		**QSMLLV-...-I**	M5	–	–	–	–	3, 4	32
			M7					4, 6	
	Push-in L-connector								
		**QSML**	–	–	–	3	–	–	33
						4			
						6			
	Push-in L-connector with sleeve								
		**QSML-...H**	–	–	–	–	3	3	33
							4	4	
							6	6	
		**QSML-...H** Reducing	–	–	–	–	4	3	33
							6	4	
T-shape	**Push-in T-fitting, orientable – Male thread with external hex**								
		**QSMT**	M3	–	–	–	–	3, 4	34
			M5					3, 4, 6	
			–	R⅛	G⅛			4, 6	
		**QSMTL**	M3	–	–	–	–	3, 4	35
			M5					3, 4, 6	
			–	R⅛	G⅛			4, 6	
	Push-in T-connector								
		**QSMT**	–	–	–	2	–	2	36
						3		3	
						4		4	
						6		6	
		**QSMT** Reducing	–	–	–	4	–	3	36
						6		4	
X-shape	**Push-in X-connector**								
		**QSMX**	–	–	–	3	–	–	37
						4			
						6			

Push-in fittings QSM, Quick Star, mini

Product range overview

Design	Version	Type	Connection D1					Connection D2	➔ Page/ Internet
			M thread	R thread	G thread	Tubing O.D.	Push-in sleeve ∅	Tubing O.D.	
Y-shape	**Push-in Y-connector**								
		**QSMY**	–	–	–	2	–	2	37
						3		3	
						4		4	
						6		6	
		**QSMY** Reducing	–	–	–	4	–	3	37
						6		4	

Push-in fittings QS, Quick Star, standard

Product range overview

Design	Version	Type	Connection D1					Connection D2		→ Page/ Internet
			M thread	R thread	G thread	Tubing O.D.	Push-in sleeve ∅	Tubing O.D.	Push-in sleeve ∅	
Straight design	**Push-in fitting – Male thread with external hex**									
		**QS**	–	R⅛	G⅛	–	–	4, 6, 8, 10[1]	–	38
				R¼	G¼			4[1], 6, 8, 10, 12		
				R⅜	G⅜			6[1], 8, 10, 12, 16		
				R½	G½			10[1], 12, 16		
				–	G¾			22		40
	Push-in fitting – Male thread with internal hex									
		**QS-...-I**	–	R⅛	G⅛	–	–	4, 6, 8, 10	–	41
				R¼	G¼			6, 8, 10, 12[1]		
				R⅜	G⅜			8, 10, 12		
				R½	G½			10[1], 12		
	Push-in fitting – Female thread with external hex									
		**QSF**	–	–	G⅛	–	–	4, 6, 8	–	42
					G¼			4, 6, 8, 10, 12		
					G⅜			6, 8, 10, 12		
					G½			12, 16		
	Push-in connector									
		**QS**	–	–	–	4	–	4	–	43
						6		6		
						8		8		
						10		10		
						12		12		
						16		16		
		**QS** Reducing	–	–		6	–	4	–	43
						8		4, 6		
						10		6, 8		
						12		8, 10		
	Push-in bulkhead connector									
		**QSS**	–	–	–	4	–	–	–	44
						6				
						8				
						10				
						12				
	Push-in bulkhead connector with fixed collar									
		**QSS-...-F**	–	–	–	4	–	–	–	44
						6				
						8				
						10				
						12				
	Push-in bulkhead fitting with female thread									
		**QSSF**	–	–	G⅛	–	–	4, 6, 8	–	45
					G¼			4, 6, 8, 10		
					G⅜			6, 8, 10, 12		
					G½			12, 16		

1) Only in conjunction with R thread

Push-in fittings QS, Quick Star, standard

Product range overview

Design	Version	Type	Connection D1					Connection D2		➔ Page/ Internet
			M thread	R thread	G thread	Tubing O.D.	Push-in sleeve ∅	Tubing O.D.	Push-in sleeve ∅	
Straight design	**Push-in cap**									
		**QSC**	–	–	–	4	–	–	–	46
						6				
						8				
						10				
						12				
	Push-in connector with sleeve									
		**QS-...H**	–	–	–	–	6	4	–	46
							8	4, 6		
							10	6, 8		
							12	6, 8, 10		
	Push-in sleeve									
		**QSH**	–	–	–	–	4	–	–	47
							6			
							8			
							10			
							12			
							16			
		**QSH** Reducing	–	–	–	–	6	–	4	47
							8		4, 6	
							10		6, 8	
							12		8, 10	
							16		12	
	Blanking plug									
		**QSC-...H**	–	–	–	–	4	–	–	48
							6			
							8			
							10			
							12			
							16			
L-shape	**Push-in L-fitting, orientable – Male thread with external hex**									
		**QSL**	–	R1/8	G1/8	–	–	4, 6, 8, 10[1]	–	49
				R1/4	G1/4			4[1], 6, 8, 10, 12		
				R3/8	G3/8			6[1], 8, 10, 12, 16		
				R1/2	G1/2			10[1], 12, 16		
	Push-in long L-fitting, orientable – Male thread with external hex									
		**QSLL**	–	R1/8	G1/8	–	–	4, 6, 8	–	51
				R1/4	G1/4			4[1], 6, 8, 10, 12[2]		
				R3/8	G3/8			6[1], 8, 10, 12		
				R1/2	G1/2			10[1], 12, 16[2]		
	Push-in L-fitting – Female thread with external hex									
		**QSLF**	–	–	G1/8	–	–	4, 6, 8	–	53
					G1/4			6, 8, 10		
					G3/8			8, 10		

1) Only in conjunction with R thread
2) Only in conjunction with G thread

Push-in fittings QS, Quick Star, standard

Product range overview

Design	Version	Type	Connection D1					Connection D2		→ Page/ Internet
			M thread	R thread	G thread	Tubing O.D.	Push-in sleeve ∅	Tubing O.D.	Push-in sleeve ∅	
L-shape	**Push-in L-fitting, orientable – Male thread with internal hex**									
		**QSLV-...-I**	–	R1/8	G1/8	–	–	6, 8	–	54
				R1/4	G1/4			6, 8, 10		
				R3/8	G3/8			8, 10, 12		
				R1/2	G1/2			12		
	Push-in L-fitting, orientable – Male thread with external hex									
		**QSLV**	M5	–	–	–	–	6	–	55
			–	R1/8	G1/8	–	–	4, 6, 8	–	
				R1/4	G1/4			6, 8, 10		
				R3/8	G3/8			8, 10, 12		
				R1/2	G1/2			12, 16		
	Multiple distributor, orientable – 2 outlets									
		**QSLV2**	–	R1/8	G1/8	–	–	4, 6, 8	–	qslv
				R1/4	G1/4			6, 8, 10		
				R3/8	G3/8			8, 10, 12		
				R1/2	G1/2			12		
	Multiple distributor, orientable – 3 outlets									
		**QSLV3**	–	R1/8	G1/8	–	–	4, 6, 8	–	qslv
				R1/4	G1/4			6, 8, 10		
				R3/8	G3/8			8, 10, 12		
				R1/2	G1/2			12		
	Multiple distributor, orientable – 4 outlets									
		**QSLV4**	–	R1/8	G1/8	–	–	4, 6, 8	–	qslv
				R1/4	G1/4			6, 8, 10		
				R3/8	G3/8			8, 10, 12		
				R1/2	G1/2			12		
	Multiple distributor, orientable – 6 outlets									
		**QSLV6**	–	R1/8	G1/8	–	–	4, 6, 8	–	qslv
				R1/4	G1/4			6, 8, 10		
				R3/8	G3/8			8, 10, 12		
				R1/2	G1/2			12		
	Multiple distributor, orientable – 4 outlets									
		**QSQ**	–	R1/8	G1/8	–	–	4, 6	–	qsq
				R1/4	G1/4			4, 6		
		**QSQ** Reducing	–	–	–	6	–	4	–	qsq
						8		6		

Push-in fittings QS, Quick Star, standard

Product range overview

Design	Version	Type	Connection D1					Connection D2		➔ Page/ Internet
			M thread	R thread	G thread	Tubing O.D.	Push-in sleeve ∅	Tubing O.D.	Push-in sleeve ∅	
L-shape	**Push-in L-connector**									
		**QSL**	–	–	–	4	–	–	–	57
						6				
						8				
						10				
						12				
						16				
	Push-in L-connector with sleeve									
		**QSL-...H**	–	–	–	–	4	4	–	58
							6	6		
							8	8		
							10	10		
							12	12		
		**QSL-...H** Reducing	–	–	–	–	6	4	–	58
							8	6		
							10	8		
							12	10		
		**QSL-...HL** Long push-in sleeve	–	–	–	–	4	4	–	58
							6	6		
							8	8		
							10	10		
							12	12		
T-shape	**Push-in T-fitting, orientable – Male thread with external hex**									
		**QST**	–	R⅛	G⅛	–	–	4, 6, 8, 10[1]	–	59
				R¼	G¼			4[1], 6, 8, 10, 12		
				R⅜	G⅜			6[1], 8, 10, 12, 16		
				R½	G½			10,[1] 12, 16		
	Push-in T-connector									
		**QST**	–	–	–	4	–	4	–	61
						6		6		
						8		8		
						10		10		
						12		12		
						16		16		
		**QST** Reducing	–	–	–	6	–	4	–	61
						8		4, 6		
						10		6, 8		
						12		8, 10		
						16		12		

1) Only in conjunction with R thread

Push-in fittings QS, Quick Star, standard

Product range overview

Design	Version	Type	Connection D1				Connection D2		Connection D3	→ Page/ Internet
			R thread	G thread	Tubing O.D.	Push-in sleeve ∅	Tubing O.D.	Push-in sleeve ∅	Tubing O.D.	
T-shape	**Multiple distributor, orientable – 3 outlets**									
	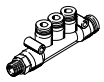	**QST3**	R⅛	G⅛	–	–	6	–	4	qst
			R¼	G¼			8		6	
			R⅜	G⅜			10		8	
		**QST3** Reducing	–	–	6	–	6	–	4	qst
					8		8		6	
					10		10		8	

Design	Version	Type	Connection D1					Connection D2		→ Page/ Internet
			M thread	R thread	G thread	Tubing O.D.	Push-in sleeve ∅	Tubing O.D.	Push-in sleeve ∅	
T-shape	**Push-in T-fitting, orientable – Male and female thread with external hex**									
		**QSTF**	–	R⅛	G⅛	–	–	4, 6, 8	–	62
				R¼	G¼			6, 8, 10		
				R⅜	G⅜			8, 10, 12		
				R½	G½			12		
	Push-in T-fitting, orientable – Male thread with external hex									
		**QSTL**	–	R⅛	G⅛	–	–	4, 6, 8	–	63
				R¼	G¼			6, 8, 10		
				R⅜	G⅜			8, 10, 12		
				R½	G½			12, 16		
Angled design	**Push-in fitting, orientable – Male thread with external hex**									
		**QSW**	–	R⅛	–	–	–	4, 6, 8	–	65
				R¼				6, 8, 10		
				R⅜				10, 12		
				R½				12, 16		
	Push-in connector with sleeve									
		**QSW-HL**	–	–	–	–	4	4	–	66
							6	6		
							8	8		
							10	10		
							12	12		
X-shape	**Push-in X-connector**									
		**QSX**	–	–	–	8	–	–	–	66
						10				
						12				

Push-in fittings QS, Quick Star, standard

Product range overview

Design	Version	Type	Connection D1					Connection D2		➔ Page/ Internet
			M thread	R thread	G thread	Tubing O.D.	Push-in sleeve ∅	Tubing O.D.	Push-in sleeve ∅	
Y-shape	Push-in Y-fitting, orientable – Male thread with external hex									
		QSY	M5	–	–	–	–	4, 6	–	67
			–	R⅛	G⅛			4, 6, 8		
				R¼	G¼			4[1], 6, 8,10		
				R⅜	G⅜			8, 10, 12		
				R½	G½			12		
	Push-in Y-connector									
		QSY	–	–	–	4	–	4	–	69
						6		6		
						8		8		
						10		10		
						12		12		
						16		16		
		QSY Reducing	–	–	–	6	–	4	–	69
						8		4, 6		
						10		6, 8		
						12		8, 10		
						16		12		
	Push-in Y-connector with sleeve									
		QSY-...H(-B)	–	–	–	–	4	4	–	70
							6	6		
							8	8		
							10	10		
							12	12		
		QSY-...H(-B) Reducing	–	–	–	–	6	4	–	70
							8	6		
							10	8		
							12	10		
	Push-in Y-fitting, orientable – Male thread with external hex									
		QSYL	–	R⅛	G⅛	–	–	4, 6, 8	–	71
				R¼	G¼			6, 8, 10		
				R⅜	G⅜			8, 10, 12		
				R½	G½			12		
	Push-in Y-fitting, orientable – Male thread with external hex									
		QSYLV	–	R⅛	G⅛	–	–	6	–	72
				R¼	G¼			8		
				R⅜	G⅜			10		
				R½	G½			12		
	Push-in Y-fitting, orientable – Male and female thread with external hex									
		QSYTF	–	R⅛	G⅛	–	–	6	–	73
				R¼	G¼			8		
				R⅜	G⅜			10		
				R½	G½			12		
Release tool	Quick-release tool for QS push-in fittings and connectors									
		QSO	–							94

1) Only in conjunction with R thread

Push-in fittings QSM-B, Quick Star, mini

Product range overview

Design	Version	Type	Connection D1		Connection D2	→ Page/ Internet
			M thread	R thread	Tubing O.D.	
Straight design	**Push-in fitting – Male thread with external hex**					
		**QSM-B**	M3	–	3, 4	74
			M5		3, 4, 6	
			–	R1/8	4, 6	
	Push-in fitting – Male thread with internal hex					
		**QSM-B-...-I**	M3	–	3, 4	75
			M5		3, 4, 6	
			M7		4, 6	
			–	R1/8	4, 6	
L-shape	**Push-in L-fitting, orientable – Male thread with external hex**					
	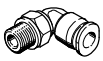	**QSML-B**	M3	–	3, 4	76
			M5		3, 4, 6	
			M7		4, 6	
			–	R1/8	4, 6	
T-shape	**Push-in T-fitting, orientable – Male thread with external hex**					
		**QSMT-B**	M3	–	3, 4	77
			M5		3, 4, 6	
			–	R1/8	4, 6	

Push-in fittings QS-B, Quick Star

Product range overview

Design	Version	Type	Connection D1			Connection D2	➔ Page/ Internet
			M thread	R thread	Tubing O.D.	Tubing O.D.	
Straight design	**Push-in fitting – Male thread with external hex**						
		**QS-B**	–	R⅛	–	4, 6, 8, 10	78
				R¼		4, 6, 8, 10, 12	
				R⅜		6, 8, 10, 12, 16	
				R½		10, 12, 16	
	Push-in fitting – Male thread with internal hex						
		**QS-B-...-I**	–	R⅛	–	4, 6, 8, 10	79
				R¼		6, 8, 10, 12	
				R⅜		8, 10, 12	
				R½		10, 12	
	Push-in connector						
		**QS-B**	–	–	4	4	80
					6	6	
					8	8	
					10	10	
					12	12	
					16	16	
		**QS-B** Reducing	–	–	6	4	80
					8	4, 6	
					10	6, 8	
					12	8, 10	
L-shape	**Push-in L-fitting, orientable – Male thread with external hex**						
		**QSL-B**	–	R⅛	–	4, 6, 8, 10	81
				R¼		4, 6, 8, 10, 12	
				R⅜		6, 8, 10, 12, 16	
				R½		10, 12, 16	
	Push-in long L-fitting, orientable – Male thread with external hex						
	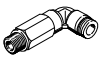	**QSLL-B**	–	R⅛	–	4, 6, 8	82
				R¼		6, 8, 10	
				R⅜		6, 8, 10, 12	
				R½		10, 12	
	Push-in L-connector						
		**QSL-B**	–	–	4	–	82
					6		
					8		
					10		
					12		
					16		
T-shape	**Push-in T-fitting, orientable – Male thread with external hex**						
		**QST-B**	–	R⅛	–	4, 6, 8, 10	83
				R¼		4, 6, 8, 10, 12	
				R⅜		6, 8, 10, 12, 16	
				R½		10, 12, 16	

Push-in fittings QS-B, Quick Star

Product range overview

Design	Version	Type	Connection D1			Connection D2	➔ Page/ Internet
			M thread	R thread	Tubing O.D.	Tubing O.D.	
T-shape	**Push-in T-connector**						
		**QST-B**	–	–	4	4	84
					6	6	
					8	8	
					10	10	
					12	12	
					16	16	
	Push-in T-fitting, orientable – Male thread with external hex						
		**QSTL-B**	–	R1/8	–	4, 6, 8	85
				R1/4		4, 6, 8	
				R3/8		6, 8, 10, 12	
				R1/2		10, 12, 16	
Y-shape	**Push-in Y-fitting, orientable – Male thread with external hex**						
		**QSY-B**	M5	–	–	4, 6	86
			–	R1/8		4, 6, 8	
				R1/4		4, 6, 8, 10	
				R3/8		6, 8, 10, 12	
				R1/2		10, 12	
	Push-in Y-connector						
		**QSY-B**	–	–	4	4	87
					6	6	
					8	8	
					10	10	
					12	12	
					16	16	
		**QSY-B** Reducing	–	–	6	4	87
					8	4, 6	
					10	6, 8	
					12	8, 10	
					16	12	

Push-in fittings QS-V0, Quick Star, flame-retardant

Product range overview

Design	Version	Type	Connection D1					Connection D2		➔ Page/ Internet
			M thread	R thread	G thread	Tubing O.D.	Push-in sleeve ∅	Tubing O.D.	Push-in sleeve ∅	
Flame-retardant to UL94V0 – For plastic tubing PAN/PUN-V0										
Straight design	**Push-in fitting – Male thread with external hex**									
		**QS-V0**	–	R⅛	G⅛	–	–	4[1], 6, 8	–	88
				R¼	G¼			6, 8, 10, 12		
				R⅜	G⅜			8, 10, 12		
				R½	G½			10, 12		
	Push-in connector									
		**QS-V0**	–	–	–	4	–	–	–	89
						6				
						8				
						10				
						12				
L-shape	**Push-in L-fitting – Male thread with external hex**									
		**QSL-V0**	–	R⅛	G⅛	–	–	4[1], 6, 8	–	90
				R¼	G¼			6, 8, 10, 12		
				R⅜	G⅜			8, 10, 12		
				R½	G½			10, 12		
	Push-in L-connector									
		**QSL-V0**	–	–	–	4	–	–	–	91
						6				
						8				
						10				
						12				
T-shape	**Push-in T-fitting – Male thread with external hex**									
		**QST-V0**	–	R⅛	G⅛	–	–	4[1], 6, 8	–	92
				R¼	G¼			6, 8, 10, 12		
				R⅜	G⅜			8, 10, 12		
				R½	G½			10, 12		
	Push-in T-connector									
		**QST-V0**	–	–	–	4	–	–	–	93
						6				
						8				
						10				
						12				

1) Only in conjunction with R thread

Push-in fittings QSM, Quick Star, mini

Technical data

Push-in fitting QSM

Male thread with external hex



M thread

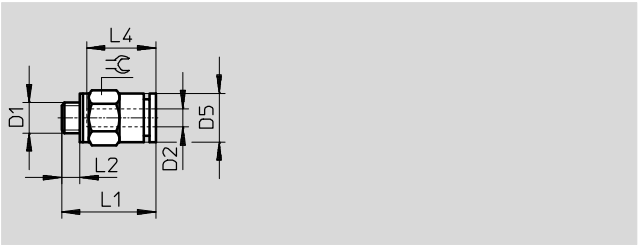



R thread

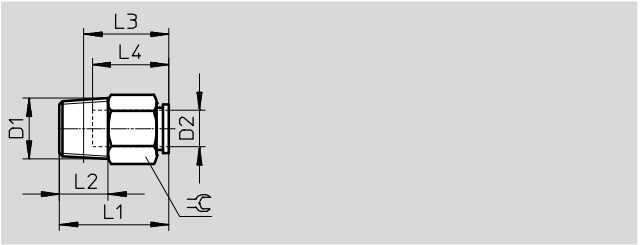



G thread

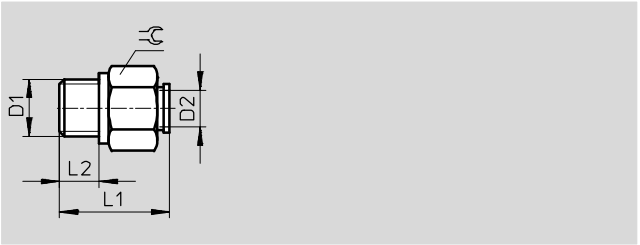

Dimensions and ordering data

Connection D1	Nominal size [mm]	Tubing O.D. D2	D5 ∅	L1	L2	L3	L4	⌀	Weight/ piece [g]	Part No.	Type	PU*
Metric thread with sealing ring												
M3	0.9	2	4.8	12.1	2.5	–	8.4	5	1	**133027**	**QSM-M3-2**	**10**
		3	7	13.3	2.5	–	9.6	5.5	1.1	**153301**	**QSM-M3-3**	**10**
										130775	**QSM-M3-3-100**	**100**
	1.1	4	9.8	15.7	2.5	–	11.5	8	2.4	**153303**	**QSM-M3-4**	**10**
										130776	**QSM-M3-4-100**	**100**
M5	1.1	2	4.8	11.8	3	–	8.4	7	2.2	**133028**	**QSM-M5-2**	**10**
	2	3	9.8	16.2	3	–	11.5	8	3.4	**153302**	**QSM-M5-3**	**10**
										130777	**QSM-M5-3-100**	**100**
	2.2	4	9.8	16.2	3	–	11.5	8	3.2	**153304**	**QSM-M5-4**	**10**
										130778	**QSM-M5-4-100**	**100**
	2.1	6	11.8	17.3	3	–	12	10	4.5	**153306**	**QSM-M5-6**	**10**
										130779	**QSM-M5-6-100**	**100**
M6	2.8	6	11.8	18	3.9	–	11.7	10	4.8	**132600**	**QSM-M6-6**	**1**
R thread												
R⅛	2.9	4	–	16	8	12	11.5	10	6	**153305**	**QSM-⅛-4**	**10**
										130755	**QSM-⅛-4-100**	**100**
	4.5	6	–	18	8	14	12	10	6	**153307**	**QSM-⅛-6**	**10**
										130756	**QSM-⅛-6-100**	**100**
G thread with sealing ring												
G⅛	2.9	4	–	16.4	5.1	–	–	13	9.4	**186264**	**QSM-G⅛-4**	**10**
	2.8	6	–	18.4	5.1	–	–	13	11	**186265**	**QSM-G⅛-6**	**10**

* Packaging unit quantity

Push-in fittings QSM, Quick Star, mini

Technical data

Push-in fitting QSM-...-I

Male thread with internal hex



M thread

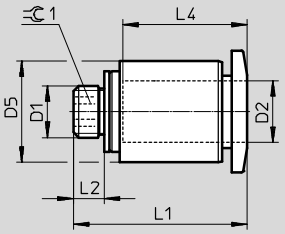

QSM-M3-2-I, QSM-M5-3-I, QSM-M5-4-I, QSM-M7-4-I, QSM-M7-6-I

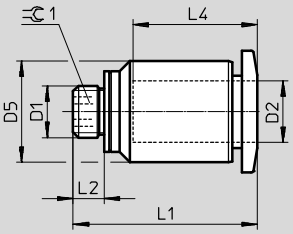

QSM-M3-3-I, QSM-M3-4-I, QSM-M5-6-I



R thread

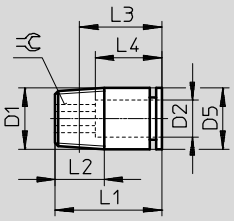



G thread

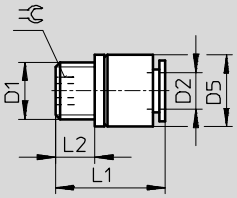

Dimensions and ordering data

Connection D1	Nominal size [mm]	Tubing O.D. D2	D5 ∅	L1	L2	L3	L4	⊂	Weight/ piece [g]	Part No.	Type	PU*
Metric thread with sealing ring												
M3	1.1	2	5	12.1	2.5	–	8.4	1.3	0.8	**133026**	**QSM-M3-2-I**	**10**
	1.6	3	8	15.7	2.5	–	11.5	1.5	2.3	**153312**	**QSM-M3-3-I**	**10**
	1.5	4	8	15.7	2.5	–	11.5	1.5	2.2	**153314**	**QSM-M3-4-I**	**10**
M5	1.9	3	8	16.2	3	–	11.5	2	3.2	**153313**	**QSM-M5-3-I**	**10**
	2.5	4	8	16.2	3	–	11.5	2.5	3	**153315**	**QSM-M5-4-I**	**10**
	2.6	6	9.8	17.8	3	–	12	2.5	4.4	**153317**	**QSM-M5-6-I**	**10**
M7	3.1	4	9.8	18.9	5.5	–	11.5	3	6	**153319**	**QSM-M7-4-I**	**10**
										133006	**QSM-M7-4-I-100**	**100**
	4.1	6	9.8	20.9	5.5	–	12	4	6.4	**153321**	**QSM-M7-6-I**	**10**
R thread												
R⅛	3.1	4	10	16.4	8	12.4	11.5	3	6.2	**153316**	**QSM-⅛-4-I**	**10**
	4.1	6	10	18.2	8	14.2	12.5	4	5.6	**153318**	**QSM-⅛-6-I**	**10**
G thread with sealing ring												
G⅛	3.1	4	13	16.4	5.1	–	–	3	8.9	**186266**	**QSM-G⅛-4-I**	**10**
	4.1	6	13	18.4	5.1	–	–	4	9.5	**186267**	**QSM-G⅛-6-I**	**10**

* Packaging unit quantity

Push-in fittings QSM, Quick Star, mini

Technical data

Push-in fitting QSM-...-I-R
Male thread with internal hex
Round release ring



M thread

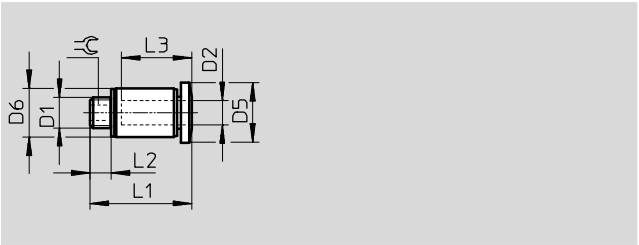

Dimensions and ordering data

Connection D1	Nominal size [mm]	Tubing O.D. D2	D5 ∅	D6 ∅	L1	L2	L3	⌀	Weight/ piece [g]	Part No.	Type	PU*
Metric thread with sealing ring, round release ring												
M3	1.6	3	6.0	5.5	13.3	2.5	9.6	1.5	2.3	**133001**	**QSM-M3-3-I-R**	**10**
										132914	**QSM-M3-3-I-R-100**	**100**
	1.5	4	7.8	8.0	15.7	2.5	11.5	1.5	2.2	**133002**	**QSM-M3-4-I-R**	**10**
										132915	**QSM-M3-4-I-R-100**	**100**
M5	1.9	3	7.8	8.0	16.2	3.0	11.5	2.0	3.2	**133003**	**QSM-M5-3-I-R**	**10**
										132916	**QSM-M5-3-I-R-100**	**100**
	2.5	4	7.8	8.0	16.2	3.0	11.5	2.5	3	**133004**	**QSM-M5-4-I-R**	**10**
										132917	**QSM-M5-4-I-R-100**	**100**
	2.6	6	9.8	9.8	17.8	3.0	12	2.5	4.4	**133005**	**QSM-M5-6-I-R**	**10**
										132918	**QSM-M5-6-I-R-100**	**100**
M7	4.1	6	9.8	9.8	20.9	5.5	12	4.0	6.4	**133007**	**QSM-M7-6-I-R**	**10**
										132919	**QSM-M7-6-I-R-100**	**100**

* Packaging unit quantity

Push-in fittings QSM, Quick Star, mini

Technical data

Push-in fitting QSMF

Female thread with external hex



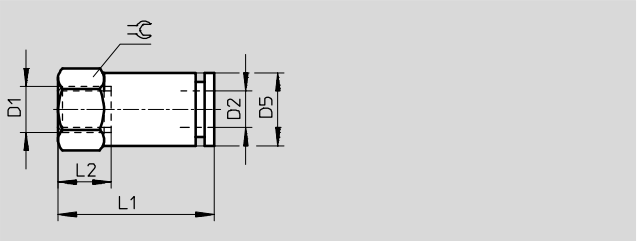

Dimensions and ordering data										
Connection D1	Nominal size [mm]	Tubing O.D. D2	D5 ∅	L1	L2	⌀	Weight/ piece [g]	Part No.	Type	PU*
Metric thread with sealing ring										
M3	1.3	3	5.5	13.9	4.4	5.5	1.6	**153308**	**QSMF-M3-3**	**10**
	2.1	4	8	16	4.5	8	4.1	**153310**	**QSMF-M3-4**	**10**
M5	1.9	3	8	15.5	4.5	8	4.3	**153309**	**QSMF-M5-3**	**10**
	1.8	4	8	18.2	4.5	8	4.5	**153311**	**QSMF-M5-4**	**10**

* Packaging unit quantity

Push-in fitting QSMP

Male thread with internal hex



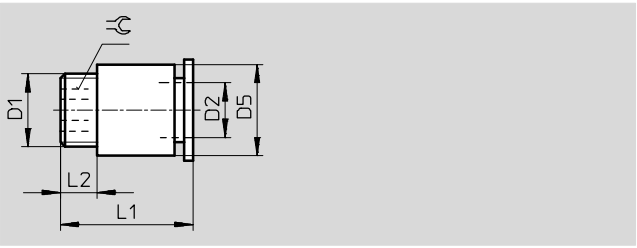

Dimensions and ordering data										
Connection D1	Nominal size [mm]	Tubing O.D. D2	D5 ∅	L1	L2	⌀	Weight/ piece [g]	Part No.	Type	PU*
Metric thread with sealing ring										
M6x0.75	2.5	4	8	14.5	3.5	2.5	3	**153320**	**QSMP-M6-4**	**10**
M8x0.75	4	6	10	15	4	4	4	**153322**	**QSMP-M8-6**	**10**

* Packaging unit quantity

Push-in fittings QSM, Quick Star, mini

Technical data

FESTO

Push-in connector QSM



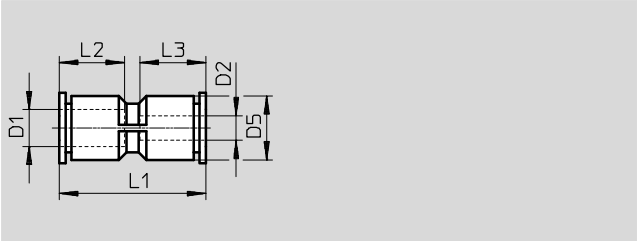

Dimensions and ordering data										
Tubing O.D. D1	Nominal size [mm]	Tubing O.D. D2	D5 ∅	L1	L2	L3	Weight/ piece [g]	Part No.	Type	PU*
3	1.9	3	6	20	9.5	9.5	1.5	**153323**	**QSM-3**	**10**
								130757	**QSM-3-100**	**100**
4	2.6	4	8	23.5	11.5	11.5	2	**153324**	**QSM-4**	**10**
								130758	**QSM-4-100**	**100**
6	3.7	6	10.5	25	12	12	4	**153325**	**QSM-6**	**10**
								130759	**QSM-6-100**	**100**
Reducing										
3	1.1	2	6	19.1	9.3	8.4	1	**133029**	**QSM-3-2**	**10**
4	1.7	3	8	23.9	11.6	11.6	2.1	**153326**	**QSM-4-3**	**10**
								130760	**QSM-4-3-100**	**100**
6	2.7	4	10.4	24.9	11.6	11.6	3	**153327**	**QSM-6-4**	**10**
								130761	**QSM-6-4-100**	**100**

* Packaging unit quantity

Push-in bulkhead connector QSMS



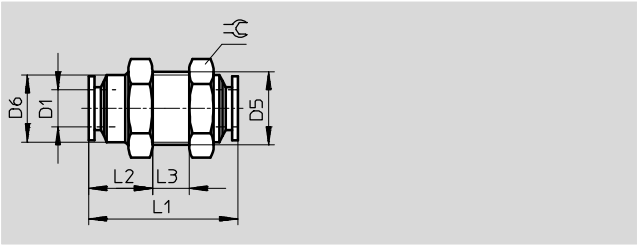

Dimensions and ordering data											
Tubing O.D. D1	Nominal size [mm]	D5	D6 ∅	L1	L2	L3 max.	⌀	Weight/ piece [g]	Part No.	Type	PU*
3	1.7	M8x0.75	7	19.5	7	7.5	10	3	**153375**	**QSMS-3**	**10**
4	2.2	M10x1	9	24	9.5	7.5	12	6	**153376**	**QSMS-4**	**10**
									130780	**QSMS-4-100**	**100**
6	3.7	M12x1	11	25	11	6	14	9	**153377**	**QSMS-6**	**10**
									130781	**QSMS-6-100**	**100**

* Packaging unit quantity

Push-in cap QSMC



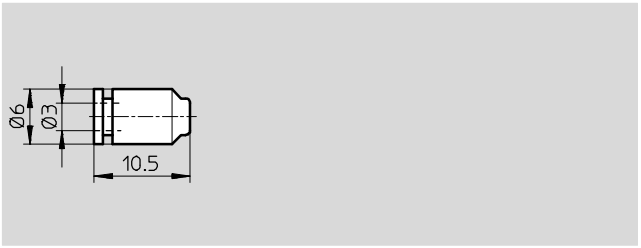

Ordering data

Tubing O.D.	Weight/piece [g]	Part No.	Type	PU*
3	0.5	**153381**	**QSMC-3**	**10**

* Packaging unit quantity

Push-in connector QSM-...H
with push-in sleeve



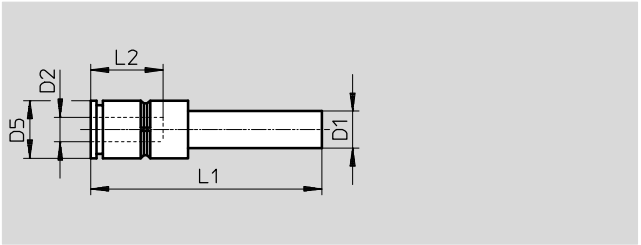

Dimensions and ordering data

Push-in sleeve ∅ D1	Nominal size [mm]	Tubing O.D. D2	D5 ∅	L1	L2	Weight/ piece [g]	Part No.	Type	PU*
3	1.1	2	6	26.3	8.4	0.6	**133035**	**QSM-3H-2**	**10**
4	1.7	3	6	27	9.5	0.8	**153328**	**QSM-4H-3**	**10**
							130762	**QSM-4H-3-100**	**100**
6	2.6	4	9	32.6	11.6	2.4	**153329**	**QSM-6H-4**	**10**
							130763	**QSM-6H-4-100**	**100**

* Packaging unit quantity

Blanking plug QSMC-...H



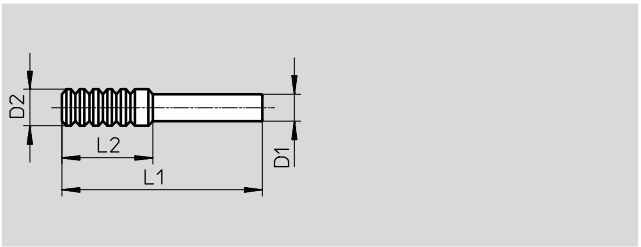

Dimensions and ordering data

Push-in sleeve ∅ D1	D2 ∅	L1	L2	Weight/ piece [g]	Part No.	Type	PU*
2	3	20	10.2	0.1	**133036**	**QSMC-2H**	**10**
3	4	22	10.2	0.2	**153382**	**QSMC-3H**	**10**

* Packaging unit quantity

Push-in fittings QSM, Quick Star, mini

Technical data

Push-in L-fitting QSML
Orientable
Male thread with external hex


M thread

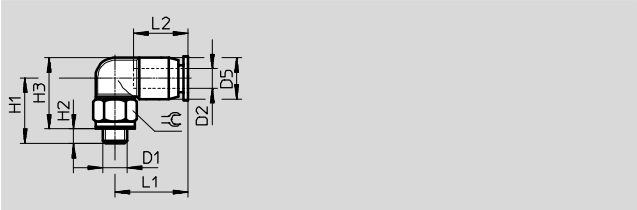


R thread

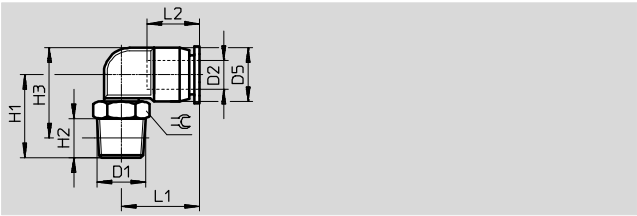


G thread

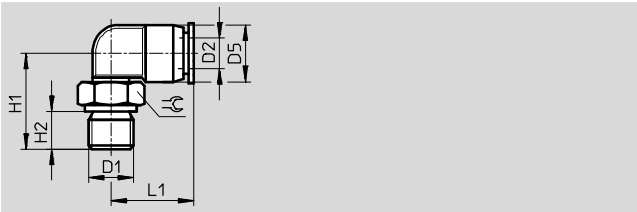

Dimensions and ordering data

Connection D1	Nominal size [mm]	Tubing O.D. D2	D5 ∅	H1	H2	H3	L1	L2	⌀	Weight/ piece [g]	Part No.	Type	PU*
Metric thread with sealing ring													
M3	0.8	2	6	12	2.5	12.5	10.3	8.4	5.5	1.4	**133030**	**QSML-M3-2**	**10**
		3	6	12	2.5	12.5	11	9.5	5.5	1.4	**153330**	**QSML-M3-3**	**10**
											130768	**QSML-M3-3-100**	**100**
	1.3	4	8	14	2.5	15.5	15.7	11.6	8	3	**153332**	**QSML-M3-4**	**10**
											130769	**QSML-M3-4-100**	**100**
M5	0.9	2	6	13.5	3	13.5	10.3	8.4	8	2.7	**133031**	**QSML-M5-2**	**10**
	1.5	3	6	13.5	3	13.5	11	9.5	8	2.8	**153331**	**QSML-M5-3**	**10**
											130770	**QSML-M5-3-100**	**100**
	1.7	4	8	13.5	3	14.5	15.7	11.6	8	3.4	**153333**	**QSML-M5-4**	**10**
											130771	**QSML-M5-4-100**	**100**
	2.1	6	10.5	14.5	3	16.8	16.3	11.9	8	4.1	**153335**	**QSML-M5-6**	**10**
											130772	**QSML-M5-6-100**	**100**
M7	2	4	8	17	5.5	15.5	15.7	11.6	10	5.6	**186352**	**QSML-M7-4**	**10**
											130773	**QSML-M7-4-100**	**100**
	2.4	6	10.5	19	5.5	18.8	16.3	11.9	10	6.2	**186353**	**QSML-M7-6**	**10**
											130774	**QSML-M7-6-100**	**100**
R thread													
R⅛	2.5	4	8.5	16	8	16.3	16	11.5	10	6	**153334**	**QSML-⅛-4**	**10**
											130764	**QSML-⅛-4-100**	**100**
	3.3	6	11	17	8	18.5	16.5	12	10	7	**153336**	**QSML-⅛-6**	**10**
											130765	**QSML-⅛-6-100**	**100**
G thread with sealing ring													
G⅛	2.5	4	8	16.5	5.1	–	15.7	–	13	9	**186268**	**QSML-G⅛-4**	**10**
											132897	**QSML-G⅛-4-100**	**100**
	3.3	6	10.5	17.5	5.1	–	16.3	–	13	9.7	**186269**	**QSML-G⅛-6**	**10**

* Packaging unit quantity

Push-in long L-fitting QSMLL
Orientable
Male thread with external hex


M thread

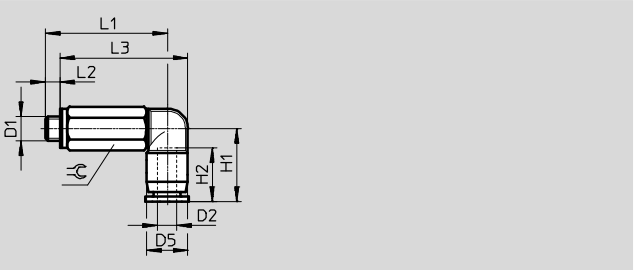


R thread

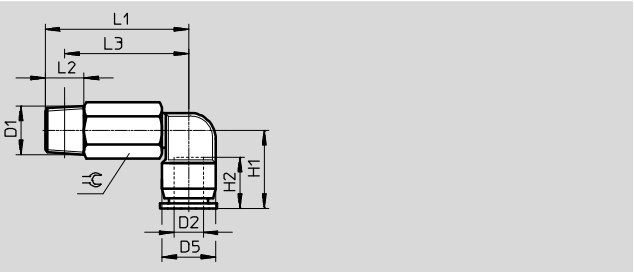


G thread

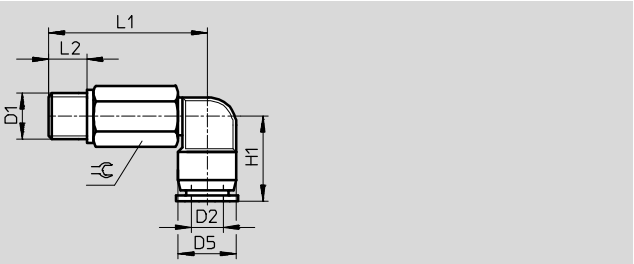

Dimensions and ordering data

Connection D1	Nominal size [mm]	Tubing O.D. D2	D5 ∅	H1	H2	L1	L2	L3	⌖	Weight/ piece [g]	Part No.	Type	PU*
Metric thread with sealing ring													
M3	0.8	2	6	10.3	8.4	19	2.5	19.5	5.5	2.7	**133032**	**QSMLL-M3-2**	**10**
	0.9	3	6	11	9.5	19	2.5	19.5	5.5	2.8	**153337**	**QSMLL-M3-3**	**10**
											133011	**QSMLL-M3-3-100**	**100**
	1.1	4	8	15.7	11.6	23	2.5	24.5	8	6.8	**153338**	**QSMLL-M3-4**	**10**
M5	0.9	2	6	10.3	8.4	25	3	25	8	7,6	**133033**	**QSMLL-M5-2**	**10**
	1.5	3	6	11	9.5	25	3	25	8	7,7	**130838**	**QSMLL-M5-3**	**10**
											133012	**QSMLL-M5-3-100**	**100**
	2	4	8	15.7	11.6	25	3	26	8	8.3	**153339**	**QSMLL-M5-4**	**10**
											133013	**QSMLL-M5-4-100**	**100**
	2	6	10.5	16.3	11.9	26	3	28.3	8	9	**153341**	**QSMLL-M5-6**	**10**
M7	2	4	8	15.7	11.6	29.5	5.5	28	10	14	**186354**	**QSMLL-M7-4**	**10**
											133014	**QSMLL-M7-4-100**	**100**
	2.4	6	10.5	16.3	11.9	31.5	5.5	31.3	10	14	**186355**	**QSMLL-M7-6**	**10**
R thread													
R⅛	2.3	4	8.5	15.5	11.5	28.5	8	22	10	13	**153340**	**QSMLL-⅛-4**	**10**
	3.1	6	11	16.5	12	29.5	8	25.5	10	14	**153342**	**QSMLL-⅛-6**	**10**
G thread with sealing ring													
G⅛	2.3	4	8	15.7	–	29	5.1	–	13	23	**186270**	**QSMLL-G⅛-4**	**10**
	3.1	6	10.5	16.3	–	30	5.1	–	13	23	**186271**	**QSMLL-G⅛-6**	**10**

* Packaging unit quantity

Push-in fittings QSM, Quick Star, mini

Technical data

Push-in L-fitting QSMLV-...-I
Orientable
Male thread with internal hex


M thread

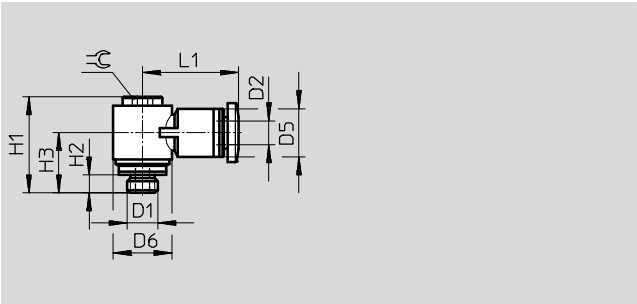

Dimensions and ordering data

Connection D1	Nominal size [mm]	Tubing O.D. D2	D5 ∅	D6 ∅	H1	H2	H3	L1	⌀	Weight/ piece [g]	Part No.	Type	PU*
Metric thread with sealing ring													
M5	1.7	3	8	9.8	16.5	3.5	10.5	16	3	5.1	**130830**	**QSMLV-M5-3-I**	**10**
	1.8	4	8	9.8	16.5	3.5	10.5	16	3	5.0	**130831**	**QSMLV-M5-4-I**	**10**
M7	1.9	4	8	9.8	18.5	5.5	12.5	16	3	5.6	**130832**	**QSMLV-M7-4-I**	**10**
	1.8	6	10.5	9.8	18.5	5.5	12.5	17.8	3	6.2	**130833**	**QSMLV-M7-6-I**	**10**

* Packaging unit quantity

Push-in long L-fitting QSMLLV-...-I
Orientable
Male thread with internal hex


M thread

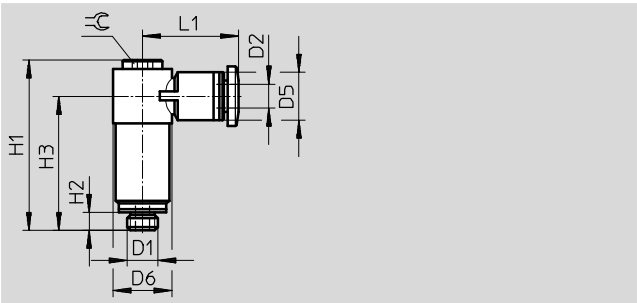

Dimensions and ordering data

Connection D1	Nominal size [mm]	Tubing O.D. D2	D5 ∅	D6 ∅	H1	H2	H3	L1	⌀	Weight/ piece [g]	Part No.	Type	PU*
Metric thread with sealing ring													
M5	1.6	3	8	9.8	28.3	3.5	22.3	16	3	10.9	**130834**	**QSMLLV-M5-3-I**	**10**
	1.8	4	8	9.8	28.3	3.5	22.3	16	3	10.9	**130835**	**QSMLLV-M5-4-I**	**10**
M7	1.9	4	8	9.8	30.3	5.5	24.3	16	3	11.8	**130836**	**QSMLLV-M7-4-I**	**10**
	1.9	6	10.5	9.8	30.3	5.5	24.3	17.8	3	12.4	**130837**	**QSMLLV-M7-6-I**	**10**

* Packaging unit quantity

Push-in L-connector QSML



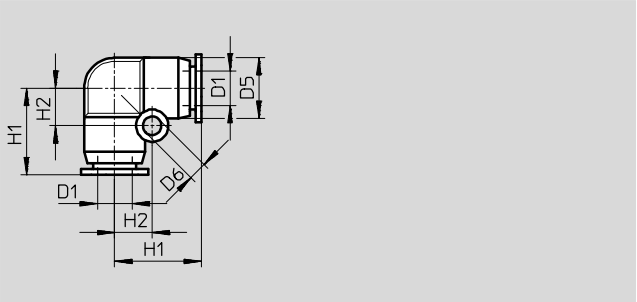

Dimensions and ordering data

Tubing O.D. D1	Nominal size [mm]	D5 ∅	D6 ∅	H1	H2	Weight/ piece [g]	Part No.	Type	PU*
3	1.7	6	3.2	11	4.5	1.5	**153343**	**QSML-3**	**10**
4	2.5	8	3.2	13.5	5.5	2	**153344**	**QSML-4**	**10**
							130766	**QSML-4-100**	**100**
6	3.4	10.5	3.2	15.5	6.5	4	**153345**	**QSML-6**	**10**
							130767	**QSML-6-100**	**100**

* Packaging unit quantity

Push-in L-connector QSML-...H
with push-in sleeve



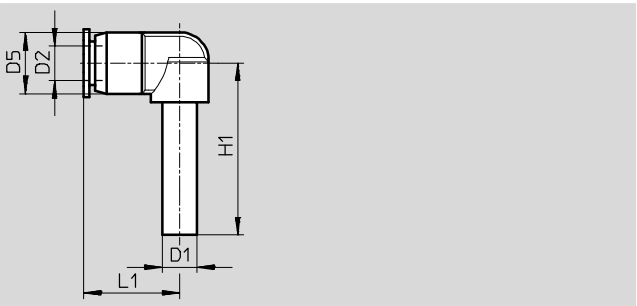

Dimensions and ordering data

Push-in sleeve ∅ D1	Nominal size [mm]	Tubing O.D. D2	D5 ∅	H1	L1	Weight/ piece [g]	Part No.	Type	PU*
3	1.2	3	9	24	14.7	1.7	**153346**	**QSML-3H**	**10**
4	1.9	4	9	25	14.7	1.7	**153347**	**QSML-4H**	**10**
6	3.2	6	10.5	26.5	17.3	2.4	**153348**	**QSML-6H**	**10**
Reducing									
4	1.7	3	9	25	14.7	1.7	**153349**	**QSML-4H-3**	**10**
6	1.9	4	9	26	14.7	1.9	**153350**	**QSML-6H-4**	**10**

* Packaging unit quantity

Push-in T-fitting QSMT
Orientable
Male thread with external hex


M thread

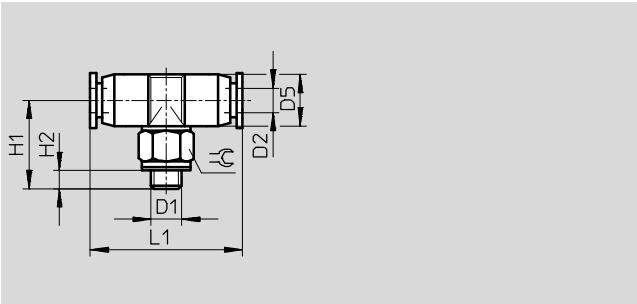


R thread

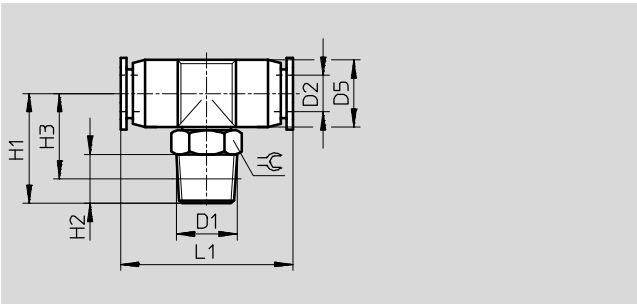


G thread

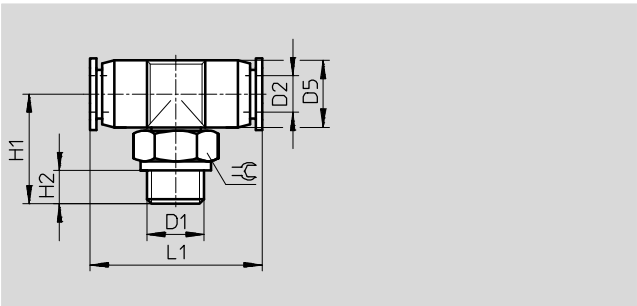

Dimensions and ordering data

Connection D1	Nominal size [mm]	Tubing O.D. D2	D5 ∅	H1	H2	H3	L1	⌀	Weight/ piece [g]	Part No.	Type	PU*
Metric thread with sealing ring												
M3	0.9	3	6	12.8	3.3	–	22	5.5	2	**153351**	**QSMT-M3-3**	**10**
	1.3	4	8	15.8	3.3	–	26.2	8	4	**153353**	**QSMT-M3-4**	**10**
M5	1.6	3	6	14	3.5	–	22	8	3.3	**153352**	**QSMT-M5-3**	**10**
	2.2	4	8	15	3.5	–	26.2	8	4.4	**153354**	**QSMT-M5-4**	**10**
										130784	**QSMT-M5-4-100**	**100**
	2.1	6	10.5	16	3.5	–	28.4	8	5.6	**153356**	**QSMT-M5-6**	**10**
										130785	**QSMT-M5-6-100**	**100**
R thread												
R⅛	2.4	4	8.5	17	8	13	27	10	7	**153355**	**QSMT-⅛-4**	**10**
	3.3	6	11	18	8	14	30	10	8	**153357**	**QSMT-⅛-6**	**10**
G thread with sealing ring												
G⅛	2.4	4	8	17.5	5.1	–	26.2	13	10	**186272**	**QSMT-G⅛-4**	**10**
	3.3	6	10.5	18.5	5.1	–	28.4	13	12	**186273**	**QSMT-G⅛-6**	**10**

* Packaging unit quantity

Push-in T-fitting QSMTL
Orientable
Male thread with external hex


M thread

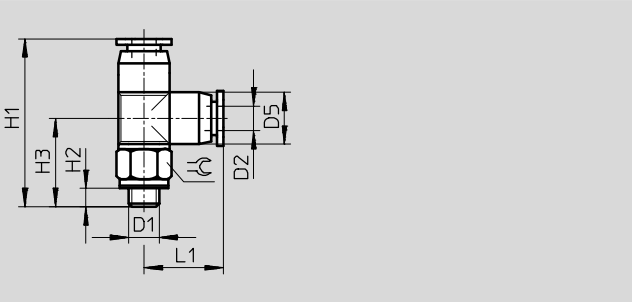


R thread

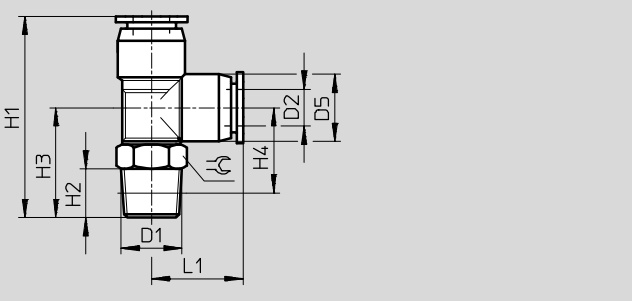


G thread

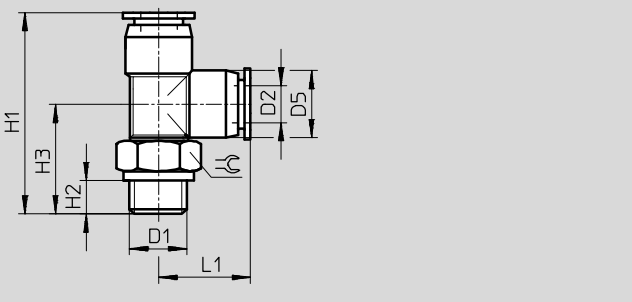

Dimensions and ordering data

Connection D1	Nominal size [mm]	Tubing O.D. D2	D5 ∅	H1	H2	H3	H4	L1	⌀	Weight/ piece [g]	Part No.	Type	PU*
Metric thread with sealing ring													
M3	0.9	3	6	23.8	3.3	12.8	–	11	5.5	2	**153358**	**QSMTL-M3-3**	**10**
	1.1	4	8	29.5	3.3	15.8	–	13.7	8	4	**153360**	**QSMTL-M3-4**	**10**
M5	1.7	3	6	25	3.5	14	–	11	8	3.3	**153359**	**QSMTL-M5-3**	**10**
	1.6	4	8	28.7	3.5	15	–	13.7	8	4.4	**153361**	**QSMTL-M5-4**	**10**
	1.7	6	10.5	31.3	3.5	16	–	15.3	8	5.7	**153363**	**QSMTL-M5-6**	**10**
R thread													
R⅛	2.4	4	8.5	30	8	17	13	13	10	7	**153362**	**QSMTL-⅛-4**	**10**
	3.3	6	10.5	33	8	18	14	15	10	8.5	**153364**	**QSMTL-⅛-6**	**10**
G thread with sealing ring													
G⅛	2.4	4	8	31.2	5.1	17.5	–	13.7	13	10	**186274**	**QSMTL-G⅛-4**	**10**
	3.3	6	10.5	33.8	5.1	18.5	–	15.3	13	12	**186275**	**QSMTL-G⅛-6**	**10**

* Packaging unit quantity

Push-in fittings QSM, Quick Star, mini

Technical data

Push-in T-connector QSMT



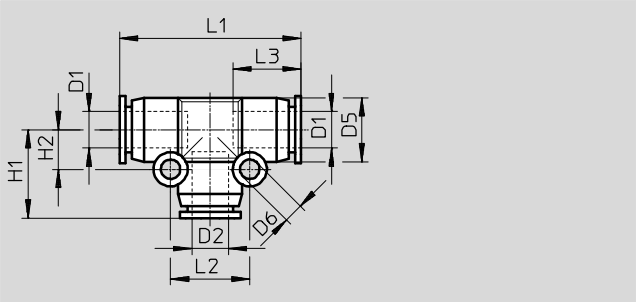

Dimensions and ordering data

Tubing O.D. D1	Nominal size [mm]	Tubing O.D. D2	D5 ∅	D6 ∅	H1	H2	L1	L2	L3	Weight/ piece [g]	Part No.	Type	PU*
2	0.9	2	6	3.2	10.3	4.5	20.5	9	8.4	1.6	**133034**	**QSMT-2**	**10**
3	1.6	3	6	3.2	11	4.5	22	9	9.5	1.7	**153365**	**QSMT-3**	**10**
4	2.4	4	8	3.2	13.7	5.6	27.3	11.2	11.6	3.3	**153366**	**QSMT-4**	**10**
											130782	**QSMT-4-100**	**100**
6	3.4	6	10.5	3.2	15.3	6.6	30.5	13.2	11.9	5.3	**153367**	**QSMT-6**	**10**
											130783	**QSMT-6-100**	**100**
Reducing													
4	1.7	3	8	3.2	13	5.5	27	11	11.5	3.5	**153368**	**QSMT-4-3**	**10**
6	2.6	4	10.5	3.2	15	6.5	30	13	12	4	**153369**	**QSMT-6-4**	**10**

* Packaging unit quantity

Push-in X-connector QSMX



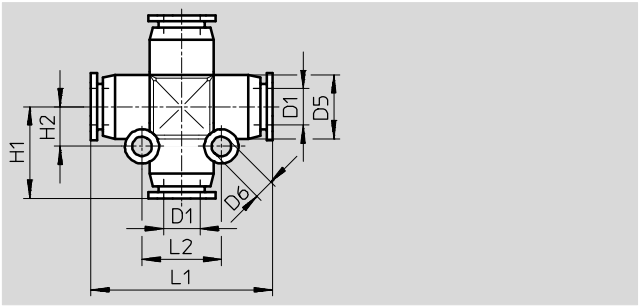

Dimensions and ordering data

Tubing O.D. D1	Nominal size [mm]	D5 ∅	D6 ∅	H1	H2	L1	L2	Weight/ piece [g]	Part No.	Type	PU*
3	1.7	8	3.2	13.5	5.5	27	11	4	**153378**	**QSMX-3**	**10**
4	2.5	8	3.2	13.5	5.5	27	11	4	**153379**	**QSMX-4**	**10**
6	3.3	10.5	3.2	15.5	6.5	31	13	5	**153380**	**QSMX-6**	**10**

* Packaging unit quantity

Push-in Y-connector QSMY



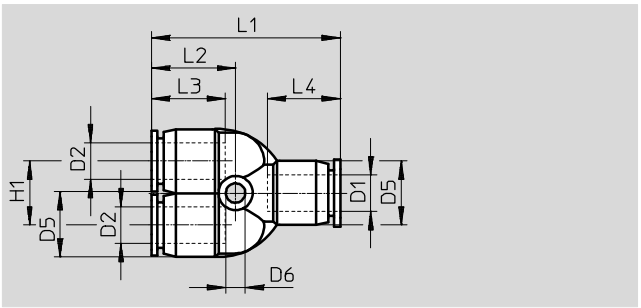

Dimensions and ordering data

Tubing O.D. D1	Nominal size [mm]	Tubing O.D. D2	D5 ∅	D6 ∅	H1	L1	L2	L3	L4	Weight/ piece [g]	Part No.	Type	PU*
2	0.9	2	6	3.2	6.5	19.5	11.8	8.4	8.4	1.7	**133037**	**QSMY-2**	**10**
3	1.6	3	8	3.2	8	28.8	13.2	11.6	11.6	3.7	**153370**	**QSMY-3**	**10**
4	1.7	4	8	3.2	8	28.8	13.2	11.6	11.6	3.5	**153371**	**QSMY-4**	**10**
											130786	**QSMY-4-100**	**100**
6	2.9	6	10.5	3.2	10.5	31.6	14.3	11.9	11.9	5.5	**153372**	**QSMY-6**	**10**
											130787	**QSMY-6-100**	**100**
Reducing													
4	1.6	3	8	3.2	8	28.8	13.2	11.6	11.6	3.6	**153373**	**QSMY-4-3**	**10**
6	2.3	4	10.5	3.2	10.5	31.5	14.2	11.6	11.9	5.3	**153374**	**QSMY-6-4**	**10**

* Packaging unit quantity

Push-in fittings QS, Quick Star

Technical data

Push-in fitting QS

Male thread with external hex



R thread

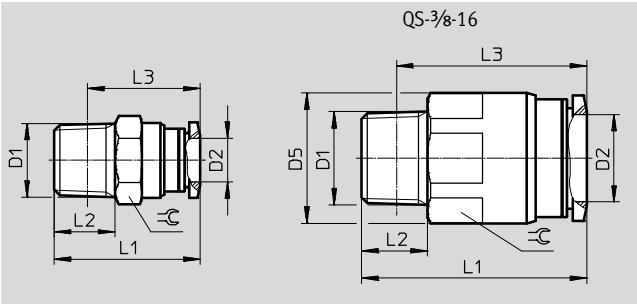

Dimensions and ordering data

Connection D1	Nominal size [mm]	Tubing O.D. D2	D5	L1	L2	L3	⌀	Weight/ piece [g]	Part No.	Type	PU*
R thread											
R1/8	3	4	–	21	8	17	10	7.4	**153001**	**QS-1/8-4**	**10**
									130674	**QS-1/8-4-100**	**100**
	5	6	–	22.3	8	18.3	12	8.2	**153002**	**QS-1/8-6**	**10**
									130675	**QS-1/8-6-100**	**100**
	6	8	–	27.9	8	23.9	14	14	**153004**	**QS-1/8-8**	**10**
									130676	**QS-1/8-8-50**	**50**
	6	10	–	30.3	8	26.3	17	21	**190643**	**QS-1/8-10**	**10**
R1/4	3	4	–	22.5	11	16.5	14	16	**190644**	**QS-1/4-4**	**10**
	5	6	–	23.7	11	17.6	14	15	**153003**	**QS-1/4-6**	**10**
									130677	**QS-1/4-6-100**	**100**
	7	8	–	26.6	11	20.6	14	14	**153005**	**QS-1/4-8**	**10**
									130678	**QS-1/4-8-50**	**50**
	8.5	10	–	29.8	11	23.8	17	19	**153007**	**QS-1/4-10**	**10**
									130679	**QS-1/4-10-50**	**50**
	8.5	12	–	35.9	11	29.9	21	37	**164980**	**QS-1/4-12**	**10**
									130680	**QS-1/4-12-20**	**20**
R3/8	5	6	–	24.5	12	18.1	17	28	**190645**	**QS-3/8-6**	**10**
	7	8	–	25.5	12	19.2	17	25	**153006**	**QS-3/8-8**	**10**
									130681	**QS-3/8-8-50**	**50**
	9	10	–	29.3	12	23	17	24	**153008**	**QS-3/8-10**	**10**
									130682	**QS-3/8-10-50**	**50**
	11	12	–	31.9	12	25.6	21	30	**153009**	**QS-3/8-12**	**10**
									130683	**QS-3/8-12-20**	**20**
	11	16	23.8	41,1	12	34.8	22	50	**164957**	**QS-3/8-16**	**1**
R1/2	9	10	–	30.4	15	22.2	21	46	**190646**	**QS-1/2-10**	**1**
	11	12	–	33.9	15	25.7	21	44	**153010**	**QS-1/2-12**	**1**
									130684	**QS-1/2-12-20**	**20**
	13	16	–	41.3	15	33.1	24	63	**153011**	**QS-1/2-16**	**1**
									130685	**QS-1/2-16-20**	**20**

* Packaging unit quantity

Push-in fitting QS
Male thread with external hex


G thread

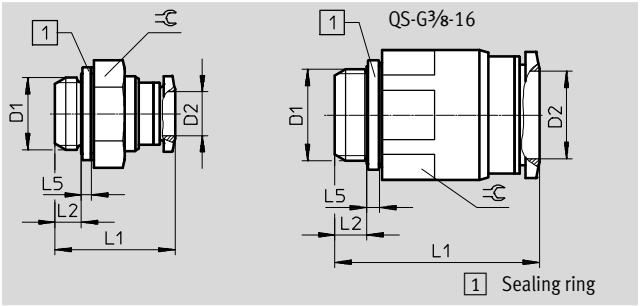

Dimensions and ordering data

Connection D1	Nominal size [mm]	Tubing O.D. D2	L1	L2	L5	⌀	Weight/piece [g]	Part No.	Type	PU*
G thread with sealing ring										
G1/8	3	4	19.5	4.2	1.9	13	9.1	**186095**	**QS-G1/8-4**	**10**
								132036	**QS-G1/8-4-100**	**100**
	5	6	20.6	4.2	1.9	13	8.3	**186096**	**QS-G1/8-6**	**10**
								132037	**QS-G1/8-6-100**	**100**
	6	8	25.8	4.2	1.9	14	13	**186098**	**QS-G1/8-8**	**10**
								132038	**QS-G1/8-8-50**	**50**
G1/4	5	6	21.2	4.8	1.9	17	17	**186097**	**QS-G1/4-6**	**10**
								132039	**QS-G1/4-6-100**	**100**
	7	8	21.9	4.8	1.9	17	15	**186099**	**QS-G1/4-8**	**10**
								132040	**QS-G1/4-8-50**	**50**
	8.5	10	28.9	4.8	1.9	17	21	**186101**	**QS-G1/4-10**	**10**
								132041	**QS-G1/4-10-50**	**50**
	8.5	12	34.1	4.8	1.9	21	39	**186350**	**QS-G1/4-12**	**10**
								132042	**QS-G1/4-12-20**	**20**
G3/8	7	8	21.7	5.8	2.4	19	22	**186100**	**QS-G3/8-8**	**10**
								132043	**QS-G3/8-8-50**	**50**
	9	10	25.4	5.8	2.4	19	22	**186102**	**QS-G3/8-10**	**10**
								132044	**QS-G3/8-10-50**	**50**
	11	12	31.5	5.8	2.4	21	33	**186103**	**QS-G3/8-12**	**10**
								132045	**QS-G3/8-12-20**	**20**
	11	16	37.3	5.8	2.4	22	45	**186347**	**QS-G3/8-16**	**1**
G1/2	11	12	28	6.8	2.4	24	39	**186104**	**QS-G1/2-12**	**1**
								132046	**QS-G1/2-12-20**	**20**
	13	16	35.3	6.8	2.4	24	51	**186105**	**QS-G1/2-16**	**1**
								132047	**QS-G1/2-16-20**	**20**

* Packaging unit quantity

Push-in fittings QS, Quick Star

Technical data

Push-in fitting QS-G¾-22
Male thread with external hex


G thread

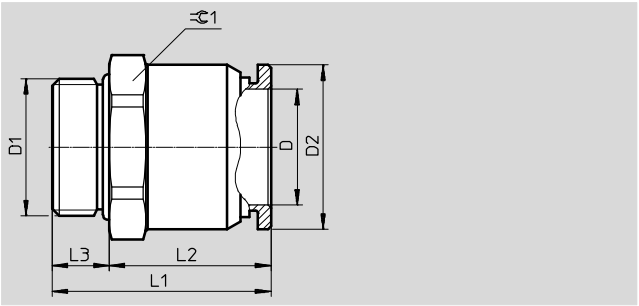

Dimensions and ordering data

Connection D1	Nominal size [mm]	Tubing O.D. D	D2 ∅	L1	L2	L3	⊂1	Weight/ piece [g]	Part No.	Type	PU*
G thread with sealing ring											
G¾	20	22	31.6	42.1	31.1	11	32	93.2	**8040613**	**QS-G¾-22**	**1**

* Packaging unit quantity

Push-in fitting QS-...-I

Male thread with internal hex



R thread

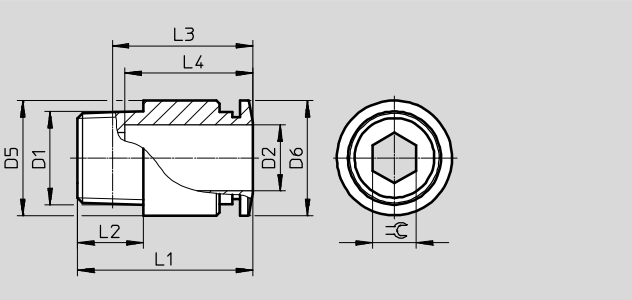



G thread

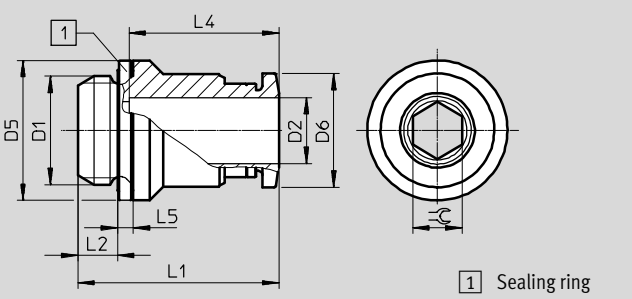

Dimensions and ordering data

Connection D1	Nominal size [mm]	Tubing O.D. D2	D5 ∅	D6 ∅	L1	L2	L3	L4	L5	⌀	Weight/piece [g]	Part No.	Type	PU*
R thread														
R⅛	2.6	4	9.7	9.9	20	8	16	14.9	–	2.5	6.6	**153012**	**QS-⅛-4-I**	**10**
	4.2	6	11.8	11.8	22.1	8	18.1	17	–	4	7.6	**153013**	**QS-⅛-6-I**	**10**
	5.3	8	13.7	13.8	25.9	8	21.9	18.2	–	5	8.8	**153015**	**QS-⅛-8-I**	**10**
	5.3	10	17.5	16.8	30.3	8	26.3	20.7	–	5	17	**190647**	**QS-⅛-10-I**	**10**
R¼	4.2	6	13.7	11.8	21.3	11	15.2	17	–	4	13	**153014**	**QS-¼-6-I**	**10**
	6.3	8	13.7	13.8	25.1	11	19.1	18.2	–	6	13	**153016**	**QS-¼-8-I**	**10**
	6.3	10	17.5	16.8	29.8	11	23.8	20.7	–	6	20	**153018**	**QS-¼-10-I**	**10**
	6.3	12	20.8	19.8	35.9	11	29.9	23.3	–	6	29	**190649**	**QS-¼-12-I**	**10**
R⅜	6.3	8	16.8	13.8	22.2	12	15.9	18.2	–	6	19	**153017**	**QS-⅜-8-I**	**10**
	6.3	10	17.5	16.8	29.3	12	23	20.7	–	6	26	**153019**	**QS-⅜-10-I**	**10**
	8.4	12	20.8	19.8	31.9	12	25.6	23.3	–	8	31	**153020**	**QS-⅜-12-I**	**10**
R½	6.3	10	20.8	16.8	30.3	15	22.1	20.7	–	6	45	**190648**	**QS-½-10-I**	**1**
	8.4	12	20.8	19.8	33.9	15	25.7	23.3	–	8	45	**153021**	**QS-½-12-I**	**1**
G thread with sealing ring														
G⅛	2.6	4	13	9.9	19.5	4.2	–	14.9	1.9	2.5	7.7	**186106**	**QS-G⅛-4-I**	**10**
												133008	**QS-G⅛-4-I-100**	**100**
	4.2	6	13	11.8	21.6	4.2	–	17	1.9	4	8.3	**186107**	**QS-G⅛-6-I**	**10**
												133009	**QS-G⅛-6-I-100**	**100**
	5.3	8	13.7	13.8	25.8	4.2	–	18.2	1.9	5	12	**186109**	**QS-G⅛-8-I**	**10**
												133010	**QS-G⅛-8-I-100**	**100**
	5.3	10	17	16.8	28.3	4.2	–	20.7	1.9	5	19	**132999**	**QS-G⅛-10-I**	**10**
												133000	**QS-G⅛-10-I-100**	**100**
G¼	4.2	6	17	11.8	20.2	4.8	–	17	1.9	4	13	**186108**	**QS-G¼-6-I**	**10**
	6.3	8	17	13.8	24.4	4.8	–	18.2	1.9	6	14	**186110**	**QS-G¼-8-I**	**10**
	7.3	10	17	16.8	28.9	4.8	–	20.7	1.9	7	20	**186112**	**QS-G¼-10-I**	**10**
G⅜	6.3	8	19	13.8	23.9	5.8	–	18.2	2.4	6	20	**186111**	**QS-G⅜-8-I**	**10**
	7.3	10	19	16.8	26.4	5.8	–	20.7	2.4	7	22	**186113**	**QS-G⅜-10-I**	**10**
	8.4	12	20.8	19.8	31.5	5.8	–	23.3	2.4	8	34	**186114**	**QS-G⅜-12-I**	**10**
G½	8.4	12	24	19.8	28	6.8	–	23.3	2.4	8	33	**186115**	**QS-G½-12-I**	**1**

* Packaging unit quantity

Push-in fitting QSF
Female thread with external hex



G thread

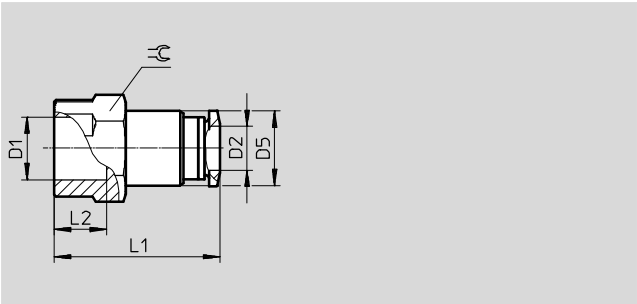

Dimensions and ordering data

Connection D1	Nominal size [mm]	Tubing O.D. D2	D5 ∅	L1	L2	⫧	Weight/piece [g]	Part No.	Type	PU*
G thread										
G⅛	3	4	9.7	23.9	7	14	13	**153022**	**QSF-⅛-4-B**	**10**
								130709	**QSF-⅛-4-B-100**	**100**
	5	6	11.8	26	7	14	15	**153023**	**QSF-⅛-6-B**	**10**
								130710	**QSF-⅛-6-B-100**	**100**
	7	8	13.7	27.2	7	14	16	**153025**	**QSF-⅛-8-B**	**10**
								130711	**QSF-⅛-8-B-50**	**50**
G¼	3	4	9.7	26.9	9.5	17	21	**190650**	**QSF-¼-4-B**	**10**
	5	6	11.8	29	9.5	17	23	**153024**	**QSF-¼-6-B**	**10**
								130712	**QSF-¼-6-B-100**	**100**
	7	8	13.7	30.2	9.5	17	24	**153026**	**QSF-¼-8-B**	**10**
								130713	**QSF-¼-8-B-50**	**50**
	9	10	17.5	32.7	9.5	17	30	**153028**	**QSF-¼-10-B**	**10**
								130714	**QSF-¼-10-B-50**	**50**
	11	12	20.8	34.8	9.5	21	44	**190651**	**QSF-¼-12-B**	**10**
G⅜	5	6	11.8	30.5	11	21	30	**190652**	**QSF-⅜-6-B**	**10**
	7	8	13.7	31.7	11	21	32	**153027**	**QSF-⅜-8-B**	**10**
								130715	**QSF-⅜-8-B-50**	**50**
	9	10	17.5	34.2	11	21	38	**153029**	**QSF-⅜-10-B**	**10**
								130716	**QSF-⅜-10-B-50**	**50**
	11	12	20.8	36.8	11	21	46	**153030**	**QSF-⅜-12-B**	**10**
								130717	**QSF-⅜-12-B-20**	**20**
G½	11	12	20.8	40.1	14	24	56	**190653**	**QSF-½-12-B**	**1**
	15	16	25	41.6	14	25	69	**190654**	**QSF-½-16-B**	**1**

* Packaging unit quantity

Push-in connector QS



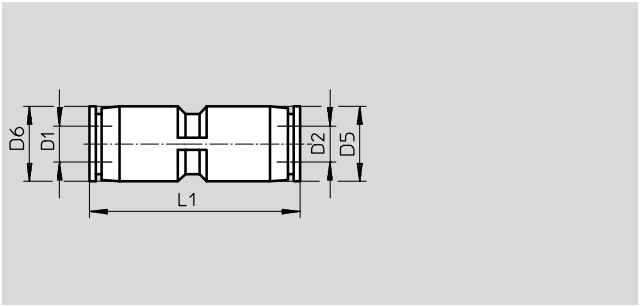

Dimensions and ordering data

Tubing O.D. D1	Nominal size [mm]	Tubing O.D. D2	D5 ∅	D6	L1	Weight/piece [g]	Part No.	Type	PU*
4	2.6	4	10	–	31	5	**153031**	**QS-4**	**10**
							130686	**QS-4-100**	**100**
6	4	6	12.5	–	35	6.5	**153032**	**QS-6**	**10**
							130687	**QS-6-100**	**100**
8	5	8	14.5	–	38	9.5	**153033**	**QS-8**	**10**
							130688	**QS-8-50**	**50**
10	6.7	10	17.5	–	44	16	**153034**	**QS-10**	**10**
							130689	**QS-10-50**	**50**
12	8.7	12	21	–	48	22	**153035**	**QS-12**	**10**
							130690	**QS-12-20**	**20**
16	13.7	16	25	–	50	25	**153036**	**QS-16**	**1**
Reducing									
6	2.6	4	12.5	12.5	34.4	6.4	**153037**	**QS-6-4**	**10**
							130691	**QS-6-4-100**	**100**
8	2.3	4	10.7	14.5	36.6	7.2	**130606**	**QS-8-4**	**10**
	4	6	14.5	14.5	37.9	8.8	**153038**	**QS-8-6**	**10**
							130692	**QS-8-6-50**	**50**
10	3.7	6	13	17.5	39.8	12	**130607**	**QS-10-6**	**10**
	5	8	17.5	17.5	43.1	14	**153039**	**QS-10-8**	**10**
							130693	**QS-10-8-50**	**50**
12	5.2	8	14.5	21	44	16	**130608**	**QS-12-8**	**10**
	6.7	10	21	21	47.6	21	**153040**	**QS-12-10**	**10**
							130694	**QS-12-10-20**	**20**

* Packaging unit quantity

Push-in bulkhead connector QSS



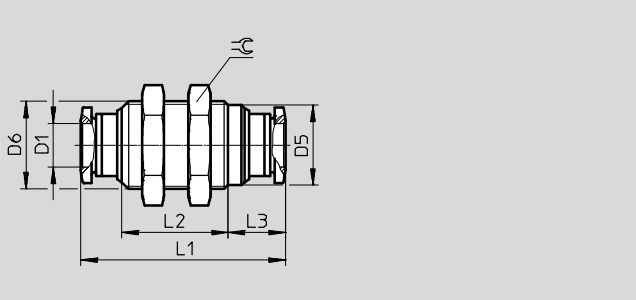

Push-in bulkhead connector QSS-...-F
with fixed collar



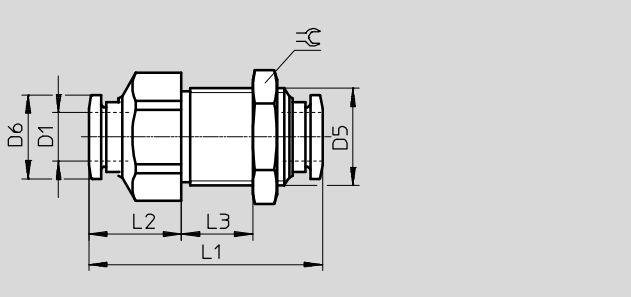

Dimensions and ordering data

Tubing O.D. D1	Nominal size [mm]	D5	D6 ∅	L1	L2	L3	⫧	Weight/ piece [g]	Part No.	Type	PU*
4	3	M12x1	10.8	30.8	14.8	9.5	14	11	**153157**	**QSS-4**	**10**
									130788	**QSS-4-100**	**100**
6	5	M14x1	12.5	34.9	19	9.5	17	16	**153158**	**QSS-6**	**10**
									130789	**QSS-6-100**	**100**
8	7	M16x1	14.6	37.4	19.4	10.5	19	19	**153159**	**QSS-8**	**10**
									130790	**QSS-8-50**	**50**
10	9	M20x1	18.5	42.4	21.6	11.9	24	35	**153160**	**QSS-10**	**10**
									130791	**QSS-10-50**	**50**
12	11	M22x1	20.4	47.6	24.2	13.2	27	52	**153161**	**QSS-12**	**10**
									130792	**QSS-12-20**	**20**
With fixed collar											
4	2.6	M12x1	9.9	33	13	10	14	–	**193950**	**QSS-4-F**	**10**
6	4.0	M14x1	11.8	34.9	14.4	10	17	–	**193951**	**QSS-6-F**	**10**
8	5.5	M16x1	13.8	38.4	15.2	13	19	40	**130642**	**QSS-8-F**	**10**
10	6.5	M20x1	16.8	47.1	20.3	15	24	86	**130643**	**QSS-10-F**	**10**
12	7.5	M22x1	19.8	48.5	18.9	17.5	27	105	**130644**	**QSS-12-F**	**10**

* Packaging unit quantity

Push-in bulkhead connector QSSF
with female thread



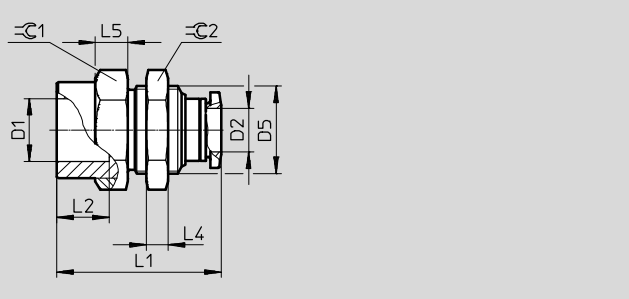

Dimensions and ordering data

Connection D1	Nominal size [mm]	Tubing O.D. D2	D5 ∅	L1	L2	L4	L5	⌀ 1	⌀ 2	Weight/ piece [g]	Part No.	Type	PU*
G1/8	3	4	M12x1	24.2	7	4	5	14	14	17	**153162**	**QSSF-1/8-4-B**	**10**
	5	6	M14x1	26.4	7	4	6	17	17	25	**153163**	**QSSF-1/8-6-B**	**10**
	7	8	M16x1	27	7	4	6	19	19	30	**153165**	**QSSF-1/8-8-B**	**10**
G1/4	3	4	M12x1	27.5	9.5	4	6	17	14	24	**190655**	**QSSF-1/4-4-B**	**10**
	5	6	M14x1	28.7	9.5	4	6	17	17	27	**153164**	**QSSF-1/4-6-B**	**10**
	7	8	M16x1	30	9.5	4	6	19	19	34	**153166**	**QSSF-1/4-8-B**	**10**
	9	10	M20x1	32.7	9.5	5	7	24	24	57	**153168**	**QSSF-1/4-10-B**	**10**
G3/8	5	6	M14x1	30.9	11	4	6.5	21	17	36	**190656**	**QSSF-3/8-6-B**	**10**
	7	8	M16x1	31.5	11	4	6.5	21	19	38	**153167**	**QSSF-3/8-8-B**	**10**
	9	10	M20x1	34.2	11	5	7	24	24	57	**153169**	**QSSF-3/8-10-B**	**10**
	11	12	M22x1	36.8	11	6	7	24	27	66	**153170**	**QSSF-3/8-12-B**	**10**
G1/2	11	12	M22x1	40.1	14	6	7	24	27	70	**153171**	**QSSF-1/2-12-B**	**1**
	15	16	M27x1.5	42.6	14	9	8.5	29	32	116	**190657**	**QSSF-1/2-16-B**	**1**

* Packaging unit quantity

Push-in cap QSC



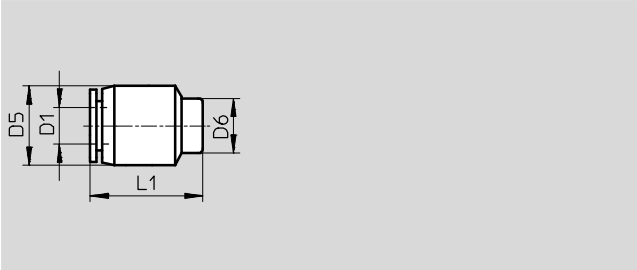

Dimensions and ordering data							
Tubing O.D. D1	D5 ∅	D6 ∅	L1	Weight/piece [g]	Part No.	Type	PU*
4	10	7	16.5	2.5	**153262**	**QSC-4**	**10**
					130704	**QSC-4-100**	**100**
6	13	9	18.5	3.5	**153263**	**QSC-6**	**10**
					130705	**QSC-6-100**	**100**
8	15	11	20	5	**153264**	**QSC-8**	**10**
					130706	**QSC-8-50**	**50**
10	18	13	22.5	8	**153265**	**QSC-10**	**10**
					130707	**QSC-10-50**	**50**
12	21.5	16	23	11.5	**153266**	**QSC-12**	**10**
					130708	**QSC-12-20**	**20**

* Packaging unit quantity

Push-in connector QS-...H
with push-in sleeve



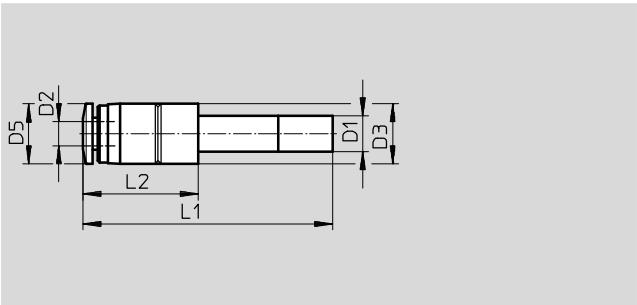

Dimensions and ordering data										
Push-in sleeve ∅ D1	Nominal size [mm]	Tubing O.D. D2	D3 ∅	D5 ∅	L1	L2	Weight/piece [g]	Part No.	Type	PU*
6	2.5	4	10	9.9	37.7	15.2	2.9	**153041**	**QS-6H-4**	**10**
								130695	**QS-6H-4-100**	**100**
8	2.4	4	12.5	9.9	40.2	16.7	3.8	**130622**	**QS-8H-4**	**10**
8	3.8	6	12.5	11.8	40.8	17.3	4	**153042**	**QS-8H-6**	**10**
								130696	**QS-8H-6-50**	**50**
10	3.8	6	12.5	11.8	43.8	18.8	4.5	**130623**	**QS-10H-6**	**10**
10	5.4	8	14.5	13.8	43.7	18.7	5.8	**153043**	**QS-10H-8**	**10**
								130697	**QS-10H-8-50**	**50**
12	3.8	6	14.5	11.8	48.8	19.8	6.0	**132981**	**QS-12H-6**	**10**
12	5.4	8	14.5	13.8	49.7	20.7	6.7	**130624**	**QS-12H-8**	**10**
12	6.3	10	17.5	16.8	50	21	9.6	**153044**	**QS-12H-10**	**10**
								130698	**QS-12H-10-20**	**20**

* Packaging unit quantity

Push-in sleeve QSH



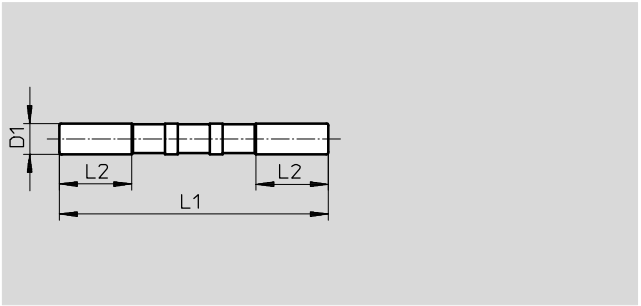



Reducing

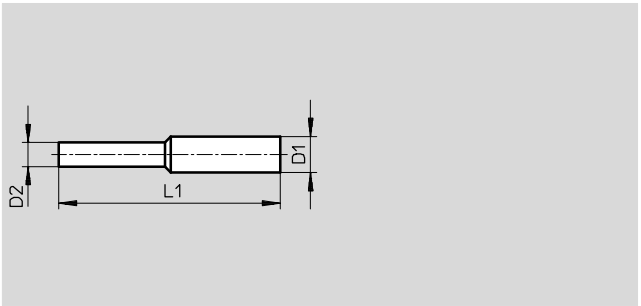

Dimensions and ordering data

Push-in sleeve ∅ D1	Nominal size [mm]	Push-in sleeve ∅ D2	L1	L2	Weight/piece [g]	Part No.	Type	PU*
4	2.5	–	34.8	11.3	0.5	**153251**	**QSH-4**	**10**
						130723	**QSH-4-100**	**100**
6	4	–	38.2	11.3	0.5	**153252**	**QSH-6**	**10**
						130724	**QSH-6-100**	**100**
8	6	–	41.4	12.1	1	**153253**	**QSH-8**	**10**
						130725	**QSH-8-50**	**50**
10	7.5	–	46.2	13	1.5	**153254**	**QSH-10**	**10**
						130726	**QSH-10-50**	**50**
12	9	–	52.8	17.5	3	**153255**	**QSH-12**	**10**
						130727	**QSH-12-20**	**20**
16	11	–	55.6	18	4	**153256**	**QSH-16**	**1**
Reducing								
6	2.3	4	36.7	–	0.5	**153257**	**QSH-6-4**	**10**
						130718	**QSH-6-4-100**	**100**
8	2.3	4	41.1	–	0.9	**130625**	**QSH-8-4**	**10**
	3.8	6	40.5	–	0.9	**153258**	**QSH-8-6**	**10**
						130719	**QSH-8-6-50**	**50**
10	3.8	6	43.7	–	1.4	**130626**	**QSH-10-6**	**10**
	4.9	8	44	–	1.3	**153259**	**QSH-10-8**	**10**
						130720	**QSH-10-8-50**	**50**
12	4.9	8	47.5	–	2.1	**130627**	**QSH-12-8**	**10**
	7.1	10	49.6	–	2.2	**153260**	**QSH-12-10**	**10**
						130721	**QSH-12-10-20**	**20**
16	7.8	12	54.4	–	4.2	**153261**	**QSH-16-12**	**1**
						130722	**QSH-16-12-20**	**20**

* Packaging unit quantity

Blanking plug QSC-...H



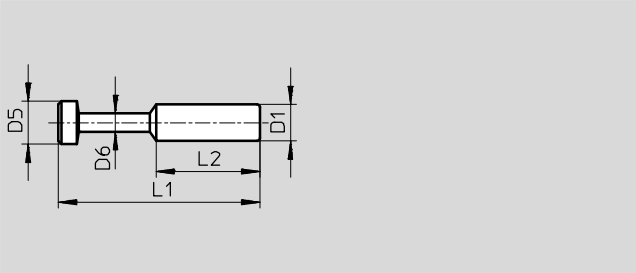

Dimensions and ordering data

Push-in sleeve ∅ D1	D5 ∅	D6 ∅	L1	L2	Weight/piece [g]	Part No.	Type	PU*
4	5	3	28	15	0.5	**153267**	**QSC-4H**	**10**
						130699	**QSC-4H-100**	**100**
6	7	3	33	17	0.5	**153268**	**QSC-6H**	**10**
						130700	**QSC-6H-100**	**100**
8	9	4	37	18	1	**153269**	**QSC-8H**	**10**
						130701	**QSC-8H-50**	**50**
10	11	5	42	20.5	2	**153270**	**QSC-10H**	**10**
						130702	**QSC-10H-50**	**50**
12	13	6	44	23	2.5	**153271**	**QSC-12H**	**10**
						130703	**QSC-12H-20**	**20**
16	17	8	46	24	4	**153272**	**QSC-16H**	**1**

* Packaging unit quantity

Push-in L-fitting QSL
Orientable
Male thread with external hex



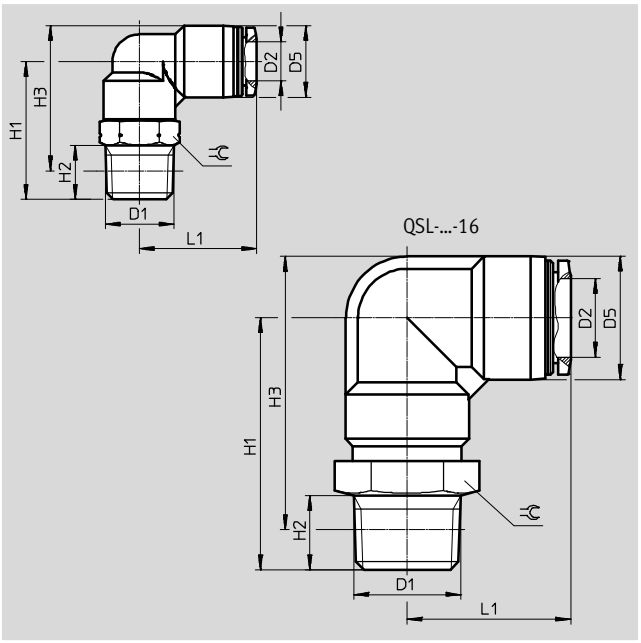

Dimensions and ordering data

Connection D1	Nominal size [mm]	Tubing O.D. D2	D5 ∅	H1	H2	H3	L1	⌀	Weight/ piece [g]	Part No.	Type	PU*
R thread												
R1/8	2.8	4	10	22	8	23	18.7	10	10	**153045**	**QSL-1/8-4**	**10**
										130728	**QSL-1/8-4-100**	**100**
	4.2	6	12.5	22.5	8	24.8	20.3	10	11	**153046**	**QSL-1/8-6**	**10**
										130729	**QSL-1/8-6-100**	**100**
	6	8	14.5	24	8	27.3	22.7	12	14	**153048**	**QSL-1/8-8**	**10**
										130730	**QSL-1/8-8-50**	**50**
	6	10	17.5	25	8	29.8	25.5	12	18	**190658**	**QSL-1/8-10**	**10**
R1/4	2.8	4	10	29	11	28	20.7	14	18	**190659**	**QSL-1/4-4**	**10**
	4.3	6	12.5	28	11	28.2	21.8	14	19	**153047**	**QSL-1/4-6**	**10**
										130731	**QSL-1/4-6-100**	**100**
	6.7	8	14.5	28	11	29.2	23.7	14	20	**153049**	**QSL-1/4-8**	**10**
										130732	**QSL-1/4-8-50**	**50**
	8	10	17.5	28.5	11	31.2	26	14	23	**153051**	**QSL-1/4-10**	**10**
										130733	**QSL-1/4-10-50**	**50**
	8	12	21	29.8	11	34.2	29	14	27	**164981**	**QSL-1/4-12**	**10**
										130734	**QSL-1/4-12-20**	**20**
R3/8	4.3	6	12.5	31.5	12	31.4	23.8	17	30	**190660**	**QSL-3/8-6**	**10**
	6.7	8	14.5	31	12	31.9	24.7	17	31	**153050**	**QSL-3/8-8**	**10**
										130735	**QSL-3/8-8-50**	**50**
	8.3	10	17.5	32	12	34.4	27	17	34	**153052**	**QSL-3/8-10**	**10**
										130736	**QSL-3/8-10-20**	**20**
	10	12	21	32.5	12	36.7	29.7	17	38	**153053**	**QSL-3/8-12**	**10**
										130737	**QSL-3/8-12-20**	**20**
	11	16	25	47	11	53.2	33.1	22	74	**164958**	**QSL-3/8-16**	**1**
R1/2	8.3	10	17.5	36	15	36.6	27.5	21	57	**190661**	**QSL-1/2-10**	**1**
	10.3	12	21	36.5	15	38.8	30.7	21	61	**153054**	**QSL-1/2-12**	**1**
										130738	**QSL-1/2-12-20**	**20**
	13	16	25	51	15	55.3	33.1	22	79	**153055**	**QSL-1/2-16**	**1**
										130739	**QSL-1/2-16-20**	**20**

* Packaging unit quantity

Push-in fittings QS, Quick Star

Technical data

Push-in L-fitting QSL
Orientable
Male thread with external hex



G thread

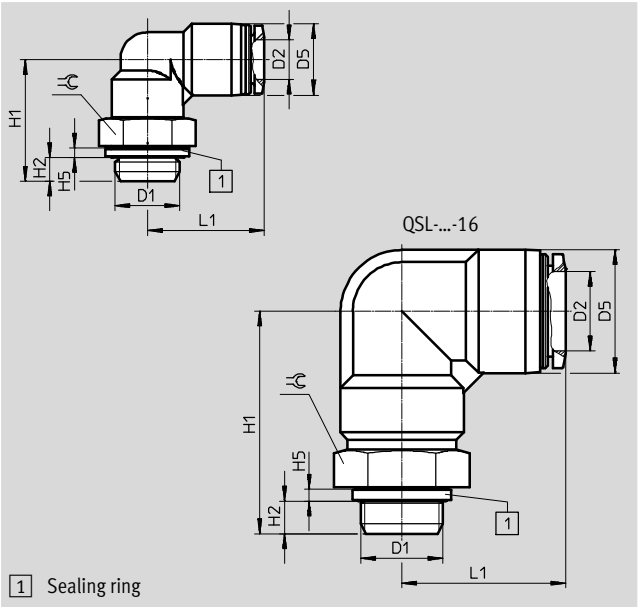

1 Sealing ring

Dimensions and ordering data

Connection D1	Nominal size [mm]	Tubing O.D. D2	D5 ∅	H1	H2	H5	L1	⌀	Weight/ piece [g]	Part No.	Type	PU*
G thread with sealing ring												
G1/8	2.8	4	10	21.1	4.2	1.9	18.7	13	13	**186116**	**QSL-G1/8-4**	**10**
										132048	**QSL-G1/8-4-100**	**100**
	4.2	6	12.5	21.6	4.2	1.9	20.3	13	14	**186117**	**QSL-G1/8-6**	**10**
										132049	**QSL-G1/8-6-100**	**100**
	6	8	14.5	22.1	4.2	1.9	22.7	13	15	**186119**	**QSL-G1/8-8**	**10**
										132050	**QSL-G1/8-8-50**	**50**
G1/4	4.3	6	12.5	24.7	4.8	1.9	21.8	17	21	**186118**	**QSL-G1/4-6**	**10**
										132051	**QSL-G1/4-6-100**	**100**
	6.7	8	14.5	24.7	4.8	1.9	23.7	17	23	**186120**	**QSL-G1/4-8**	**10**
										132052	**QSL-G1/4-8-50**	**50**
	8	10	17.5	25.2	4.8	1.9	26	17	26	**186122**	**QSL-G1/4-10**	**10**
										132053	**QSL-G1/4-10-50**	**50**
	8	12	21	26.5	4.8	1.9	29	17	29	**186351**	**QSL-G1/4-12**	**10**
										132054	**QSL-G1/4-12-20**	**20**
G3/8	6.7	8	14.5	27.2	5.8	2.4	24.7	19	30	**186121**	**QSL-G3/8-8**	**10**
										132055	**QSL-G3/8-8-50**	**50**
	8.3	10	17.5	28.2	5.8	2.4	27	19	33	**186123**	**QSL-G3/8-10**	**10**
										132056	**QSL-G3/8-10-20**	**20**
	10	12	21	28.7	5.8	2.4	29.7	19	37	**186124**	**QSL-G3/8-12**	**10**
										132057	**QSL-G3/8-12-20**	**20**
	11	16	25	44.2	5.8	2.4	33.1	24	77	**186348**	**QSL-G3/8-16**	**1**
G1/2	10.3	12	21	32.2	6.8	2.4	30.7	24	67	**186125**	**QSL-G1/2-12**	**1**
										132058	**QSL-G1/2-12-20**	**20**
	13	16	25	45.2	6.8	2.4	33.1	24	75	**186126**	**QSL-G1/2-16**	**1**
										132059	**QSL-G1/2-16-20**	**20**

* Packaging unit quantity

Push-in long L-fitting QSLL
Orientable
Male thread with external hex


R thread

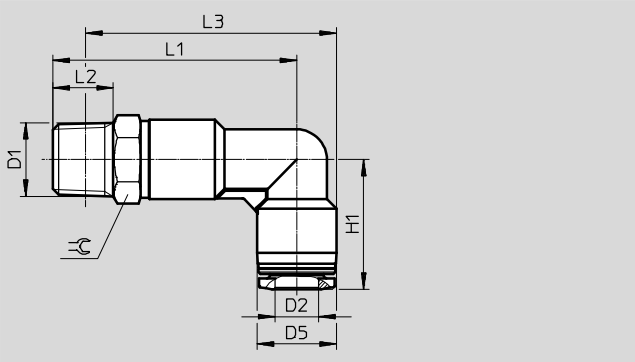

Dimensions and ordering data

Connection D1	Nominal size [mm]	Tubing O.D. D2	D5 ∅	H1	L1	L2	L3	⫧	Weight/ piece [g]	Part No.	Type	PU*
R thread												
R⅛	2.8	4	10	18.7	34	8	35	10	11	**153076**	**QSLL-⅛-4**	**10**
	4.3	6	12.5	20.3	37	8	39.3	10	13	**153077**	**QSLL-⅛-6**	**10**
	6	8	14.5	22.7	40.5	8	43.8	12	16	**153079**	**QSLL-⅛-8**	**10**
R¼	2.8	4	10	20.7	41	11	40	14	19	**190662**	**QSLL-¼-4**	**10**
	4.3	6	12.5	21.8	42.5	11	42.7	14	20	**153078**	**QSLL-¼-6**	**10**
	6.7	8	14.5	23.7	44.5	11	45.7	14	22	**153080**	**QSLL-¼-8**	**10**
	8	10	17.5	26	48	11	50.7	14	26	**153082**	**QSLL-¼-10**	**10**
R⅜	4.3	6	12.5	23.8	46	12	45.9	17	33	**190663**	**QSLL-⅜-6**	**10**
	6.7	8	14.5	24.7	47.5	12	48.4	17	35	**153081**	**QSLL-⅜-8**	**10**
	8.3	10	17.5	27	51.5	12	53.9	17	38	**153083**	**QSLL-⅜-10**	**10**
	10	12	21	29.7	55.5	12	59.7	17	42	**153084**	**QSLL-⅜-12**	**10**
R½	8.3	10	17.5	27	55.5	15	56.1	21	63	**190664**	**QSLL-½-10**	**1**
	10.3	12	21	29.7	59.5	15	61.8	21	68	**153085**	**QSLL-½-12**	**1**

* Packaging unit quantity

Push-in long L-fitting QSLL
Orientable
Male thread with external hex

with sealing ring

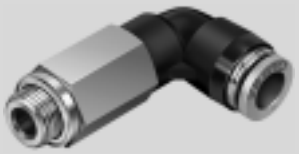

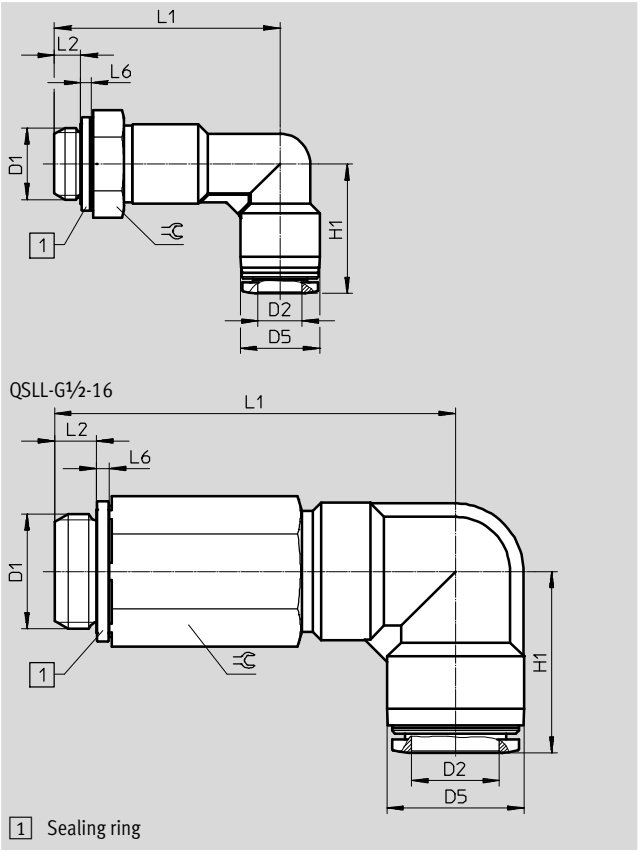

G thread

1 Sealing ring

Dimensions and ordering data

Connection D1	Nominal size [mm]	Tubing O.D. D2	D5 ∅	H1	L1	L2	L6	⊂	Weight/ piece [g]	Part No.	Type	PU*
G thread with sealing ring												
G1/8	2.8	4	10	18.7	33.1	4.2	1.9	13	14	**186127**	**QSLL-G1/8-4**	**10**
										133015	**QSLL-G1/8-4-100**	**100**
	4.3	6	12.5	20.3	36.1	4.2	1.9	13	15	**186128**	**QSLL-G1/8-6**	**10**
										133016	**QSLL-G1/8-6-100**	**100**
	6	8	14.5	22.7	38.6	4.2	1.9	13	17	**186130**	**QSLL-G1/8-8**	**10**
										133017	**QSLL-G1/8-8-100**	**100**
G1/4	4.3	6	12.5	21.8	39.2	4.8	1.9	17	25	**186129**	**QSLL-G1/4-6**	**10**
	6.7	8	14.5	23.7	41.2	4.8	1.9	17	27	**186131**	**QSLL-G1/4-8**	**10**
	8	10	17.5	26	44.7	4.8	1.9	17	31	**186133**	**QSLL-G1/4-10**	**10**
	8	12	21	29	49.5	4.8	1.9	17	35	**132596**	**QSLL-G1/4-12**	**1**
G3/8	6.7	8	14.5	24.7	43.7	5.8	2.4	19	34	**186132**	**QSLL-G3/8-8**	**10**
	8.3	10	17.5	27	47.7	5.8	2.4	19	37	**186134**	**QSLL-G3/8-10**	**10**
	10	12	21	29.7	51.7	5.8	2.4	19	41	**186135**	**QSLL-G3/8-12**	**10**
G1/2	10.3	12	21	29.7	55.2	6.8	2.4	24	75	**186136**	**QSLL-G1/2-12**	**1**
	13	16	25	33.1	72.2	6.8	2.4	24	158	**190665**	**QSLL-G1/2-16**	**1**

* Packaging unit quantity

Push-in L-fitting QSLF
Female thread with external hex


G thread

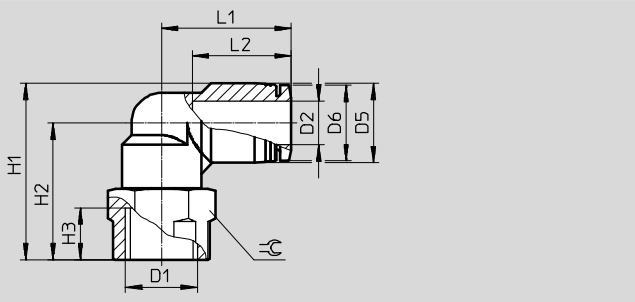

Dimensions and ordering data

Connection D1	Nominal size [mm]	Tubing O.D. D2	D5 ∅	D6 ∅	H1	H2	H3	L1	L2	⌀	Weight/ piece [g]	Part No.	Type	PU*
G thread														
G1⁄8	2.8	4	10	9.9	25	20	7	18.7	14.9	14	14	**153273**	**QSLF-1⁄8-4-B**	**10**
	4.2	6	12.5	11.8	26.8	20.5	7	20.3	17	14	15	**153274**	**QSLF-1⁄8-6-B**	**10**
	6	8	14.5	13.8	28.3	21	7	22.7	18.1	14	16	**153276**	**QSLF-1⁄8-8-B**	**10**
G1⁄4	4.3	6	12.5	11.8	31.3	25	9.5	21.8	17	17	22	**153275**	**QSLF-1⁄4-6-B**	**10**
	6.7	8	14.5	13.8	32.3	25	9.5	23.7	18.1	17	24	**153277**	**QSLF-1⁄4-8-B**	**10**
	8	10	17.5	16.8	34.3	25.5	9.5	26	20.2	17	27	**153279**	**QSLF-1⁄4-10-B**	**10**
G3⁄8	6.7	8	14.5	13.8	34.8	27.5	11	24.7	18.1	21	33	**153278**	**QSLF-3⁄8-8-B**	**10**
	8.3	10	17.5	16.8	37.3	28.5	11	27	20.2	21	36	**153280**	**QSLF-3⁄8-10-B**	**10**

* Packaging unit quantity

Push-in L-fitting QSLV-...-I
Orientable
Male thread with internal hex


R thread

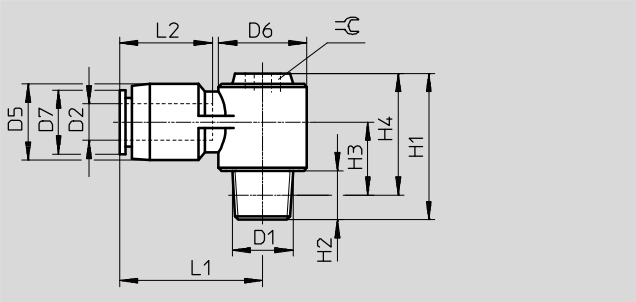


G thread

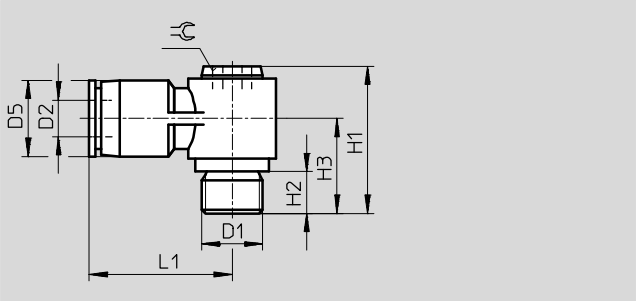

Dimensions and ordering data

Connection D1	Nominal size [mm]	Tubing O.D. D2	D5 ∅	D6 ∅	D7 ∅	H1	H2	H3	H4	L1	L2	⌀	Weight/ piece [g]	Part No.	Type	PU*
R thread																
R⅛	3	6	13	14.3	11.8	24	8	11.5	20	23.7	17	5	15	**153097**	**QSLV-⅛-6-I**	**10**
	4.2	8	14	17.9	13.8	27	8	12	23	26.7	18.1	8	22	**153099**	**QSLV-⅛-8-I**	**10**
R¼	3.1	6	13	14.3	11.8	27	11	12.5	21	23.7	17	5	22	**153098**	**QSLV-¼-6-I**	**10**
	4	8	14	17.9	13.8	30	11	13	24	26.7	18.1	8	28	**153100**	**QSLV-¼-8-I**	**10**
	5.4	10	18	21.3	16.8	34	11	15	28	30.7	20.7	10	40	**153102**	**QSLV-¼-10-I**	**10**
R⅜	4.2	8	14	17.9	13.8	31	12	13.7	24.7	26.7	18.1	8	37	**153101**	**QSLV-⅜-8-I**	**10**
	5.4	10	18	21.3	16.8	35	12	15.7	28.7	30.7	20.7	10	49	**153103**	**QSLV-⅜-10-I**	**10**
	6.9	12	21	26.3	19.8	39	12	17.7	32.7	36.4	23.4	12	68	**153104**	**QSLV-⅜-12-I**	**10**
R½	6.4	12	21	26.3	19.8	42	15	18.8	33.8	36.4	23.4	12	85	**153105**	**QSLV-½-12-I**	**1**
G thread																
G⅛	3	6	13	–	–	23	5.1	14.5	–	23.7	–	5	15	**186148**	**QSLV-G⅛-6-I**	**10**
	4.2	8	14	–	–	26	5.1	15	–	26.7	–	8	22	**186150**	**QSLV-G⅛-8-I**	**10**
G¼	3.1	6	13	–	–	23.5	5.6	15	–	23.7	–	5	19	**186149**	**QSLV-G¼-6-I**	**10**
	4	8	14	–	–	26.5	5.6	15.5	–	26.7	–	8	25	**186151**	**QSLV-G¼-8-I**	**10**
	5.4	10	18	–	–	30.5	5.6	17.5	–	30.7	–	10	38	**186153**	**QSLV-G¼-10-I**	**10**
G⅜	4.2	8	14	–	–	28	6.6	17	–	26.7	–	8	33	**186152**	**QSLV-G⅜-8-I**	**10**
	5.4	10	18	–	–	32	6.6	19	–	30.7	–	10	45	**186154**	**QSLV-G⅜-10-I**	**10**
	6.9	12	21	–	–	36	6.6	21	–	36.4	–	12	65	**186155**	**QSLV-G⅜-12-I**	**10**
G½	6.4	12	21	–	–	37	7.6	22	–	36.4	–	12	75	**186156**	**QSLV-G½-12-I**	**1**

* Packaging unit quantity

Push-in L-fitting QSLV
Orientable
Male thread with external hex


M thread

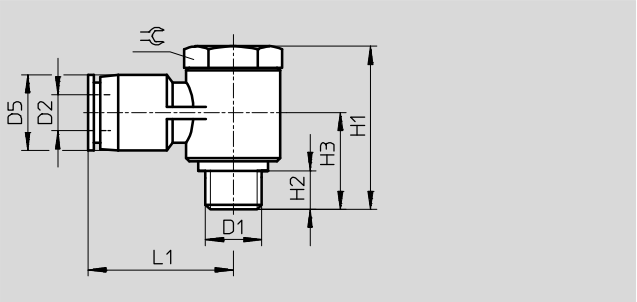


R thread

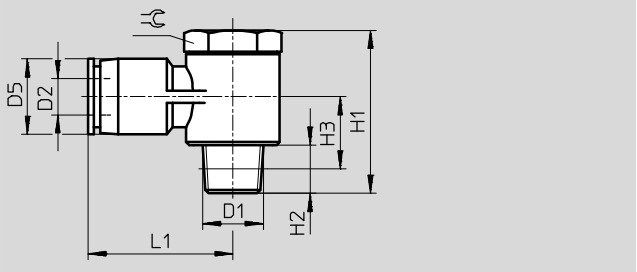

Dimensions and ordering data

Connection D1	Nominal size [mm]	Tubing O.D. D2	D5 ∅	H1	H2	H3	L1	⫷	Weight/ piece [g]	Part No.	Type	PU*
Metric thread												
M5	1.6	6	12.5	17.7	3.5	10.9	23.1	8	8.2	**190666**	**QSLV-M-5-6**	**10**
R thread												
R⅛	2.4	4	10	27	8	12	22.5	14	20	**153086**	**QSLV-⅛-4**	**10**
										130749	**QSLV-⅛-4-100**	**100**
	3.7	6	12.5	27	8	12	24	14	35.5	**153087**	**QSLV-⅛-6**	**10**
										130750	**QSLV-⅛-6-100**	**100**
	4.4	8	14.5	27	8	12	26	14	37	**153089**	**QSLV-⅛-8**	**10**
										130751	**QSLV-⅛-8-50**	**50**
R¼	3.8	6	12.5	31.5	11	13.5	27	17	32.5	**153088**	**QSLV-¼-6**	**10**
										130752	**QSLV-¼-6-100**	**100**
	5	8	14.5	31.5	11	13.5	28.5	17	59.5	**153090**	**QSLV-¼-8**	**10**
										130753	**QSLV-¼-8-50**	**50**
	5.4	10	17.5	31.5	11	14.5	30.5	17	62.5	**153092**	**QSLV-¼-10**	**10**
										130754	**QSLV-¼-10-50**	**50**
R⅜	5.2	8	14.5	36	12	15.5	30.5	21	54.5	**153091**	**QSLV-⅜-8**	**10**
	6.3	10	17.5	36	12	15.5	33	21	66	**153093**	**QSLV-⅜-10**	**10**
	7.1	12	21	36	12	17	35	21	97.5	**153094**	**QSLV-⅜-12**	**10**
R½	8	12	21	40.5	15	16.5	38	24	100	**153095**	**QSLV-½-12**	**1**
	8.9	16	25	48.5	15	22	36.5	24	115	**153096**	**QSLV-½-16**	**1**

* Packaging unit quantity

Push-in L-fitting QSLV
Orientable
Male thread with external hex


G thread

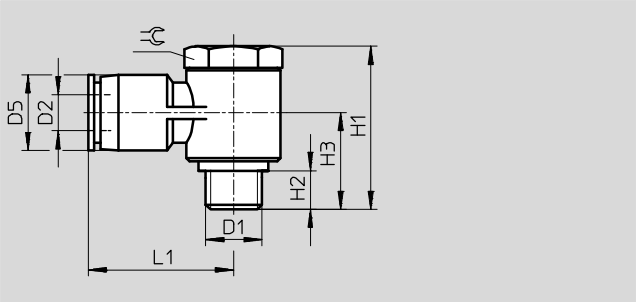

Dimensions and ordering data

Connection D1	Nominal size [mm]	Tubing O.D. D2	D5 ∅	H1	H2	H3	L1	⌀	Weight/ piece [g]	Part No.	Type	PU*
G thread												
G1⁄8	2.3	4	10	23.7	5.1	13.8	23.4	14	22	**186137**	**QSLV-G1⁄8-4**	**10**
										132060	**QSLV-G1⁄8-4-100**	**100**
	3.5	6	12.4	23.7	5.1	14.1	25.5	14	23	**186138**	**QSLV-G1⁄8-6**	**10**
										132061	**QSLV-G1⁄8-6-100**	**100**
	4	8	14.4	23.7	5.1	15.1	28.4	14	25	**186140**	**QSLV-G1⁄8-8**	**10**
										132062	**QSLV-G1⁄8-8-50**	**50**
G1⁄4	3.7	6	12.4	28.6	5.6	16	29	19	44	**186139**	**QSLV-G1⁄4-6**	**10**
										132063	**QSLV-G1⁄4-6-100**	**100**
	4.9	8	14.4	28.6	5.6	16	28.9	19	45	**186141**	**QSLV-G1⁄4-8**	**10**
										132064	**QSLV-G1⁄4-8-50**	**50**
	5.3	10	17.6	28.6	5.6	17.3	31.2	19	48	**186143**	**QSLV-G1⁄4-10**	**10**
										132065	**QSLV-G1⁄4-10-50**	**50**
G3⁄8	5.4	8	14.4	33.1	6.6	19.2	31	24	71	**186142**	**QSLV-G3⁄8-8**	**10**
	6.4	10	17.6	33.1	6.6	19.2	33.6	24	74	**186144**	**QSLV-G3⁄8-10**	**10**
	6.4	12	21	33.1	6.6	20.9	36.4	24	77	**186145**	**QSLV-G3⁄8-12**	**10**
G1⁄2	7	12	21	34	7.6	21.9	37.9	27	99	**186146**	**QSLV-G1⁄2-12**	**1**
	8.1	16	25	43.1	7.6	24.8	38.1	27	115	**186147**	**QSLV-G1⁄2-16**	**1**

* Packaging unit quantity

Push-in L-connector QSL



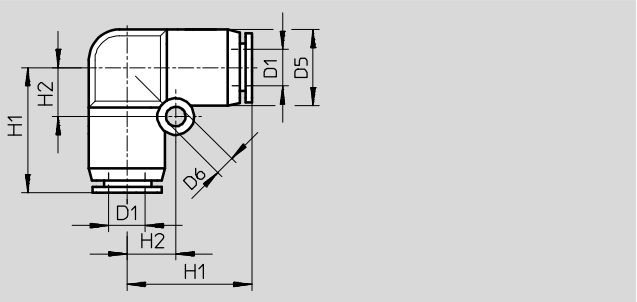

Dimensions and ordering data

Tubing O.D. D1	Nominal size [mm]	D5 ∅	D6 ∅	H1	H2	Weight/piece [g]	Part No.	Type	PU*
4	2.3	10	3.2	16.9	6.5	5.1	**153070**	**QSL-4**	**10**
							130740	**QSL-4-100**	**100**
6	3.6	12.5	3.2	20.1	8	7.3	**153071**	**QSL-6**	**10**
							130741	**QSL-6-100**	**100**
8	4.6	15	4.2	22.4	10	11	**153072**	**QSL-8**	**10**
							130742	**QSL-8-50**	**50**
10	6.2	17.5	4.2	26.2	12	17	**153073**	**QSL-10**	**10**
							130743	**QSL-10-50**	**50**
12	7.7	21	4.2	29.4	14	25	**153074**	**QSL-12**	**10**
							130744	**QSL-12-20**	**20**
16	10.8	25	4.2	33.1	12	31	**153075**	**QSL-16**	**1**

* Packaging unit quantity

Push-in L-connector QSL-...H
with push-in sleeve



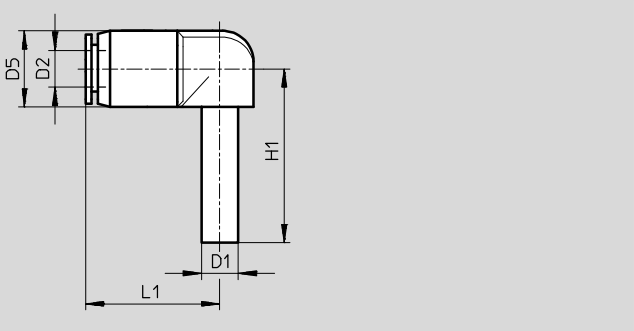



Long push-in sleeve

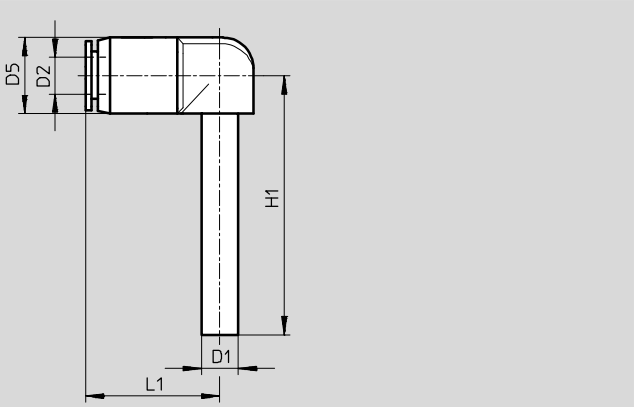

Dimensions and ordering data

Push-in sleeve ∅ D1	Nominal size [mm]	Tubing O.D. D2	D5 ∅	H1	L1	Weight/piece [g]	Part No.	Type	PU*
4	2	4	10	25	16.8	2.7	**153056**	**QSL-4H**	**10**
							130745	**QSL-4H-100**	**100**
6	3.2	6	12.5	28.5	19.8	3.9	**153057**	**QSL-6H**	**10**
							130746	**QSL-6H-100**	**100**
8	4.7	8	14.5	30.7	21.8	5.7	**153058**	**QSL-8H**	**10**
							130747	**QSL-8H-50**	**50**
10	5.7	10	17.5	33.7	24.9	9.6	**153059**	**QSL-10H**	**10**
							130748	**QSL-10H-50**	**50**
12	6.8	12	21	39	28.9	15	**153060**	**QSL-12H**	**10**
Reducing									
6	2.4	4	12.5	28.5	17.7	3.6	**153061**	**QSL-6H-4**	**10**
8	3.5	6	14.5	30.7	21.9	5.2	**153062**	**QSL-8H-6**	**10**
10	4.9	8	17.5	33.7	24.6	8	**153063**	**QSL-10H-8**	**10**
12	6.1	10	21	39	28.7	14	**153064**	**QSL-12H-10**	**10**
Long push-in sleeve									
4	2	4	10	36	16.8	2.8	**153065**	**QSL-4HL**	**10**
6	3.1	6	12.5	42	19.8	4.2	**153066**	**QSL-6HL**	**10**
8	4.5	8	14.5	46.7	21.8	6.2	**153067**	**QSL-8HL**	**10**
10	5.6	10	17.5	51.7	24.9	11	**153068**	**QSL-10HL**	**10**
12	6.7	12	21	59.5	28.95	16	**153069**	**QSL-12HL**	**10**

* Packaging unit quantity

Push-in T-fitting QST
Orientable
Male thread with external hex



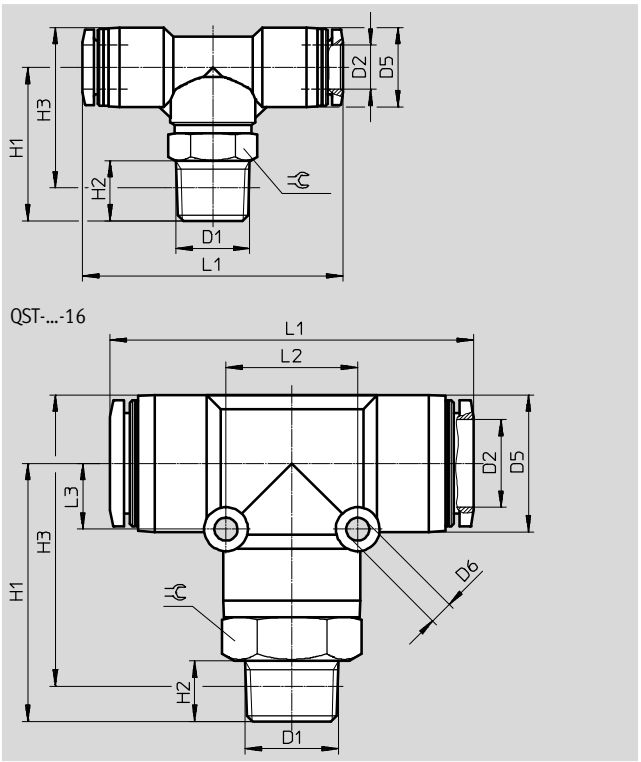

Dimensions and ordering data

Connection D1	Nominal size [mm]	Tubing O.D. D2	D5 ∅	D6 ∅	H1	H2	H3	L1	L2	L3	⌀	Weight/ piece [g]	Part No.	Type	PU*
R thread															
R⅛	2.8	4	10	–	22	8	23	37.4	–	–	10	13	**153106**	**QST-⅛-4**	**10**
													130793	**QST-⅛-4-100**	**100**
	4.2	6	12.5	–	22.5	8	24.8	40.5	–	–	10	14	**153107**	**QST-⅛-6**	**10**
													130794	**QST-⅛-6-100**	**100**
	6	8	14.5	–	24	8	27.3	45.4	–	–	12	19	**153109**	**QST-⅛-8**	**10**
													130795	**QST-⅛-8-50**	**50**
	6	10	17.5	–	25	8	29.8	51	–	–	12	25	**190667**	**QST-⅛-10**	**10**
R¼	2.8	4	10	–	29	11	28	41.4	–	–	14	20	**190668**	**QST-¼-4**	**10**
	4.3	6	12.5	–	28	11	28.2	43.5	–	–	14	22	**153108**	**QST-¼-6**	**10**
													130796	**QST-¼-6-100**	**100**
	6.7	8	14.5	–	28	11	29.2	47.4	–	–	14	25	**153110**	**QST-¼-8**	**10**
													130797	**QST-¼-8-50**	**50**
	8	10	17.5	–	28.5	11	31.2	52	–	–	14	31	**153112**	**QST-¼-10**	**10**
													130798	**QST-¼-10-50**	**50**
	8	12	21	–	29.8	11	34.2	57.9	–	–	14	38	**190669**	**QST-¼-12**	**10**
R⅜	4.3	6	12.5	–	31.5	12	31.4	47.5	–	–	17	33	**190670**	**QST-⅜-6**	**10**
	6.7	8	14.5	–	31	12	31.9	49.4	–	–	17	35	**153111**	**QST-⅜-8**	**10**
													130799	**QST-⅜-8-50**	**50**
	8.3	10	17.5	–	32	12	34.4	54	–	–	17	42	**153113**	**QST-⅜-10**	**10**
													130800	**QST-⅜-10-20**	**20**
	10	12	21	–	32.5	12	36.7	59.4	–	–	17	48	**153114**	**QST-⅜-12**	**10**
													130801	**QST-⅜-12-20**	**20**
	11	16	25	4.2	47	11	53.2	66.2	24	12	22	89	**164959**	**QST-⅜-16**	**1**
R½	8.3	10	17.5	–	36	15	36.6	55	–	–	21	65	**190672**	**QST-½-10**	**1**
	10.3	12	21	–	36.5	15	38.8	61.4	–	–	21	72	**153115**	**QST-½-12**	**1**
	13	16	25	4.2	51	15	55.3	66.2	24	12	22	93	**153116**	**QST-½-16**	**1**

* Packaging unit quantity

Push-in fittings QS, Quick Star

Technical data

Push-in T-fitting QST
Orientable
Male thread with external hex



G thread

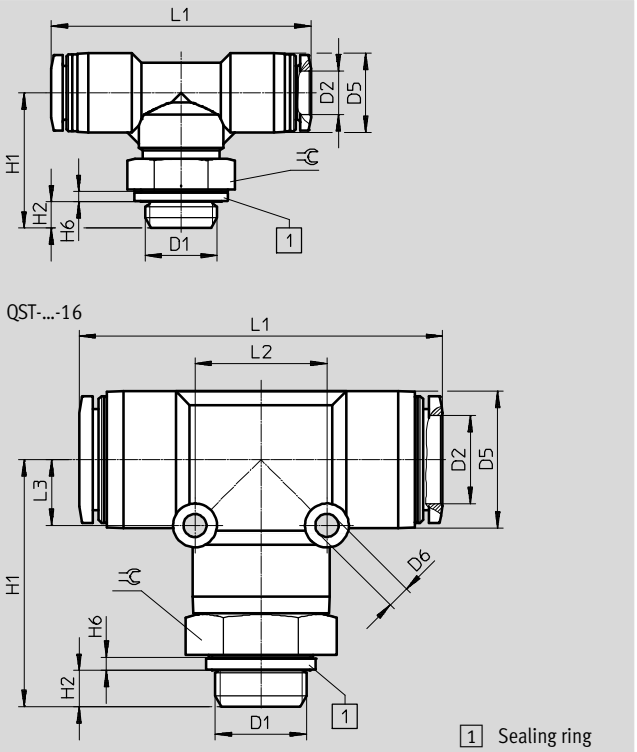

1 Sealing ring

Dimensions and ordering data

Connection D1	Nominal size [mm]	Tubing O.D. D2	D5 ∅	D6 ∅	H1	H2	H6	L1	L2	L3	⌀	Weight/ piece [g]	Part No.	Type	PU*
G thread with sealing ring															
G1⁄8	2.8	4	10	–	21.1	4.2	1.9	37.4	–	–	13	15	**186157**	**QST-G1⁄8-4**	**10**
													132066	**QST-G1⁄8-4-100**	**100**
	4.2	6	12.5	–	21.6	4.2	1.9	40.5	–	–	13	17	**186158**	**QST-G1⁄8-6**	**10**
													132067	**QST-G1⁄8-6-100**	**100**
	6	8	14.5	–	22.1	4.2	1.9	45.4	–	–	13	19	**186160**	**QST-G1⁄8-8**	**10**
													132068	**QST-G1⁄8-8-50**	**50**
G1⁄4	4.3	6	12.5	–	24.7	4.8	1.9	43.5	–	–	17	24	**186159**	**QST-G1⁄4-6**	**10**
													132069	**QST-G1⁄4-6-100**	**100**
	6.7	8	14.5	–	24.7	4.8	1.9	47.4	–	–	17	27	**186161**	**QST-G1⁄4-8**	**10**
													132070	**QST-G1⁄4-8-50**	**50**
	8	10	17.5	–	25.2	4.8	1.9	52	–	–	17	33	**186163**	**QST-G1⁄4-10**	**10**
													132071	**QST-G1⁄4-10-50**	**50**
	8	12	21	–	26.5	4.8	1.9	57.9	–	–	17	43	**132597**	**QST-G1⁄4-12**	**1**
G3⁄8	6.7	8	14.5	–	27.2	5.8	2.4	49.4	–	–	19	34	**186162**	**QST-G3⁄8-8**	**10**
													132072	**QST-G3⁄8-8-50**	**50**
	8.3	10	17.5	–	28.2	5.8	2.4	54	–	–	19	41	**186164**	**QST-G3⁄8-10**	**10**
													132073	**QST-G3⁄8-10-20**	**20**
	10	12	21	–	28.7	5.8	2.4	59.4	–	–	19	47	**186165**	**QST-G3⁄8-12**	**10**
													132074	**QST-G3⁄8-12-20**	**20**
	11	16	25	4.2	44.2	5.8	2.4	66.2	24	12	24	97	**186349**	**QST-G3⁄8-16**	**1**
G1⁄2	10.3	12	21	–	32.2	6.8	2.4	61.4	–	–	24	78	**186166**	**QST-G1⁄2-12**	**1**
	13	16	25	4.2	45.2	6.8	2.4	66.2	24	12	24	95	**186167**	**QST-G1⁄2-16**	**1**

* Packaging unit quantity

Push-in T-connector QST



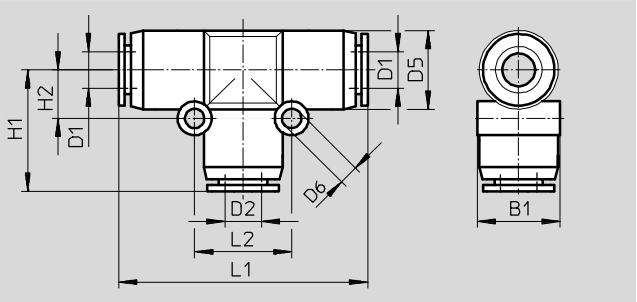

Dimensions and ordering data

Tubing O.D. D1	Nominal size [mm]	Tubing O.D. D2	D5 ∅	D6 ∅	B1	H1	H2	L1	L2	Weight/ piece [g]	Part No.	Type	PU*
4	2.6	4	10	3.2	10.4	17.2	6.5	34.4	13	7.5	**153128**	**QST-4**	**10**
											130802	**QST-4-100**	**100**
6	4	6	13	3.2	13.5	20.1	8	40.2	16	11	**153129**	**QST-6**	**10**
											130803	**QST-6-100**	**100**
8	5	8	15	3.2	15.6	22.2	9	44.4	18	16	**153130**	**QST-8**	**10**
											130804	**QST-8-50**	**50**
10	6.7	10	17.5	4.2	18.2	25.2	12	50.4	24	25	**153131**	**QST-10**	**10**
											130805	**QST-10-50**	**50**
12	8.7	12	21	4.2	21.7	28.4	14	56.8	28	36	**153132**	**QST-12**	**10**
											130806	**QST-12-20**	**20**
16	10.7	16	25	4.2	25.6	33.1	12	66.2	24	44	**153133**	**QST-16**	**1**
Reducing													
6	2.3	4	13	3.2	13	19.5	8	40.1	16	11	**153134**	**QST-6-4**	**10**
											130820	**QST-6-4-100**	**100**
8	2.3	4	14.5	3.2	15,1	21.7	9	44.4	18	14	**130613**	**QST-8-4**	**10**
	3.5	6	14.5	3.2	15,1	22.3	9	44.4	18	14	**153135**	**QST-8-6**	**10**
											130821	**QST-8-6-50**	**50**
10	3.7	6	17.5	4.2	18,2	25	12	50.4	24	22	**130614**	**QST-10-6**	**10**
	4.9	8	17.5	4.2	18,2	24.9	12	50.4	24	23	**153136**	**QST-10-8**	**10**
											130822	**QST-10-8-50**	**50**
12	5.1	8	21	4.2	21,7	27.7	14	56.8	28	32	**130615**	**QST-12-8**	**10**
	6.1	10	21	4.2	21,7	28	14	56.8	28	34	**153137**	**QST-12-10**	**10**
											130823	**QST-12-10-20**	**20**
16	7.6	12	25	4.2	25,7	33.2	12	66.2	24	45	**130616**	**QST-16-12**	**1**

* Packaging unit quantity

Push-in fittings QS, Quick Star

Technical data

Push-in T-fitting QSTF
Orientable
Male and female thread with external hex


R thread

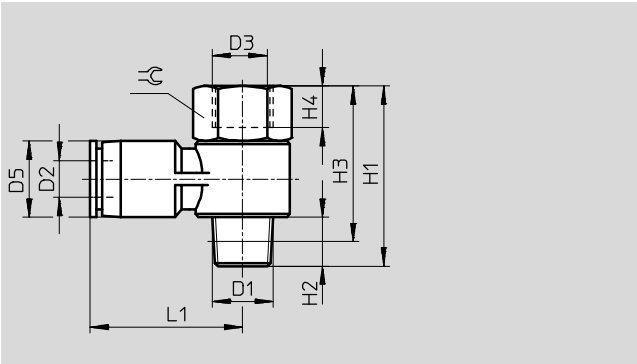


G thread

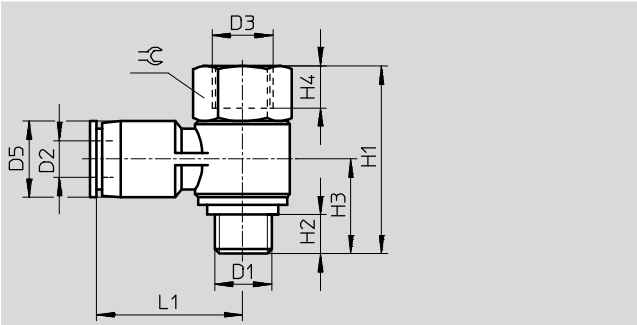

Dimensions and ordering data

Connection D1	Nominal size [mm]	Tubing O.D. D2	D3 ∅	D5 ∅	H1	H2	H3	H4	L1	⌀	Weight/ piece [g]	Part No.	Type	PU*
R thread														
R⅛	2.5	4	G⅛	10	32.5	8	28.5	7	22.2	14	22	**153182**	**QSTF-⅛-4-B**	**1**
	3.3	6	G⅛	12.5	32.5	8	28.5	7	24.2	14	23	**153183**	**QSTF-⅛-6-B**	**1**
	3.6	8	G⅛	14.5	32.5	8	28.5	7	26.2	14	25	**153185**	**QSTF-⅛-8-B**	**1**
R¼	3.6	6	G¼	12.5	38.5	11	32.5	9	26.8	17	37	**153184**	**QSTF-¼-6-B**	**1**
	4.4	8	G¼	14.5	38.5	11	32.5	9	28.2	17	39	**153186**	**QSTF-¼-8-B**	**1**
	4.4	10	G¼	18	38.5	11	32.5	9	30.5	17	42	**153188**	**QSTF-¼-10-B**	**1**
R⅜	4.9	8	G⅜	14.5	44.5	12	38.2	11	30.2	21	61	**153187**	**QSTF-⅜-8-B**	**1**
	5.6	10	G⅜	18	44.5	12	38.2	11	32.5	21	64	**153189**	**QSTF-⅜-10-B**	**1**
	6	12	G⅜	21	44.5	12	38.2	11	35.2	21	67	**153190**	**QSTF-⅜-12-B**	**1**
R½	7.4	12	G½	21	52.2	13	44	14	38.2	24	101	**153191**	**QSTF-½-12-B**	**1**
G thread with sealing ring														
G⅛	2.4	4	G⅛	10	26	5.1	13.8	7	23.4	14	20	**186199**	**QSTF-G⅛-4**	**1**
	3.2	6	G⅛	12.4	26	5.1	14.1	7	25.5	14	21	**186200**	**QSTF-G⅛-6**	**1**
	3.7	8	G⅛	14.4	26	5.1	15.1	7	28.4	14	23	**186202**	**QSTF-G⅛-8**	**1**
G¼	3.7	6	G¼	12.4	33.2	5.6	16	9	29	19	43	**186201**	**QSTF-G¼-6**	**1**
	4.4	8	G¼	14.4	33.2	5.6	16	9	28.9	19	44	**186203**	**QSTF-G¼-8**	**1**
	4.9	10	G¼	17.6	33.2	5.6	17.3	9	31.2	19	47	**186205**	**QSTF-G¼-10**	**1**
G⅜	4.9	8	G⅜	14.4	38.1	6.6	19.2	10.5	31	24	71	**186204**	**QSTF-G⅜-8**	**1**
	5.8	10	G⅜	17.6	38.1	6.6	19.2	10.5	33.6	24	74	**186206**	**QSTF-G⅜-10**	**1**
	6	12	G⅜	21	38.1	6.6	20.9	10.5	36.4	24	77	**186207**	**QSTF-G⅜-12**	**1**
G½	7	12	G½	21	42.8	7.6	21.9	13	37.9	27	99	**186208**	**QSTF-G½-12**	**1**

* Packaging unit quantity

Push-in T-fitting QSTL
Orientable
Male thread with external hex



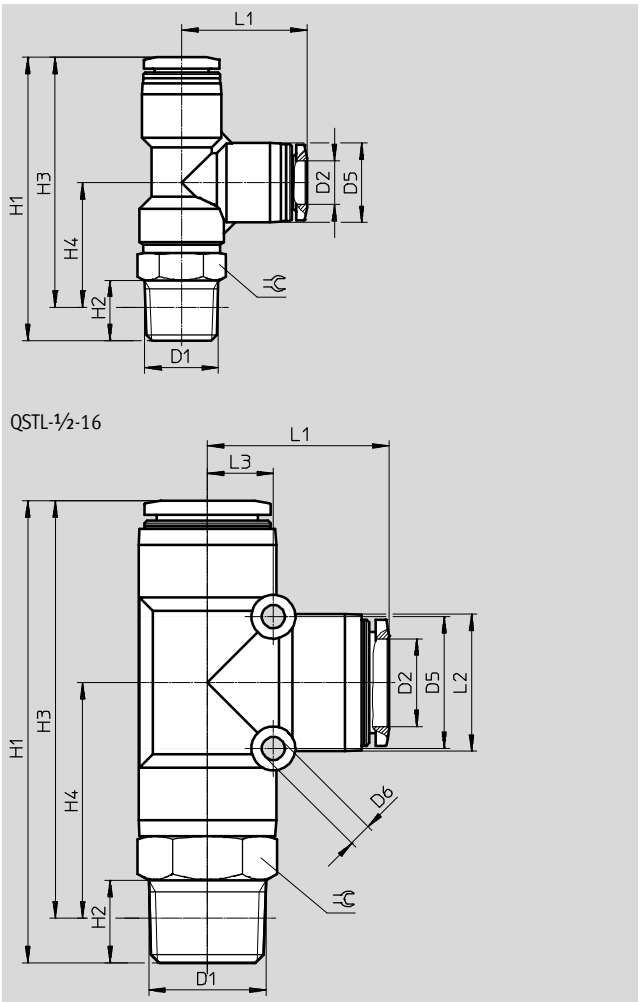

Dimensions and ordering data

Connection D1	Nominal size [mm]	Tubing O.D. D2	D5 ∅	D6 ∅	H1	H2	H3	H4	L1	L2	L3	⌀	Weight/ piece [g]	Part No.	Type	PU*
R thread																
R⅛	2.8	4	10	–	40.2	8	36.2	19	17.2	–	–	10	13	**153117**	**QSTL-⅛-4**	**10**
														130824	**QSTL-⅛-4-100**	**100**
	4.3	6	12.5	–	43.3	8	39.3	18.8	20.5	–	–	10	14	**153118**	**QSTL-⅛-6**	**10**
														130825	**QSTL-⅛-6-100**	**100**
	6	8	14.5	–	46.9	8	42.9	20	22.9	–	–	12	19	**153120**	**QSTL-⅛-8**	**10**
														130826	**QSTL-⅛-8-50**	**50**
R¼	4.3	6	12.5	–	48.8	11	42.7	22.2	20.5	–	–	14	22	**153119**	**QSTL-¼-6**	**10**
														130827	**QSTL-¼-6-100**	**100**
	6.7	8	14.5	–	51.7	11	45.7	22.8	22.9	–	–	14	25	**153121**	**QSTL-¼-8**	**10**
														130828	**QSTL-¼-8-50**	**50**
	8	10	17.5	–	54.7	11	48.7	22.5	26.2	–	–	14	31	**153123**	**QSTL-¼-10**	**10**
														130829	**QSTL-¼-10-50**	**50**
R⅜	6.7	8	14.5	–	55.4	12	49.1	26.2	22.9	–	–	17	35	**153122**	**QSTL-⅜-8**	**10**
	8.3	10	17.5	–	58.2	12	51.9	25.7	26.2	–	–	17	42	**153124**	**QSTL-⅜-10**	**10**
	10	12	21	–	63.5	12	57.2	26.7	30.5	–	–	17	48	**153125**	**QSTL-⅜-12**	**10**
R½	10.3	12	21	–	67.5	15	59.3	28.8	30.7	–	–	21	72	**153126**	**QSTL-½-12**	**1**
	13	16	25	4.2	84.1	15	75.9	42.8	33.1	24	12	22	93	**153127**	**QSTL-½-16**	**1**

* Packaging unit quantity

Push-in T-fitting QSTL
Orientable
Male thread with external hex



G thread

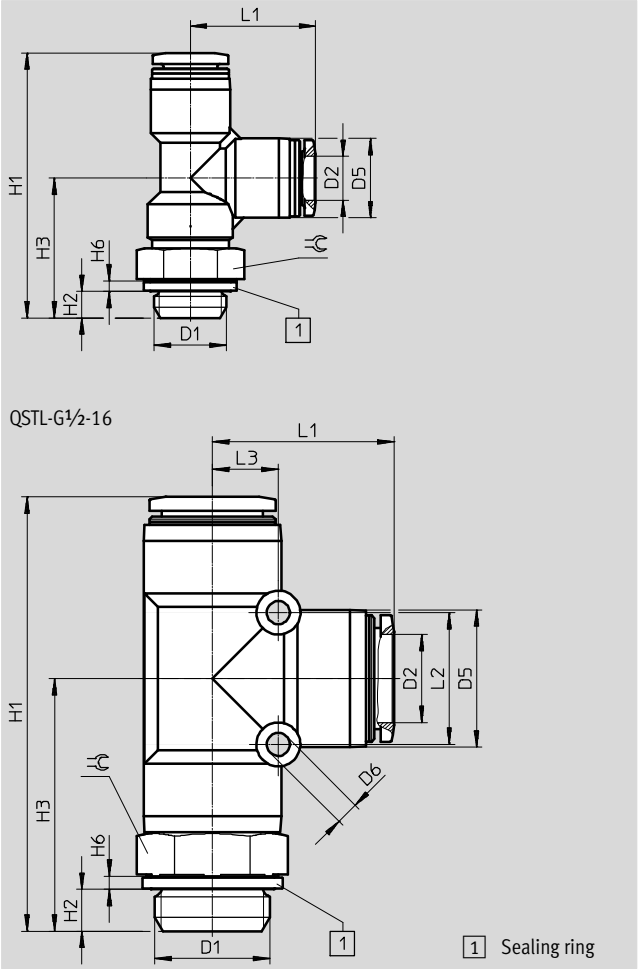

Dimensions and ordering data

Connection D1	Nominal size [mm]	Tubing O.D. D2	D5 ∅	D6 ∅	H1	H2	H3	H6	L1	L2	L3	⌀	Weight/ piece [g]	Part No.	Type	PU*
G thread with sealing ring																
G1/8	2.8	4	10	–	39.3	4.2	22.1	1.9	17.2	–	–	13	15	**186168**	**QSTL-G1/8-4**	**10**
														132075	**QSTL-G1/8-4-100**	**100**
	4.3	6	12.5	–	42.4	4.2	21.9	1.9	20.5	–	–	13	17	**186169**	**QSTL-G1/8-6**	**10**
														132076	**QSTL-G1/8-6-100**	**100**
	6	8	14.5	–	45	4.2	22.1	1.9	22.9	–	–	13	19	**186171**	**QSTL-G1/8-8**	**10**
														132077	**QSTL-G1/8-8-50**	**50**
G1/4	4.3	6	12.5	–	45.5	4.8	25	1.9	20.5	–	–	17	24	**186170**	**QSTl-G1/4-6**	**10**
														132078	**QSTl-G1/4-6-100**	**100**
	6.7	8	14.5	–	48.4	4.8	25.5	1.9	22.9	–	–	17	27	**186172**	**QSTL-G1/4-8**	**10**
														132079	**QSTL-G1/4-8-50**	**50**
	8	10	17.5	–	51.4	4.8	25.2	1.9	26.2	–	–	17	33	**186174**	**QSTL-G1/4-10**	**10**
														132080	**QSTL-G1/4-10-50**	**50**
G3/8	6.7	8	14.5	–	51.6	5.8	28.7	2.4	22.9	–	–	19	34	**186173**	**QSTL-G3/8-8**	**10**
	8.3	10	17.5	–	54.4	5.8	28.2	2.4	26.2	–	–	19	41	**186175**	**QSTL-G3/8-10**	**10**
	10	12	21	–	59.7	5.8	29.2	2.4	30.5	–	–	19	48	**186176**	**QSTL-G3/8-12**	**10**
G1/2	10.3	12	21	–	63.2	6.8	32.7	2.4	30.7	–	–	24	78	**186177**	**QSTL-G1/2-12**	**1**
	13	16	25	4.2	78.3	6.8	45.2	2.4	33.1	24	12	24	89	**186178**	**QSTL-G1/2-16**	**1**

* Packaging unit quantity

Push-in angled fitting QSW
Orientable
Male thread with external hex



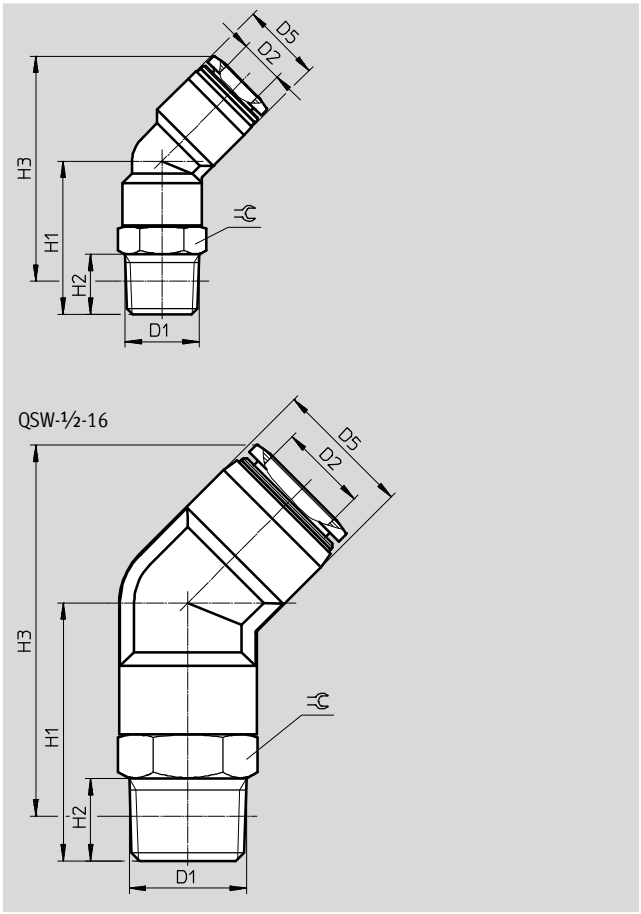

Dimensions and ordering data

Connection D1	Nominal size mm]	Tubing O.D. D2	D5	H1	H2	H3	⌀	Weight/ piece [g]	Part No.	Type	PU*
R thread											
R⅛	2.5	4	8	14.8	8	23	10	6.1	**130596**	**QSW-⅛-4**	**10**
	3.3	6	10.5	16.4	8	25.3	10	6.8	**130597**	**QSW-⅛-6**	**10**
	6	8	14.5	24	8	39.2	12	14	**130598**	**QSW-⅛-8**	**10**
R¼	3.3	6	10.5	21.4	11	28.2	14	17.9	**130599**	**QSW-¼-6**	**10**
	6.7	8	14.5	28	11	41.2	14	20	**130600**	**QSW-¼-8**	**10**
	8	10	17.5	28.5	11	44.9	14	23	**130601**	**QSW-¼-10**	**10**
R⅜	8.3	10	17.5	33	12	49.1	17	35	**130602**	**QSW-⅜-10**	**10**
	9.5	12	21	32.5	12	53.2	17	38	**130603**	**QSW-⅜-12**	**10**
R½	10.3	12	21	36.5	15	55.4	21	61	**130604**	**QSW-½-12**	**1**
	13	16	25	47	15	67.6	22	78	**130605**	**QSW-½-16**	**1**

* Packaging unit quantity

Push-in angled connector QSW-...HL
with push-in sleeve



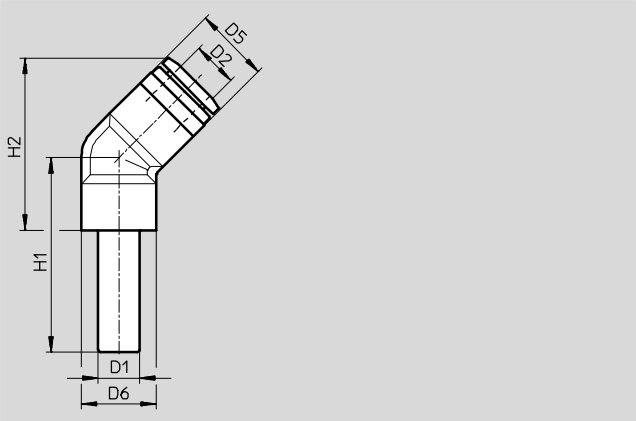

Dimensions and ordering data

Push-in sleeve ∅ D1	Nominal size mm]	Tubing O.D. D2	D5	D6	H1	H2	Weight/ piece [g]	Part No.	Type	PU*
4	2	4	8	8	21.8	15	1.4	**130617**	**QSW-4HL**	**10**
6	2.7	6	10.5	8	24.6	17.3	2.1	**130618**	**QSW-6HL**	**10**
8	5	8	14.5	10	28.5	25.7	5.8	**130619**	**QSW-8HL**	**10**
10	6,3	10	17.5	11	31.5	30.5	9.5	**130620**	**QSW-10HL**	**10**
12	7,9	12	21	14	35.5	36.3	14.5	**130621**	**QSW-12HL**	**10**

* Packaging unit quantity

Push-in X-connector QSX



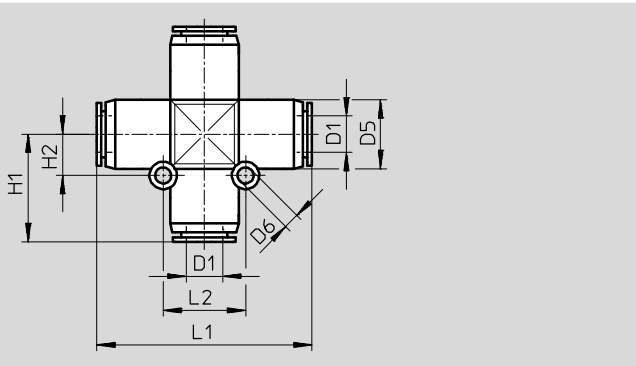

Dimensions and ordering data

Tubing O.D. D1	Nominal size [mm]	D5 ∅	D6 ∅	H1	H2	L1	L2	Weight/ piece [g]	Part No.	Type	PU*
8	4.7	15	3.5	23.5	9	47	18	20	**153285**	**QSX-8**	**10**
10	6.1	17.5	4.5	27.5	11	55	22	32	**153286**	**QSX-10**	**10**
12	7.5	21	4.5	31	12	62	24	46	**153287**	**QSX-12**	**10**

* Packaging unit quantity

Push-in Y-fitting QSY
Orientable
Male thread with external hex



M thread

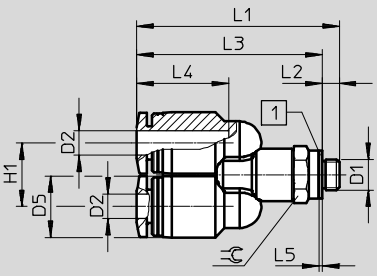

1 Sealing ring



R thread

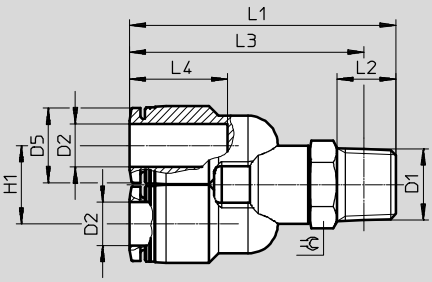

Dimensions and ordering data

Connection D1	Nominal size [mm]	Tubing O.D. D2	D5 ∅	H1	L1	L2	L3	L4	L5	⌀	Weight/ piece [g]	Part No.	Type	PU*
Metric thread with sealing ring														
M5	2.4	4	10	10.3	32.9	2.8	30.1	14.9	0.5	8	8	**190673**	**QSY-M5-4**	**10**
	2.4	6	12.5	12.5	38.3	2.8	35.5	17	0.5	10	13	**190674**	**QSY-M5-6**	**10**
R thread														
R1/8	3.1	4	10	10.3	38.4	8	34.4	14.9	–	10	13	**153138**	**QSY-1/8-4**	**10**
	4.2	6	12.5	12.5	41.3	8	37.3	17	–	10	15	**153139**	**QSY-1/8-6**	**10**
	5.9	8	14.5	14.5	46.1	8	42.1	18.1	–	12	20	**153141**	**QSY-1/8-8**	**10**
R1/4	3.3	4	10	10.3	43.4	11	37.4	14.9	–	14	20	**190675**	**QSY-1/4-4**	**10**
	4.8	6	12.5	12.5	48.3	11	42.2	17	–	14	22	**153140**	**QSY-1/4-6**	**10**
	6.2	8	14.5	14.5	49.3	11	43.3	18.1	–	14	25	**153142**	**QSY-1/4-8**	**10**
	7.2	10	17.5	17.5	53.6	11	47.6	20.2	–	14	32	**153144**	**QSY-1/4-10**	**10**
R3/8	6.6	8	14.5	14.5	52.5	12	46.2	18.1	–	17	36	**153143**	**QSY-3/8-8**	**10**
	7.4	10	17.5	17.5	56.7	12	50.4	20.2	–	17	43	**153145**	**QSY-3/8-10**	**10**
	8.4	12	21	21	60.6	12	54.3	23.4	–	17	51	**153146**	**QSY-3/8-12**	**10**
R1/2	8.3	12	21	21	64.7	15	56.5	23.4	–	21	74	**153147**	**QSY-1/2-12**	**1**

* Packaging unit quantity

Push-in fittings QS, Quick Star

Technical data

Push-in Y-fitting QSY
Orientable
Male thread with external hex



G thread

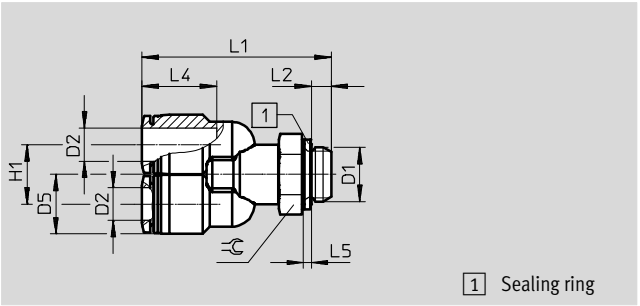

1 Sealing ring

Dimensions and ordering data

Connection D1	Nominal size [mm]	Tubing O.D. D2	D5 ∅	H1	L1	L2	L4	L5	⌀	Weight/ piece [g]	Part No.	Type	PU*
G thread with sealing ring													
G1⁄8	3.1	4	10	10.3	37.5	4.2	14.9	1.9	13	15	**186179**	**QSY-G1⁄8-4**	**10**
	4.2	6	12.5	12.5	40.4	4.2	17	1.9	13	17	**186180**	**QSY-G1⁄8-6**	**10**
	5.9	8	14.5	14.5	44.2	4.2	18.1	1.9	13	20	**186182**	**QSY-G1⁄8-8**	**10**
G1⁄4	4.8	6	12.5	12.5	45	4.8	17	1.9	17	25	**186181**	**QSY-G1⁄4-6**	**10**
	6.2	8	14.5	14.5	46	4.8	18.1	1.9	17	28	**186183**	**QSY-G1⁄4-8**	**10**
	7.2	10	17.5	17.5	50.3	4.8	20.2	1.9	17	35	**186185**	**QSY-G1⁄4-10**	**10**
G3⁄8	6.6	8	14.5	14.5	48.7	5.8	18.1	2.4	19	35	**186184**	**QSY-G3⁄8-8**	**10**
	7.4	10	17.5	17.5	52.9	5.8	20.2	2.4	19	42	**186186**	**QSY-G3⁄8-10**	**10**
	8.4	12	21	21	56.8	5.8	23.4	2.4	19	50	**186187**	**QSY-G3⁄8-12**	**10**
G1⁄2	8.3	12	21	21	60.4	6.8	23.4	2.4	24	80	**186188**	**QSY-G1⁄2-12**	**1**

* Packaging unit quantity

Push-in Y-connector QSY



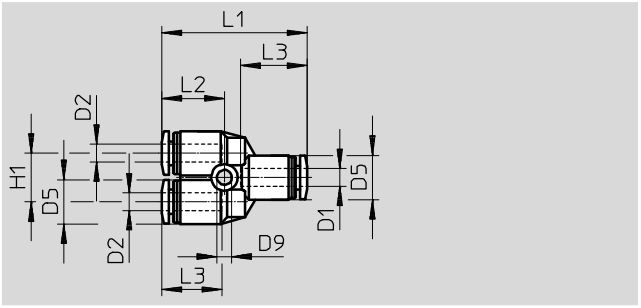

2 reducing outlets



Reducing

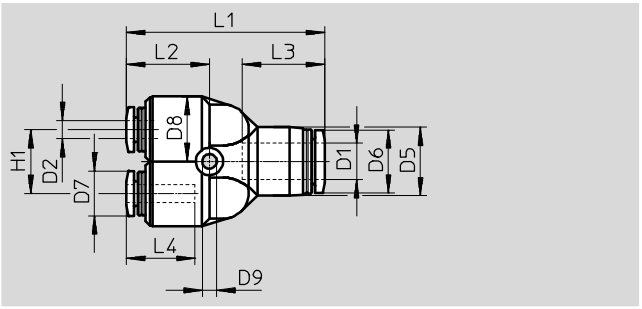

Dimensions and ordering data

Tubing O.D. D1	Nominal size [mm]	Tubing O.D. D2	D5 ∅	D6 ∅	D7 ∅	D8 ∅	D9 ∅	H1	L1	L2	L3	L4	Weight/ piece [g]	Part No.	Type	PU*
4	2.3	4	10	–	–	–	3.2	11	32.8	14.1	14.9	–	7.6	**153148**	**QSY-4**	**10**
														130807	**QSY-4-100**	**100**
6	3.6	6	13	–	–	–	3.4	12	37.7	15.8	17	–	11	**153149**	**QSY-6**	**10**
														130808	**QSY-6-100**	**100**
8	4.6	8	15	–	–	–	3.4	14	42.4	17.2	18.1	–	16	**153150**	**QSY-8**	**10**
														130809	**QSY-8-50**	**50**
10	5.9	10	18	–	–	–	4.5	18	48.4	19.5	20.7	–	26	**153151**	**QSY-10**	**10**
														130810	**QSY-10-20**	**20**
12	7	12	21.5	–	–	–	4.2	20	54.8	22.2	23.4	–	37	**153152**	**QSY-12**	**10**
														130811	**QSY-12-20**	**20**
16	8.5	16	25	–	–	–	4.5	24	62.2	22.1	24.1	–	45	**130609**	**QSY-16**	**1**
Reducing																
6	2.3	4	13	11.8	9.9	12.5	3.4	12	37.2	15.2	17	14.9	11	**153153**	**QSY-6-4**	**10**
														130812	**QSY-6-4-100**	**100**
8	1.7	4	14.5	13.8	9.9	12.5	3.4	14	41.9	16.7	18.1	14.9	13	**130610**	**QSY-8-4**	**10**
	3.2	6	14.5	13.8	11.8	12.5	3.4	14	42.5	17.3	18.1	17	13	**153154**	**QSY-8-6**	**10**
														130813	**QSY-8-6-50**	**50**
10	3.3	6	17.5	16.8	11.8	14.5	4.5	18	48.2	19.3	20.2	17	19	**130611**	**QSY-10-6**	**10**
	4.5	8	17.5	16.8	13.8	14.5	4.5	18	48.1	19.2	20.2	18.1	20	**153155**	**QSY-10-8**	**10**
														130814	**QSY-10-8-20**	**20**
12	4.5	8	21	19.8	13.8	17.5	4.5	20	54.3	21.7	23.4	18.1	27	**130612**	**QSY-12-8**	**10**
	5.8	10	21	19.8	16.8	17.5	4.5	20	54.6	22	23.4	20.2	30	**153156**	**QSY-12-10**	**10**
														130815	**QSY-12-10-20**	**20**
16	7	12	25	23	19.8	25	4.5	24	62.3	22.2	24.1	23.4	48	**190708**	**QSY-16-12**	**1**

* Packaging unit quantity

Push-in Y-connector QSY-...H
with push-in sleeve



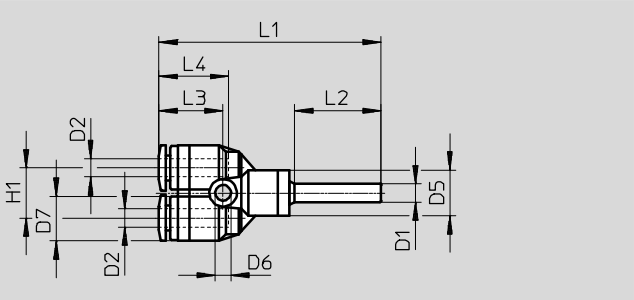

Dimensions and ordering data														
Push-in sleeve ∅ D1	Nominal size [mm]	Tubing O.D. D2	D5 ∅	D6 ∅	D7 ∅	H1	L1	L2	L3	L4	Weight/ piece [g]	Part No.	Type	PU*
4	1.6	4	10	3.2	10	11	48.7	19	14.1	14.9	6.5	**130628**	**QSY-4H**	**10**
Reducing														
6	2.3	4	10	3.2	10	11	50.9	22	14.1	14.9	6.8	**130633**	**QSY-6H-4**	**10**

* Packaging unit quantity

Push-in Y-connector QSY-...H-B
with push-in sleeve

No. of supply lines: 1
No. of outlets: 2

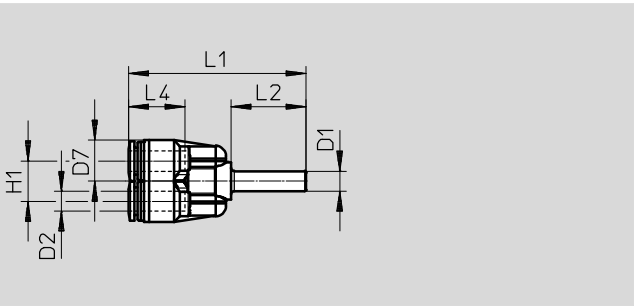

Dimensions and ordering data										
Push-in sleeve ∅ D1	Nominal size [mm]	For tubing O.D. D2	D7 ∅	H1	L1	L2	L4	Weight/ piece [g]	Part No.	Type	PU*
6	3.1	6	12.5	12	53.2	22.5	17	8.5	**133145**	**QSY-6H-B**	**10**
8	4.6	8	14.5	14	56.1	23.5	18.1	13	**133146**	**QSY-8H-B**	**10**
10	5.9	10	17.5	18	63.2	25	20.2	21	**133148**	**QSY-10H-B**	**10**
12	7.3	12	21	20	71.3	29	23.4	31	**133150**	**QSY-12H-B**	**10**
Reducing											
8	3.6	6	12.5	12	54.2	23.5	17	8.8	**133147**	**QSY-8H-6-B**	**10**
10	4.6	8	14.5	14	57.6	25	18.1	13	**133149**	**QSY-10H-8-B**	**10**
12	5.9	10	17.5	18	67.2	29	20.2	22	**133151**	**QSY-12H-10-B**	**10**

* Packaging unit quantity

Push-in Y-fitting QSYL
Orientable
Male thread with external hex


R thread

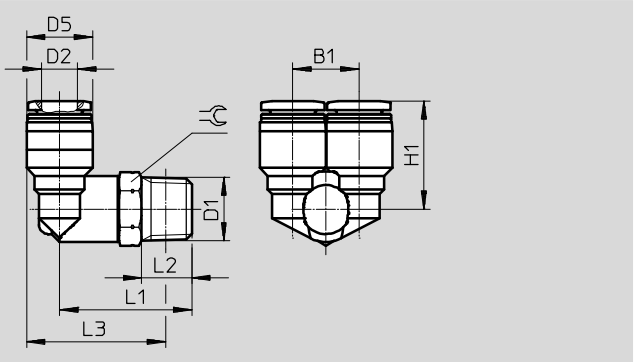


G thread

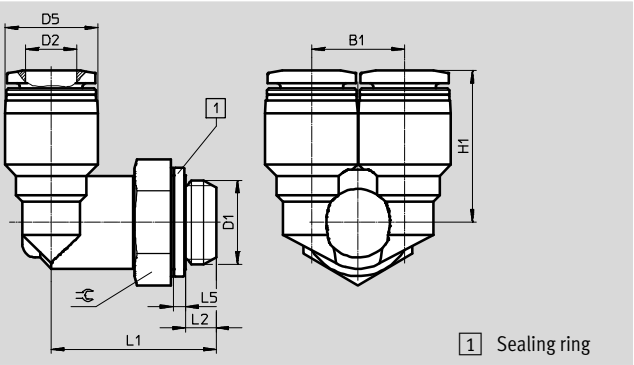

Dimensions and ordering data

Connection D1	Nominal size [mm]	Tubing O.D. D2	B1	D5 ∅	H1	L1	L2	L3	L5	⌀	Weight/ piece [g]	Part No.	Type	PU*
R thread														
R⅛	3.9	4	10.3	10	18.2	23	8	24	–	10	13	**153172**	**QSYL-⅛-4**	**1**
	4.2	6	12.5	12.5	19.8	23.5	8	25.8	–	10	15	**153173**	**QSYL-⅛-6**	**1**
	5.7	8	14.5	14.5	22.7	25	8	28.3	–	12	20	**153175**	**QSYL-⅛-8**	**1**
R¼	5.3	6	12.5	12.5	21.8	29	11	29.2	–	14	22	**153174**	**QSYL-¼-6**	**1**
	7.3	8	14.5	14.5	23.7	29	11	30.2	–	14	25	**153176**	**QSYL-¼-8**	**1**
	8	10	17.5	17.5	26	29.5	11	32.2	–	14	32	**153178**	**QSYL-¼-10**	**1**
R⅜	7.3	8	14.5	14.5	24.7	32	12	32.9	–	17	37	**153177**	**QSYL-⅜-8**	**1**
	9.2	10	17.5	17.5	27	32.5	12	34.9	–	17	43	**153179**	**QSYL-⅜-10**	**1**
	9.7	12	21	21	29.2	33.5	12	37.7	–	17	51	**153180**	**QSYL-⅜-12**	**1**
R½	10.6	12	21	21	30.2	38	15	40.3	–	21	74	**153181**	**QSYL-½-12**	**1**
G thread with sealing ring														
G⅛	3.9	4	10.3	10	18.2	22.1	4.2	–	1.9	13	16	**186189**	**QSYL-G⅛-4**	**1**
	4.2	6	12.5	12.5	19.8	22.6	4.2	–	1.9	13	18	**186190**	**QSYL-G⅛-6**	**1**
	5.7	8	14.5	14.5	22.7	23.1	4.2	–	1.9	13	20	**186192**	**QSYL-G⅛-8**	**1**
G¼	5.3	6	12.5	12.5	21.8	25.7	4.8	–	1.9	17	26	**186191**	**QSYL-G¼-6**	**1**
	7.3	8	14.5	14.5	23.7	25.7	4.8	–	1.9	17	29	**186193**	**QSYL-G¼-8**	**1**
	8	10	17.5	17.5	26	26.2	4.8	–	1.9	17	36	**186195**	**QSYL-G¼-10**	**1**
G⅜	7.3	8	14.5	14.5	24.7	28.2	5.8	–	2.4	19	38	**186194**	**QSYL-G⅜-8**	**1**
	9.2	10	17.5	17.5	27	28.7	5.8	–	2.4	19	45	**186196**	**QSYL-G⅜-10**	**1**
	9.7	12	21	21	29.2	29.7	5.8	–	2.4	19	52	**186197**	**QSYL-G⅜-12**	**1**
G½	10.6	12	21	21	30.2	33.7	6.8	–	2.4	24	80	**186198**	**QSYL-G½-12**	**1**

* Packaging unit quantity

Push-in Y-fitting QSYLV
Orientable
Male thread with external hex


R thread

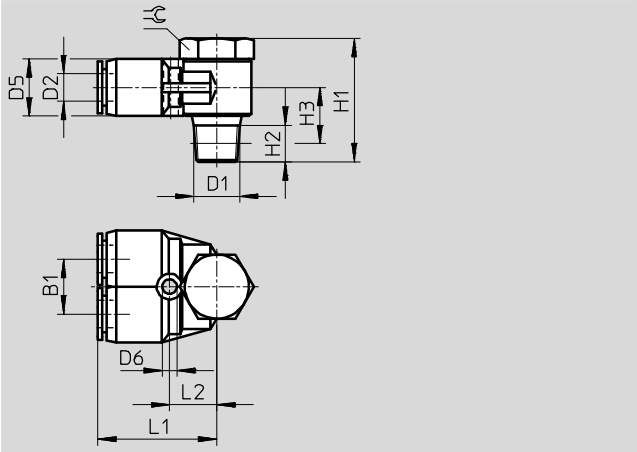


G thread

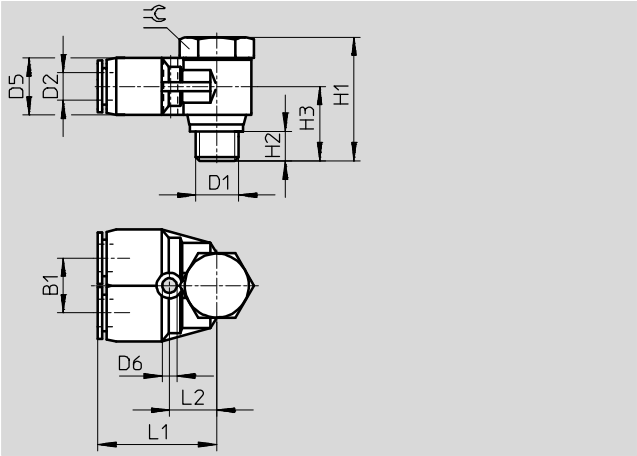

Dimensions and ordering data

Connection D1	Nominal size [mm]	Tubing O.D. D2	B1	D5 ∅	D6 ∅	H1	H2	H3	L1	L2	⫧	Weight/ piece [g]	Part No.	Type	PU*
R thread															
R⅛	3.3	6	12	12.5	3.2	27	8	11	26	10.5	14	24.5	**153192**	**QSYLV-⅛-6**	**1**
R¼	4.4	8	14	14.5	3.2	31.5	11	12.5	29	12.5	17	41.5	**153193**	**QSYLV-¼-8**	**1**
R⅜	5.7	10	17	17.5	4.2	36	12	14.5	33.5	15	21	69.5	**153194**	**QSYLV-⅜-10**	**1**
R½	7.1	12	20	21	4.2	40	15	17.5	37.5	17	24	102	**153195**	**QSYLV-½-12**	**1**
G thread with sealing ring															
G⅛	3.5	6	12	12.4	3.2	26.2	5.1	15.2	27.5	12	17	31	**186209**	**QSYLV-G⅛-6**	**1**
G¼	4.7	8	14	14.4	3.2	28.4	5.6	16.4	30.9	14	19	48	**186210**	**QSYLV-G¼-8**	**1**
G⅜	5.2	10	17	17.6	4.2	33.4	6.6	19.4	34	15.5	21	73	**186211**	**QSYLV-G⅜-10**	**1**
G½	7	12	20	21	4.2	37.4	7.6	21.9	38.9	18.5	27	123	**186212**	**QSYLV-G½-12**	**1**

* Packaging unit quantity

Push-in Y-fitting QSYTF
Orientable
Male and female thread with external hex


R thread

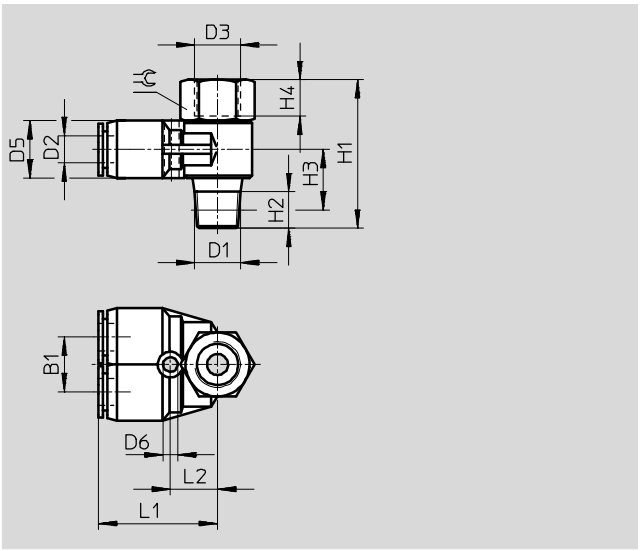


G thread

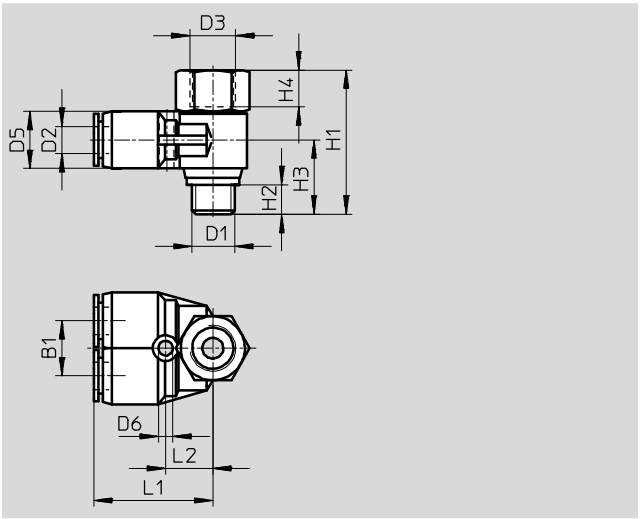

Dimensions and ordering data

Connection D1	Nominal size [mm]	Tubing O.D. D2	B1	D3 ∅	D5 ∅	D6 ∅	H1	H2	H3	H4	L1	L2	⌀	Weight/ piece [g]	Part No.	Type	PU*
R male thread and G thread female																	
R⅛	3.1	6	12	G⅛	12.4	3.5	32.5	8	12	7	26.2	10.7	14	27	**153196**	**QSYTF-⅛-6-B**	**1**
R¼	4.3	8	14	G¼	14.4	3.2	38.5	11	13.5	9	29.1	12.5	17	43	**153197**	**QSYTF-¼-8-B**	**1**
R⅜	5.5	10	17	G⅜	17.6	4.2	44.5	12	15.7	11	33.5	15	21	72	**153198**	**QSYTF-⅜-10-B**	**1**
R½	6.8	12	20	G½	21	4.2	52.2	13	16.5	14	37.4	17	24	109	**153199**	**QSYTF-½-12-B**	**1**
G male thread with sealing ring																	
G⅛	3.1	6	12	G⅛	12.4	3.2	29.2	5.1	15.2	7	27.5	12	17	32	**186213**	**QSYTF-G⅛-6**	**1**
G¼	4.3	8	14	G¼	14.4	3.2	32.9	5.6	16.4	9	30.9	14	19	47	**186214**	**QSYTF-G¼-8**	**1**
G⅜	5.5	10	17	G⅜	17.6	4.2	41.4	6.6	19.4	11	34	15.5	21	72	**186215**	**QSYTF-G⅜-10**	**1**
G½	6.8	12	20	G½	21	4.2	47.4	7.6	21.9	14	38.9	18.5	27	127	**186216**	**QSYTF-G½-12**	**1**

* Packaging unit quantity

Push-in fittings QSM-B, Quick Star, mini

Technical data

Push-in fitting QSM-B

Male thread with external hex



M thread

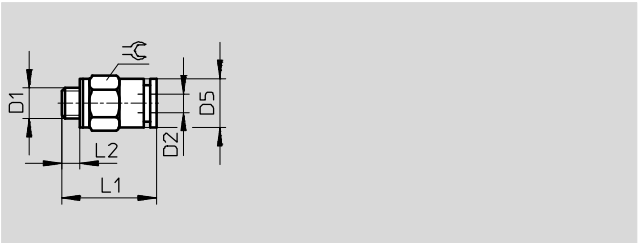



R thread

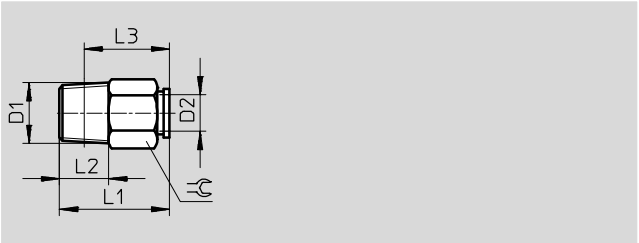

Dimensions and ordering data

Connection D1	Nominal size [mm]	Tubing O.D. D2	D5 ∅	L1	L2	L3	⇔	Weight/ piece [g]	Part No.	Type	PU*
Metric thread with sealing ring											
M3	0.9	3	6.0	13.3	2.5	–	5.5	1.1	**132102**	**QSM-B-M3-3-20**	**20**
	1.1	4	7.8	15.7	2.5	–	8	2.4	**130894**	**QSM-B-M3-4-20**	**20**
M5	2.0	3	7.8	16.2	3	–	8	3.5	**132103**	**QSM-B-M5-3-20**	**20**
	2.2	4	7.8	16.2	3	–	8	3.2	**130895**	**QSM-B-M5-4-20**	**20**
	2.1	6	9.8	17.3	3	–	10	4.5	**130896**	**QSM-B-M5-6-20**	**20**
R thread											
R⅛	2.9	4	7.8	16.2	8	12.3	10	6	**132104**	**QSM-B-⅛-4-20**	**20**
	4.5	6	9.8	17.9	8	14	10	6	**132105**	**QSM-B-⅛-6-20**	**20**

* Packaging unit quantity

Push-in fittings QSM-B, Quick Star, mini

Technical data

Push-in fitting QSM-B-...-I

Male thread with internal hex



M thread

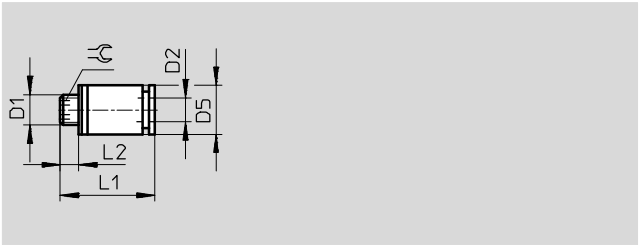



R thread

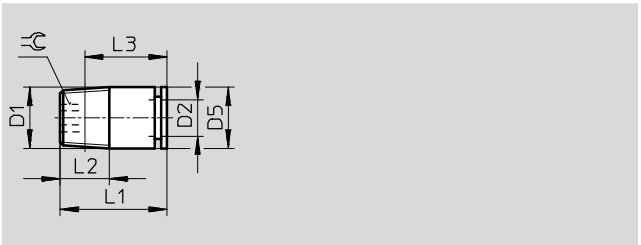

Dimensions and ordering data

Connection D1	Nominal size [mm]	Tubing O.D. D2	D5 ∅	L1	L2	L3	⌀	Weight/ piece [g]	Part No.	Type	PU*
Metric thread with sealing ring											
M3	1.6	3	8	15.7	2.5	–	1.5	2.3	**132116**	**QSM-B-M3-3-I-20**	**20**
	1.5	4	8	15.7	2.5	–	1.5	2.2	**130909**	**QSM-B-M3-4-I-20**	**20**
M5	1.9	3	8	16.2	3.0	–	2.0	3.3	**132117**	**QSM-B-M5-3-I-20**	**20**
	2.5	4	8	16.2	3.0	–	2.5	3	**130910**	**QSM-B-M5-4-I-20**	**20**
	2.6	6	9.8	17.8	3.0	–	2.5	4.4	**130911**	**QSM-B-M5-6-I-20**	**20**
M7	2.3	4	9.8	18.9	5.5	–	3.0	6	**130912**	**QSM-B-M7-4-I-20**	**20**
	2.9	6	9.8	20.9	5.5	–	4.0	6.4	**130913**	**QSM-B-M7-6-I-20**	**20**
R thread											
R⅛	3.1	4	10	16.4	8.0	12.5	3.0	6	**132118**	**QSM-B-⅛-4-I-20**	**20**
	4.1	6	10	18.2	8.0	14.3	4.0	6	**132119**	**QSM-B-⅛-6-I-20**	**20**

* Packaging unit quantity

Push-in fittings QSM-B, Quick Star, mini

Technical data

Push-in L-fitting QSML-B
Orientable
Male thread with external hex


M thread

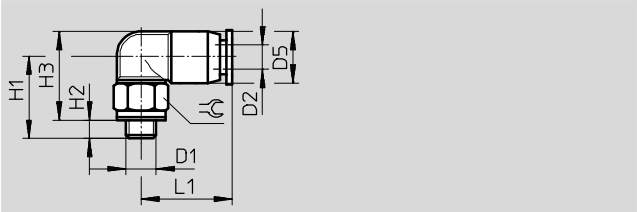


R thread

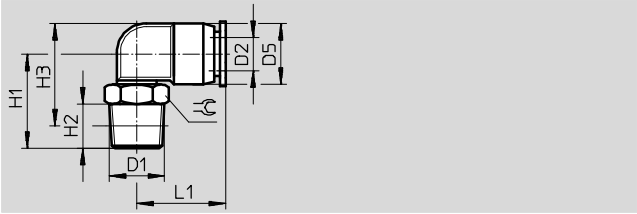

Dimensions and ordering data

Connection D1	Nominal size [mm]	Tubing O.D. D2	D5 ∅	H1	H2	H3	L1	⌀	Weight/ piece [g]	Part No.	Type	PU*
Metric thread with sealing ring												
M3	0.8	3	6	12	3.3	12.5	11	5.5	1.5	**132106**	**QSML-B-M3-3-20**	**20**
	1.3	4	8	14	2.5	15.5	15.7	8	3	**130899**	**QSML-B-M3-4-20**	**20**
M5	1.5	3	6	13.5	3.5	13.5	11	8	2.8	**132107**	**QSML-B-M5-3-20**	**20**
	1.7	4	8	13.5	3	14.5	15.7	8	3.4	**130900**	**QSML-B-M5-4-20**	**20**
	2.1	6	10.5	14.5	3	16.8	16.3	8	4.1	**130901**	**QSML-B-M5-6-20**	**20**
M7	2.0	4	8	17	5.5	15.5	15.7	10	5.6	**132108**	**QSML-B-M7-4-20**	**20**
	2.4	6	10.5	18	5.5	17.5	16.3	10	6.2	**132109**	**QSML-B-M7-6-20**	**20**
R thread												
R⅛	2.5	4	8	16	8	16.3	15.7	10	6	**132110**	**QSML-B-⅛-4-20**	**20**
	3.3	6	10.5	17	8	18.8	16.3	10	7	**132111**	**QSML-B-⅛-6-20**	**20**

* Packaging unit quantity

Push-in fittings QSM-B, Quick Star, mini

Technical data

Push-in T-fitting QSMT-B
Orientable
Male thread with external hex



M thread

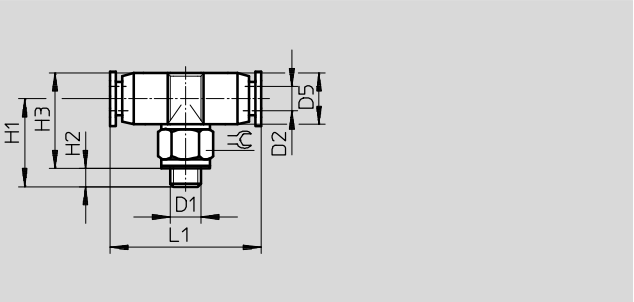



R thread

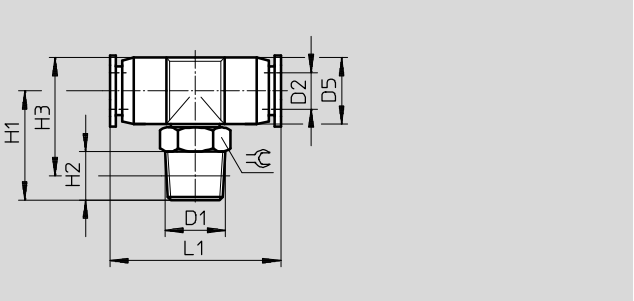

Dimensions and ordering data

Connection D1	Nominal size [mm]	Tubing O.D. D2	D5 ∅	H1	H2	H3	L1	⫧	Weight/ piece [g]	Part No.	Type	PU*
Metric thread with sealing ring												
M3	0.9	3	6	12	3.3	12.5	22	5.5	2	**132112**	**QSMT-B-M3-3-20**	**20**
	1.3	4	8	15	2.5	15.5	26.2	8	3.9	**130904**	**QSMT-B-M3-4-20**	**20**
M5	1.6	3	6	13,5	3	13.5	22	8	3.3	**132113**	**QSMT-B-M5-3-20**	**20**
	2.2	4	8	14.5	3	14.5	26.2	8	4.3	**130905**	**QSMT-B-M5-4-20**	**20**
	2.1	6	10.5	15.5	3	17.8	28.4	8	5.6	**130906**	**QSMT-B-M5-6-20**	**20**
R thread												
R⅛	2.4	4	8	17	8	17.1	26.2	10	7	**132114**	**QSMT-B-⅛-4-20**	**20**
	3.3	6	10.5	18	8	19.3	28.4	10	8	**132115**	**QSMT-B-⅛-6-20**	**20**

* Packaging unit quantity

Push-in fittings QS-B, Quick Star

Technical data

Push-in fitting QS-B

Male thread with external hex



R thread

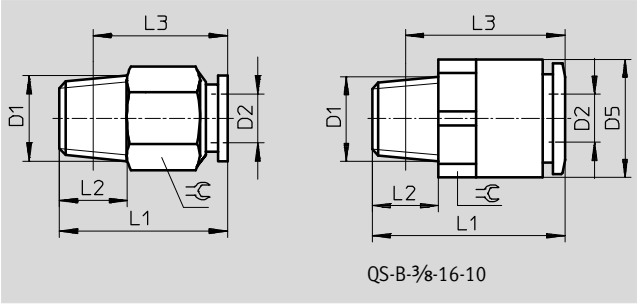

QS-B-3/8-16-10

Dimensions and ordering data											
Connection D1	Nominal size [mm]	Tubing O.D. D2	D5	L1	L2	L3	⌀	Weight/ piece [g]	Part No.	Type	PU*
R thread											
R1/8	2.6	4	–	21	8	17	10	8.3	**130914**	**QS-B-1/8-4-20**	**20**
	4	6	–	22.6	8	18.6	12	9.3	**130915**	**QS-B-1/8-6-20**	**20**
	5	8	–	27.9	8	23.9	14	16	**130916**	**QS-B-1/8-8-20**	**20**
	5.4	10	–	30.3	8	26.4	17	22.5	**132120**	**QS-B-x-10-20**	**20**
R1/4	2.6	4	–	21	11	15	14	16	**130917**	**QS-B-1/4-4-20**	**20**
	4	6	–	24.6	11	18.5	14	18	**130918**	**QS-B-1/4-6-20**	**20**
	5	8	–	26.6	11	20.6	14	16	**130919**	**QS-B-1/4-8-20**	**20**
	6.7	10	–	29.8	11	23.8	17	20	**132121**	**QS-B-1/4-10-20**	**20**
	8.7	12	–	35.9	11	29.9	21	43.7	**132122**	**QS-B-1/4-12-20**	**20**
R3/8	4	6	–	23.6	12	17.2	17	28	**130920**	**QS-B-3/8-6-10**	**10**
	5	8	–	23.9	12	17.6	17	24	**130921**	**QS-B-3/8-8-10**	**10**
	6.7	10	–	29.3	12	23	17	27	**130922**	**QS-B-3/8-10-10**	**10**
	8.7	12	–	31.9	12	25.6	21	35.5	**132123**	**QS-B-3/8-12-10**	**10**
	10.3	16	23.8	41.9	12	34.8	22	59.5	**132124**	**QS-B-3/8-16-10**	**10**
R1/2	6.7	10	–	30.3	15	22.1	21	50	**130924**	**QS-B-1/2-10-10**	**10**
	8.7	12	–	33.9	15	25.7	21	50	**130925**	**QS-B-1/2-12-10**	**10**
	12	16	–	41.3	15	33.2	24	67	**132125**	**QS-B-1/2-16-10**	**10**

* Packaging unit quantity

Push-in fittings QS-B, Quick Star

Technical data

Push-in fitting QS-B-...-I

Male thread with internal hex



R thread

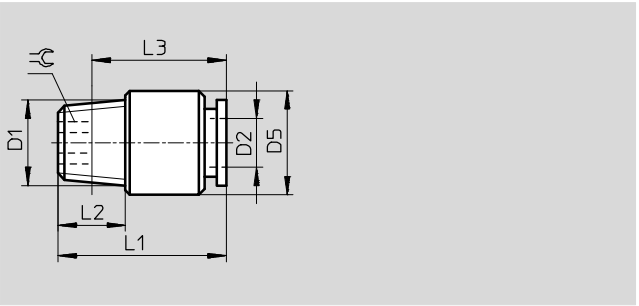

Dimensions and ordering data

Connection D1	Nominal size [mm]	Tubing O.D. D2	D5 ∅	L1	L2	L3	⌀	Weight/ piece [g]	Part No.	Type	PU*
R thread											
R⅛	2.1	4	9.7	21	8	17	2.5	7.6	**130990**	**QS-B-⅛-4-I-20**	**20**
	3.7	6	11.8	22.6	8	18.6	4	8.1	**130991**	**QS-B-⅛-6-I-20**	**20**
	4.7	8	13.7	27.9	8	23.9	5	14	**130992**	**QS-B-⅛-8-I-20**	**20**
	5	10	17.7	30.3	8	26.4	5	25	**132151**	**QS-B-⅛-10-I-20**	**20**
R¼	3.7	6	14	22.6	11	16.5	4	15	**130994**	**QS-B-¼-6-I-20**	**20**
	5	8	14	26.6	11	20.6	6	15	**130995**	**QS-B-¼-8-I-20**	**20**
	5	10	17.7	29.8	11	23.8	7	22	**132152**	**QS-B-¼-10-I-20**	**20**
	6.8	12	20.8	35.9	11	29.9	6	40	**132153**	**QS-B-¼-12-I-20**	**20**
R⅜	5	8	16.8	23.9	12	17.6	6	23	**130997**	**QS-B-⅜-8-I-10**	**10**
	5	10	17.8	29.3	12	23	6	28	**130998**	**QS-B-⅜-10-I-10**	**10**
	7.1	12	20.8	31.9	12	25.6	8	33.5	**132154**	**QS-B-⅜-12-I-10**	**10**
R½	5	10	20.8	30.3	15	22.1	6	49	**132000**	**QS-B-½-10-I-10**	**10**
	7.1	12	20.8	33.9	15	25.7	8	49	**132001**	**QS-B-½-12-I-10**	**10**

* Packaging unit quantity

Push-in fittings QS-B, Quick Star

Technical data

Push-in connector QS-B



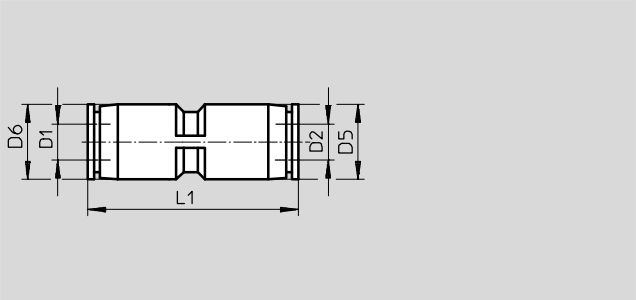

Dimensions and ordering data									
Tubing O.D. D1	Nominal size [mm]	Tubing O.D. D2	D5 ∅	D6	L1	Weight/ piece [g]	Part No.	Type	PU*
4	2.2	4	10	–	30.8	4.6	**130964**	**QS-B-4-20**	**20**
6	3.7	6	12.5	–	34.9	6.2	**130965**	**QS-B-6-20**	**20**
8	5.2	8	14.5	–	37.8	8.9	**130966**	**QS-B-8-20**	**20**
10	6.8	10	17.5	–	41.4	15	**130967**	**QS-B-10-10**	**10**
12	8.2	12	21	–	47.8	22	**130968**	**QS-B-12-10**	**10**
16	13.7	16	25	–	49.4	25	**132144**	**QS-B-16-10**	**10**
Reducing									
6	2.3	4	12.5	12.5	34.4	6.1	**130969**	**QS-B-6-4-20**	**20**
8	2.3	4	10.7	14.5	36.6	7.1	**132145**	**QS-B-8-4-20**	**20**
	3.3	6	14.5	14.5	37.9	8.4	**130970**	**QS-B-8-6-20**	**20**
10	3.7	6	13	17.5	39.8	11	**132146**	**QS-B-10-6-20**	**20**
	5.2	8	17.5	17.5	41.1	14	**130971**	**QS-B-10-8-10**	**10**
12	5.3	8	14.5	21	44	16	**132147**	**QS-B-12-8-10**	**10**
	6.9	10	21	21	47.6	21	**130972**	**QS-B-12-10-10**	**10**

* Packaging unit quantity

Push-in fittings QS-B, Quick Star

Technical data

Push-in L-fitting QSL-B
Orientable
Male thread with external hex


R thread

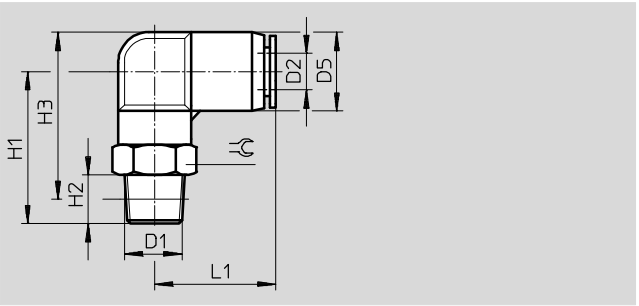

Dimensions and ordering data

Connection D1	Nominal size [mm]	Tubing O.D. D2	D5 ∅	H1	H2	H3	L1	⇄	Weight/ piece [g]	Part No.	Type	PU*
R thread												
R1/8	2	4	10	18.9	8	19.9	16.8	10	7.4	**130926**	**QSL-B-1/8-4-20**	**20**
	3.2	6	12.5	19.5	8	21.8	19.7	10	8.4	**130927**	**QSL-B-1/8-6-20**	**20**
	4.6	8	14.5	24.2	8	27.5	21.9	12	12.6	**130928**	**QSL-B-1/8-8-20**	**20**
	4.9	10	17.5	26.1	8	30.9	25	12	16.2	**132126**	**QSL-B-1/8-10-20**	**20**
R1/4	2	4	10	24.4	11	23.4	16.8	14	14.2	**130929**	**QSL-B-1/4-4-20**	**20**
	3.2	6	12.5	26	11	26.2	19.7	14	15.3	**130930**	**QSL-B-1/4-6-20**	**20**
	4.8	8	14.5	27.2	11	28.4	21.9	14	17	**130931**	**QSL-B-1/4-8-20**	**20**
	6.1	10	17.5	28.1	11	30.8	25	14	20.3	**132127**	**QSL-B-1/4-10-20**	**20**
	6.4	12	21	29.8	11	34.3	29.2	14	24.8	**132128**	**QSL-B-1/4-12-20**	**20**
R3/8	3.2	6	12.5	26.5	12	26.4	19.7	17	22.3	**130932**	**QSL-B-3/8-6-10**	**10**
	4.8	8	14.5	27.7	12	28.6	21.9	17	24	**130933**	**QSL-B-3/8-8-10**	**10**
	6.3	10	17.5	29.6	12	32	25	17	27.4	**130934**	**QSL-B-3/8-10-10**	**10**
	7	12	21	31.3	12	35.5	29.2	17	31.6	**132129**	**QSL-B-3/8-12-10**	**10**
	10.1	16	25	47	11	53.2	33.1	22	74	**132130**	**QSL-B-3/8-16-10**	**10**
R1/2	6.3	10	17.5	32.6	15	33.2	25	21	44.6	**130936**	**QSL-B-1/2-10-10**	**10**
	7.5	12	21	34.3	15	36.6	29.2	21	48.5	**130937**	**QSL-B-1/2-12-10**	**10**
	10.9	16	25	51	15	55.4	33.1	22	79	**132131**	**QSL-B-1/2-16-10**	**10**

* Packaging unit quantity

Push-in long L-fitting QSLL-B
Orientable
Male thread with external hex


R thread

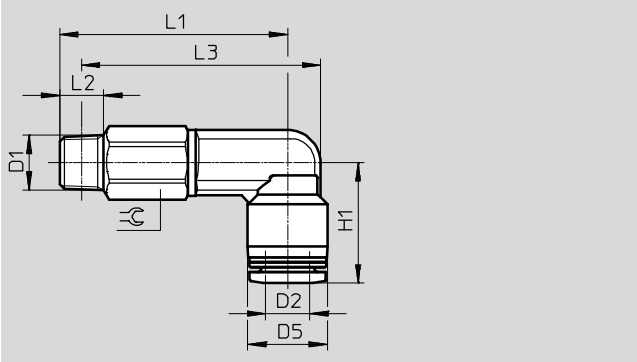

Dimensions and ordering data

Connection D1	Nominal size [mm]	Tubing O.D. D2	D5 ∅	H1	L1	L2	L3	⫷	Weight/ piece [g]	Part No.	Type	PU*
R thread												
R1/8	2	4	10	16.8	31.7	8	32.7	10	12.3	**132002**	**QSLL-B-1/8-4-20**	**20**
	3.2	6	12.5	19.7	34.8	8	37.1	10	12.9	**132003**	**QSLL-B-1/8-6-20**	**20**
	4.2	8	14.5	21.9	41.5	8	44.8	12	20.3	**132004**	**QSLL-B-1/8-8-20**	**20**
R1/4	2	4	10	16.8	38.1	11	37.1	14	24.5	**132155**	**QSLL-B-1/4-4-20**	**20**
	3.2	6	12.5	19.7	42.2	11	42.4	14	25.9	**132006**	**QSLL-B-1/4-6-20**	**20**
	4.5	8	14.5	21.9	45.4	11	46.6	14	27.9	**132007**	**QSLL-B-1/4-8-20**	**20**
	6	10	17.5	25.0	49.3	11	52.0	14	31.6	**132156**	**QSLL-B-1/4-10-20**	**20**
R3/8	3.2	6	12.5	19.7	42.7	12	42.6	17	38.8	**132008**	**QSLL-B-3/8-6-10**	**10**
	4.7	8	14.5	21.9	45.9	12	46.8	17	40.9	**132009**	**QSLL-B-3/8-8-10**	**10**
	6.1	10	17.5	25.0	50.8	12	53.2	17	44.6	**132010**	**QSLL-B-3/8-10-10**	**10**
	6.8	12	21	29.2	56.0	12	60.2	17	49.3	**132157**	**QSLL-B-3/8-12-10**	**10**
R1/2	6.1	10	17.5	25.0	54.7	15	55.3	21	77.2	**132012**	**QSLL-B-1/2-10-10**	**10**
	7.5	12	21	29.2	59.9	15	62.2	21	81.4	**132013**	**QSLL-B-1/2-12-10**	**10**

* Packaging unit quantity

Push-in L-connector QSL-B



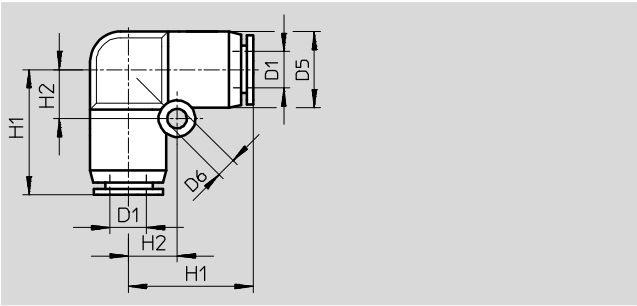

Dimensions and ordering data

Tubing O.D. D1	Nominal size [mm]	D5 ∅	D6 ∅	H1	H2	Weight/ piece [g]	Part No.	Type	PU*
4	1,9	10	3.2	17.2	7	5	**130950**	**QSL-B-4-20**	**20**
6	3.2	12.5	3.2	20.5	8	6.9	**130951**	**QSL-B-6-20**	**20**
8	4.8	14.5	4.2	22.9	9.5	9.9	**130952**	**QSL-B-8-20**	**20**
10	6.3	17.5	4.2	26.2	11	17	**130953**	**QSL-B-10-10**	**10**
12	7.5	21	4.2	30.5	12.5	24	**130954**	**QSL-B-12-10**	**10**
16	10.8	25	4.2	33.1	12	30	**132138**	**QSL-B-16-10**	**10**

* Packaging unit quantity

Push-in T-fitting QST-B
Orientable
Male thread with external hex


R thread

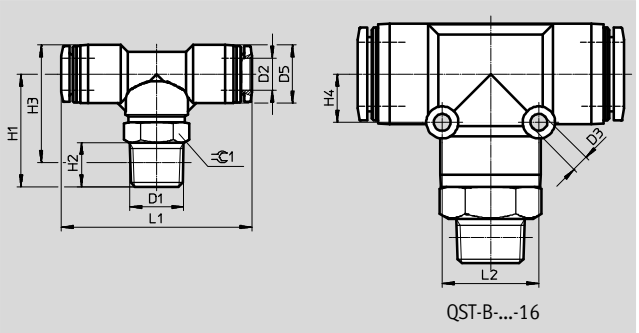

QST-B-...-16

Dimensions and ordering data

Connection D1	Nominal size [mm]	Tubing O.D. D2	D3 ∅	D5 ∅	H1	H2	H3	H4	L1	L2	⇔ 1	Weight/ piece [g]	Part No.	Type	PU*
R thread															
R1/8	2	4	–	10	18.9	8	19.9	–	33.6	–	10	9.8	**130938**	**QST-B-1/8-4-20**	**20**
	3.2	6	–	12.5	19.5	8	21.8	–	39.3	–	10	11.6	**130939**	**QST-B-1/8-6-20**	**20**
	4.6	8	–	14.5	24.2	8	27.5	–	43.8	–	12	17.2	**130940**	**QST-B-1/8-8-20**	**20**
	4.9	10	–	17.5	26.1	8	30.9	–	50.0	–	12	24.1	**132132**	**QST-B-1/8-10-20**	**20**
R1/4	2	4	–	10	24.4	11	23.4	–	33.6	–	14	16.5	**130941**	**QST-B-1/4-4-20**	**20**
	3.2	6	–	12.5	26.0	11	26.2	–	39.3	–	14	18.5	**130942**	**QST-B-1/4-6-20**	**20**
	4.8	8	–	14.5	27.2	11	28.4	–	43.8	–	14	21.6	**130943**	**QST-B-1/4-8-20**	**20**
	6.1	10	–	17.5	28.1	11	30.8	–	50.0	–	14	28.1	**132133**	**QST-B-1/4-10-20**	**20**
	6.4	12	–	21	29.8	11	34.3	–	58.4	–	14	35.8	**132134**	**QST-B-1/4-12-20**	**20**
R3/8	3.2	6	–	12.5	26.5	12	26.4	–	39.3	–	17	25.5	**130944**	**QST-B-3/8-6-10**	**10**
	4.8	8	–	14.5	27.7	12	28.6	–	43.8	–	17	28.6	**130945**	**QST-B-3/8-8-10**	**10**
	6.3	10	–	17.5	29.6	12	32.0	–	50.0	–	17	35.2	**130946**	**QST-B-3/8-10-10**	**10**
	7	12	–	21	31.3	12	35.5	–	58.4	–	17	42.8	**132135**	**QST-B-3/8-12-10**	**10**
	10.1	16	4.2	25	47	11	53.2	12	66.2	24	22	89	**132136**	**QST-B-3/8-16-10**	**10**
R1/2	6.3	10	–	17.5	32.6	15	33.2	–	50.0	–	21	52.6	**130948**	**QST-B-1/2-10-10**	**10**
	7.5	12	–	21	34.3	15	36.6	–	58.4	–	21	60	**130949**	**QST-B-1/2-12-10**	**10**
	10.8	16	4.2	25	51	15	55.4	12	66.2	24	22	93	**132137**	**QST-B-1/2-16-10**	**10**

* Packaging unit quantity

Push-in T-connector QST-B



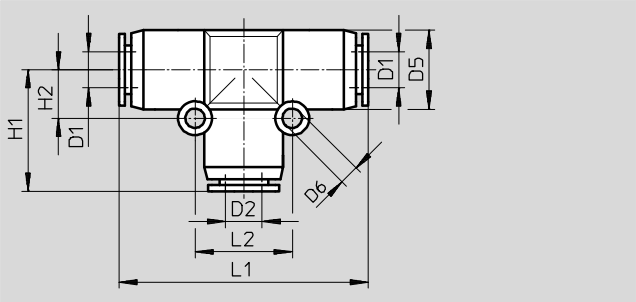

Dimensions and ordering data

Tubing O.D. D1	Nominal size [mm]	Tubing O.D. D2	D5 ∅	D6 ∅	H1	H2	L1	L2	Weight/ piece [g]	Part No.	Type	PU*
4	2	4	10	3.2	17.2	6.5	34.4	13	7.4	**130973**	**QST-B-4-20**	**20**
6	3.3	6	12.5	3.2	20.5	8	41	16	11	**130974**	**QST-B-6-20**	**20**
8	4.8	8	14.5	3.2	22.9	9	45.8	18	15	**130975**	**QST-B-8-20**	**20**
10	6.2	10	17.5	4.2	26.2	12	52.4	24	25	**130976**	**QST-B-10-10**	**10**
12	7.6	12	21	4.2	30.5	14	61	28	36	**130977**	**QST-B-12-10**	**10**
16	10.7	16	25	4.2	33.1	12	66.2	24	43.5	**132148**	**QST-B-16-10**	**10**

* Packaging unit quantity

Push-in T-fitting QSTL-B
Orientable
Male thread with external hex


R thread

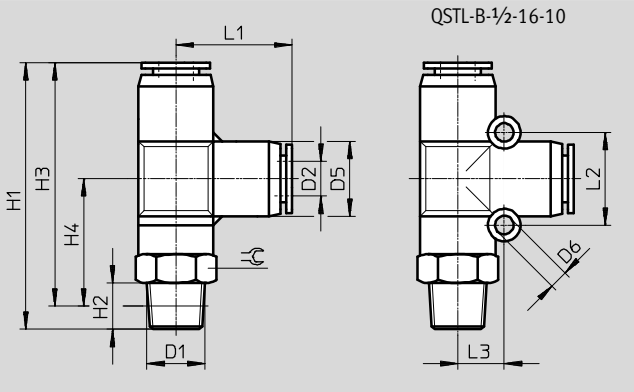

Dimensions and ordering data

Connection D1	Nominal size [mm]	Tubing O.D. D2	D5 ∅	D6	H1	H2	H3	H4	L1	L2	L3	⌀	Weight/ piece [g]	Part No.	Type	PU*
R thread																
R⅛	2	4	10	–	36.1	8	32.1	14.9	16.8	–	–	10	9.8	**130978**	**QSTL-B-⅛-4-20**	**20**
	3.2	6	12.5	–	40.0	8	36.0	15.5	19.7	–	–	10	11.6	**130979**	**QSTL-B-⅛-6-20**	**20**
	4.6	8	14.5	–	46.6	8	42.6	20.2	21.9	–	–	14	17.3	**130980**	**QSTL-B-⅛-8-20**	**20**
R¼	2	4	10	–	41.6	11	35.6	18.4	16.8	–	–	14	16.6	**130981**	**QSTL-B-¼-4-20**	**20**
	3.2	6	12.5	–	46.5	11	40.4	20.0	19.7	–	–	14	18.5	**130982**	**QSTL-B-¼-6-20**	**20**
	4.8	8	14.5	–	49.6	11	43.6	21.2	21.9	–	–	14	21.8	**130983**	**QSTL-B-¼-8-20**	**20**
R⅜	3.2	6	12.5	–	47.0	12	40.6	20.2	19.7	–	–	17	25.4	**130984**	**QSTL-B-⅜-6-10**	**10**
	4.8	8	14.5	–	50.1	12	43.8	21.4	21.9	–	–	17	28.6	**130985**	**QSTL-B-⅜-8-10**	**10**
	6.3	10	17.5	–	55.1	12	48.8	23.3	25.0	–	–	17	35.2	**130986**	**QSTL-B-⅜-10-10**	**10**
	7	12	21	–	61.4	12	55.1	25.0	29.2	–	–	17	42.8	**132149**	**QSTL-B-⅜-12-10**	**10**
R½	6.3	10	17.5	–	58.1	15	49.9	24.4	25.0	–	–	21	52.6	**130988**	**QSTL-B-½-10-10**	**10**
	7.5	12	21	–	64.4	15	56.2	26.1	29.2	–	–	21	60.4	**130989**	**QSTL-B-½-12-10**	**10**
	10.9	16	25	4.2	84.1	15	76.0	42.9	33.1	24	12	22	93	**132150**	**QSTL-B-½-16-10**	**10**

* Packaging unit quantity

Push-in fittings QS-B, Quick Star

Technical data

Push-in Y-fitting QSY-B
Orientable
Male thread with external hex



M thread

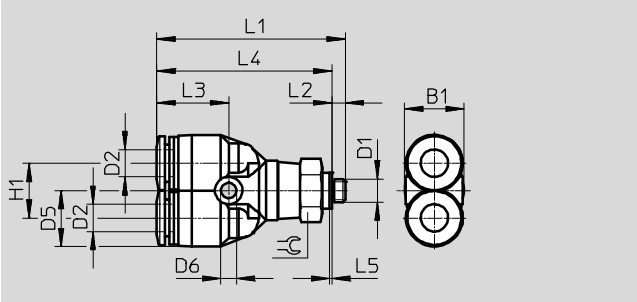



R thread

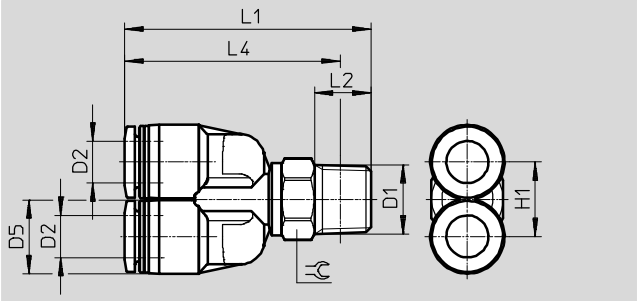

Dimensions and ordering data

Connection D1	Nominal size [mm]	Tubing O.D. D2	B1	D5 ∅	D6 ∅	H1	L1	L2	L3	L4	L5	⫷	Weight/ piece [g]	Part No.	Type	PU*
Metric thread with sealing ring																
M5	1.4	4	10.4	10	3.2	11	37.6	3	14.1	34.6	0.5	10	11	**132158**	**QSY-B-M5-4-20**	**20**
	1.4	6	13.5	12.5	3.4	12	41.4	3	15.8	38.4	0.5	12	16	**132159**	**QSY-B-M5-6-20**	**20**
R thread																
R⅛	2	4	–	10	–	10.3	36.1	8	–	32.1	–	10	10.2	**132014**	**QSY-B-⅛-4-20**	**20**
	3.2	6	–	12.5	–	12.5	42.1	8	–	38.1	–	12	14.8	**132015**	**QSY-B-⅛-6-20**	**20**
	4.2	8	–	14.5	–	14.5	46.0	8	–	42.0	–	12	18.5	**132016**	**QSY-B-⅛-8-20**	**20**
R¼	2	4	–	10	–	10.3	41.6	11	–	35.6	–	14	17	**132017**	**QSY-B-¼-4-20**	**20**
	3.2	6	–	12.5	–	12.5	44.1	11	–	38.0	–	14	18.9	**132018**	**QSY-B-¼-6-20**	**20**
	4.5	8	–	14.5	–	14.5	48.0	11	–	42.0	–	14	22.7	**132019**	**QSY-B-¼-8-20**	**20**
	5.5	10	–	17.5	–	17.5	51.2	11	–	45.2	–	14	29.5	**132160**	**QSY-B-¼-10-20**	**20**
R⅜	3.2	6	–	12.5	–	12.5	44.6	12	–	38.2	–	17	25.9	**132020**	**QSY-B-⅜-6-10**	**10**
	4.7	8	–	14.5	–	14.5	48.5	12	–	42.2	–	17	29.7	**132021**	**QSY-B-⅜-8-10**	**10**
	5.5	10	–	17.5	–	17.5	51.7	12	–	45.4	–	17	36.4	**132022**	**QSY-B-⅜-10-10**	**10**
	6.4	12	–	21	–	21	56.9	12	–	50.6	–	17	45	**132161**	**QSY-B-⅜-12-10**	**10**
R½	5.5	10	–	17.5	–	17.5	54.7	15	–	46.5	–	21	53.8	**132024**	**QSY-B-½-10-10**	**10**
	6.4	12	–	21	–	21	59.9	15	–	51.7	–	21	62.3	**132025**	**QSY-B-½-12-10**	**10**

* Packaging unit quantity

Push-in Y-connector QSY-B



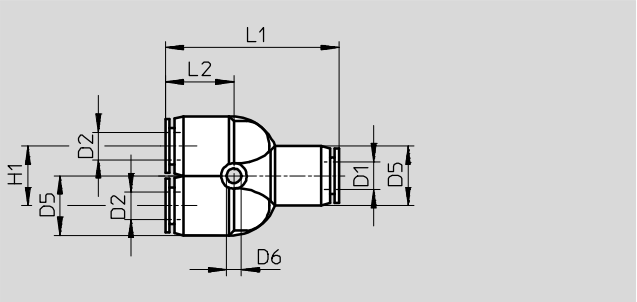

2 reducing outlets



Reducing

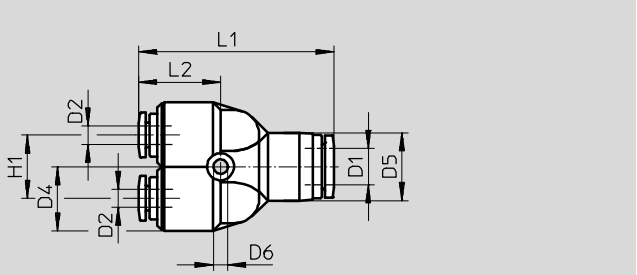

Dimensions and ordering data												
Tubing O.D. D1	Nominal size [mm]	Tubing O.D. D2	D4 ∅	D5 ∅	D6 ∅	H1	L1	L2	Weight/ piece [g]	Part No.	Type	PU*
4	1.6	4	–	10	3.2	11	32.8	14.2	7.3	**130955**	**QSY-B-4-20**	**20**
6	2.9	6	–	13	3.2	12	37.7	15.8	9.8	**130956**	**QSY-B-6-20**	**20**
8	4.3	8	–	15	3.2	14	42.4	17.2	15	**130957**	**QSY-B-8-20**	**20**
10	5.6	10	–	18	4.2	18	48.4	19.5	25	**130958**	**QSY-B-10-10**	**10**
12	6.7	12	–	21.5	4.2	20	54.8	22.2	35	**130959**	**QSY-B-12-10**	**10**
16	8.5	16	–	25	4.5	24	62.2	22.1	45	**132139**	**QSY-B-16-10**	**10**
Reducing												
6	2.1	4	12.5	12.5	3.2	12	37.2	15.2	9.6	**130960**	**QSY-B-6-4-20**	**20**
8	2.2	4	12.5	14.5	3.2	14	41.9	16.7	13	**132140**	**QSY-B-8-4-20**	**20**
	3.6	6	12.5	14.5	3.2	14	42.5	17.3	13	**130961**	**QSY-B-8-6-20**	**20**
10	3.6	6	14.5	17.5	4.2	18	48.2	17.3	19	**132141**	**QSY-B-10-6-10**	**10**
	4.6	8	14.5	17.5	4.2	18	48.1	19.2	20	**130962**	**QSY-B-10-8-10**	**10**
12	5	8	17.5	21	4.2	20	54.3	21.7	28	**132142**	**QSY-B-12-8-10**	**10**
	6.3	10	17.5	21	4.2	20	54.6	22	30	**130963**	**QSY-B-12-10-10**	**10**
16	7.1	12	25	25	4.5	24	62.3	22.2	48	**132143**	**QSY-B-16-12-10**	**10**

* Packaging unit quantity

Push-in fittings QS-V0, Quick Star, flame-retardant

Technical data

Push-in fitting QS-V0

Male thread with external hex



R thread

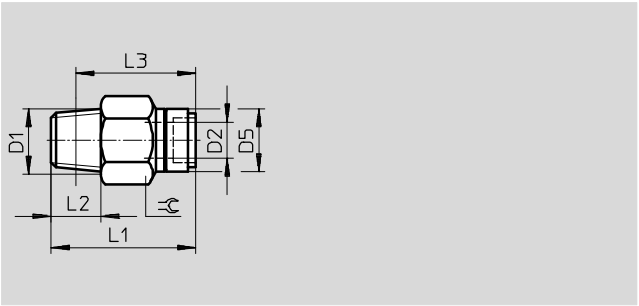



G thread

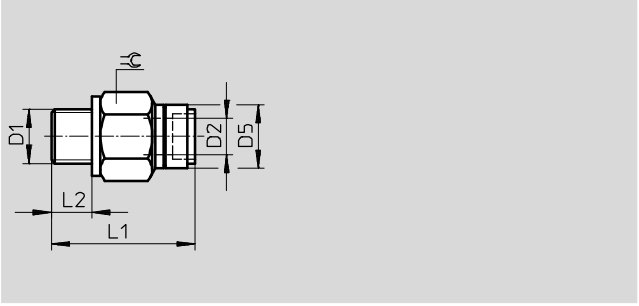

Dimensions and ordering data

Connection D1	Nominal size [mm]	Tubing O.D. D2	D5 ∅	L1	L2	L3	⌀	Weight/ piece [g]	Part No.	Type	PU*
R thread											
R⅛	2.6	4	12	26.1	8	22.1	10	8.7	**132888**	**QS-V0-⅛-4**	**10**
	4	6	14	28	8	24	12	10	**160500**	**QS-V0-⅛-6**	**10**
	5	8	16	33.5	8	29.5	14	16.5	**160501**	**QS-V0-⅛-8**	**10**
R¼	4	6	14	30	11	24	14	18	**160502**	**QS-V0-¼-6**	**10**
	5	8	16	32	11	26	14	16.5	**160503**	**QS-V0-¼-8**	**10**
	6.7	10	19	35.5	11	29.5	17	21.5	**160504**	**QS-V0-¼-10**	**10**
	6.7	12	22	40.9	11	34.9	21	45	**160505**	**QS-V0-¼-12**	**10**
R⅜	5	8	16	29.5	12	23	17	25	**160506**	**QS-V0-⅜-8**	**10**
	6.7	10	19	35	12	28.5	17	27.5	**160507**	**QS-V0-⅜-10**	**1**
	8.7	12	22	36.9	12	30.6	21	37	**160508**	**QS-V0-⅜-12**	**1**
R½	6.7	10	19	36	15	28	21	50.5	**160509**	**QS-V0-½-10**	**1**
	8.7	12	22	38.9	15	30.7	21	51	**160510**	**QS-V0-½-12**	**1**
G thread with sealing ring											
G⅛	4	6	14	26.6	5.1	–	13	9.8	**186314**	**QS-V0-G⅛-6**	**10**
	5	8	16	31.9	5.1	–	14	15	**186315**	**QS-V0-G⅛-8**	**10**
G¼	4	6	14	27.1	5.6	–	17	19	**186316**	**QS-V0-G¼-6**	**10**
	5	8	16	27.9	5.6	–	17	17	**186317**	**QS-V0-G¼-8**	**10**
	6.7	10	19	34.9	5.6	–	17	23	**186318**	**QS-V0-G¼-10**	**10**
	6.7	12	22	39.9	5.6	–	21	52	**186319**	**QS-V0-G¼-12**	**10**
G⅜	5	8	16	27.6	6.6	–	19	25	**186320**	**QS-V0-G⅜-8**	**10**
	6.7	10	19	31.4	6.6	–	19	26	**186321**	**QS-V0-G⅜-10**	**10**
	8.7	12	22	37.3	6.6	–	21	39	**186322**	**QS-V0-G⅜-12**	**10**
G½	6.7	10	19	32	7.6	–	24	53	**186323**	**QS-V0-G½-10**	**1**
	8.7	12	22	33.8	7.6	–	24	48	**186324**	**QS-V0-G½-12**	**1**

* Packaging unit quantity

Push-in fittings QS-V0, Quick Star, flame-retardant

Technical data

Push-in connector QS-V0



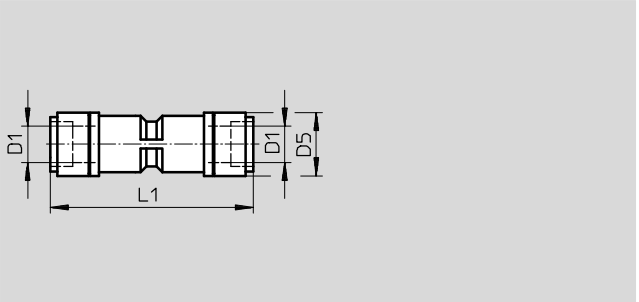

Dimensions and ordering data

Tubing O.D. D1	Nominal size [mm]	D5	L1	Weight/piece [g]	Part No.	Type	PU*
4	2.6	12	41	6	**132890**	**QS-V0-4**	**10**
6	4	14	45.1	7.9	**160546**	**QS-V0-6**	**10**
8	5	16	48.2	11	**160547**	**QS-V0-8**	**10**
10	6.7	19	53.8	18	**160548**	**QS-V0-10**	**10**
12	8.7	22.2	57.8	26	**160549**	**QS-V0-12**	**10**

* Packaging unit quantity

Push-in fittings QS-V0, Quick Star, flame-retardant

Technical data

Push-in L-fitting QSL-V0

Male thread with external hex



R thread

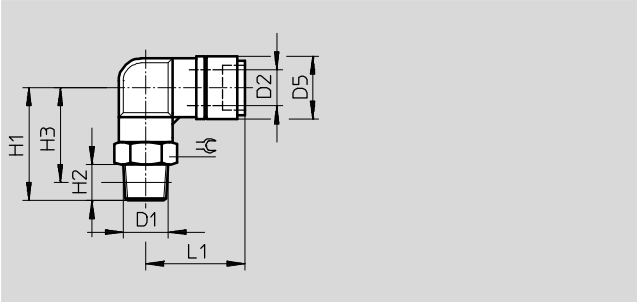



G thread

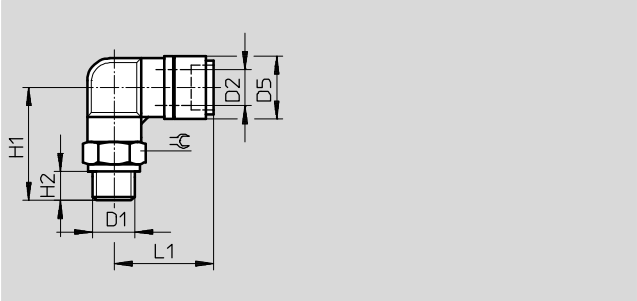

Dimensions and ordering data

Connection D1	Nominal size [mm]	Tubing O.D. D2	D5 ∅	H1	H2	H3	L1	⌀	Weight/ piece [g]	Part No.	Type	PU*
R thread												
R⅛	2.3	4	12	23.3	8	19.3	23.1	10	12	**132891**	**QSL-V0-⅛-4**	**10**
	3.6	6	14	25	8	21.1	24.9	12	15	**160511**	**QSL-V0-⅛-6**	**10**
	4.6	8	16	28	8	24.1	27.9	14	19	**160512**	**QSL-V0-⅛-8**	**10**
R¼	3.6	6	14	28	11	22	24.9	14	23	**160513**	**QSL-V0-¼-6**	**10**
	4.6	8	16	31	11	25	27.9	14	25	**160514**	**QSL-V0-¼-8**	**10**
	6.2	10	19	36	11	30	31.4	17	36	**160515**	**QSL-V0-¼-10**	**10**
	6.2	12	22.2	38	11	32	34.4	21	54	**160516**	**QSL-V0-¼-12**	**1**
R⅜	4.6	8	16	32.8	12	26.5	27.9	17	38	**160517**	**QSL-V0-⅜-8**	**10**
	6.2	10	19	37	12	30.7	31.4	17	45	**160518**	**QSL-V0-⅜-10**	**10**
	7.7	12	22.2	39	12	32.7	34.4	21	54	**160519**	**QSL-V0-⅜-12**	**1**
R½	6.2	10	19	40	15	31.9	31.4	21	47	**160520**	**QSL-V0-½-10**	**1**
	7.7	12	22.2	42	15	33.9	34.4	21	70	**160521**	**QSL-V0-½-12**	**1**
G thread with sealing ring												
G⅛	3.6	6	14	24	5.1	–	24.9	13	15	**186325**	**QSL-V0-G⅛-6**	**10**
	4.6	8	16	27	5.1	–	27.9	14	19	**186326**	**QSL-V0-G⅛-8**	**10**
G¼	3.6	6	14	25.5	5.6	–	24.9	17	25	**186327**	**QSL-V0-G¼-6**	**10**
	4.6	8	16	28.5	5.6	–	27.9	17	27	**186328**	**QSL-V0-G¼-8**	**10**
	6.2	10	19	32.5	5.6	–	31.4	17	33	**186329**	**QSL-V0-G¼-10**	**10**
	6.2	12	22.2	34.5	5.6	–	34.4	21	53	**186330**	**QSL-V0-G¼-12**	**1**
G⅜	4.6	8	16	30	6.6	–	27.9	19	40	**186331**	**QSL-V0-G⅜-8**	**10**
	6.2	10	19	34	6.6	–	31.4	19	43	**186332**	**QSL-V0-G⅜-10**	**10**
	7.7	12	22.2	36	6.6	–	34.4	21	47	**186333**	**QSL-V0-G⅜-12**	**1**
G½	8.2	10	19	37	7.6	–	31.4	24	69	**186334**	**QSL-V0-G½-10**	**1**
	7.7	12	22.2	39	7.6	–	34.4	24	72	**186335**	**QSL-V0-G½-12**	**1**

* Packaging unit quantity

Push-in L-connector QSL-V0



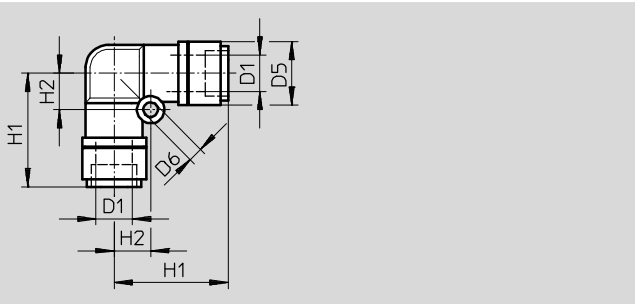

Dimensions and ordering data

Tubing O.D. D1	Nominal size [mm]	D5 ∅	D6 ∅	H1	H2	Weight/piece [g]	Part No.	Type	PU*
4	2.3	12	3.2	22	6.5	6.4	**132893**	**QSL-V0-4**	**10**
6	3.6	14	3.2	25.2	8	8.7	**160540**	**QSL-V0-6**	**10**
8	4.6	16	4.2	27.6	10	13	**160541**	**QSL-V0-8**	**10**
10	6.2	19	4.2	31.4	12	20	**160542**	**QSL-V0-10**	**10**
12	7.7	22.2	4.2	34.4	14	29	**160543**	**QSL-V0-12**	**10**

* Packaging unit quantity

Push-in fittings QS-V0, Quick Star, flame-retardant

Technical data

Push-in T-fitting QST-V0

Male thread with external hex



R thread

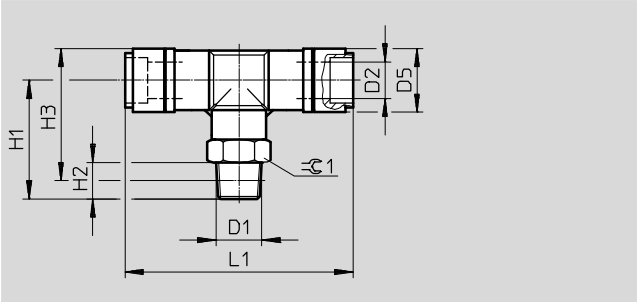



G thread

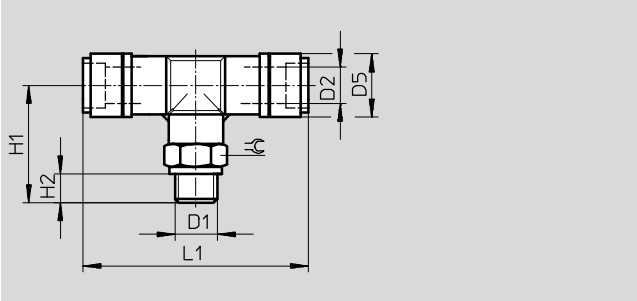

Dimensions and ordering data

Connection D1	Nominal size [mm]	Tubing O.D. D2	D5 ∅	H1	H2	H3	L1	⌀	Weight/ piece [g]	Part No.	Type	PU*
R thread												
R⅛	2.3	4	12	23.2	8	25.2	44	10	15	**132894**	**QST-V0-⅛-4**	**10**
	3.6	6	14	26	8	29	50.5	12	19	**160522**	**QST-V0-⅛-6**	**10**
	4.6	8	16	26.3	8	30.3	55.2	14	24	**160523**	**QST-V0-⅛-8**	**10**
R¼	3.6	6	14	29	11	30	50.5	14	27	**160524**	**QST-V0-¼-6**	**10**
	4.6	8	16	29.3	11	31.3	55.2	14	30	**160525**	**QST-V0-¼-8**	**10**
	6.2	10	19	36	11	39.5	60.8	17	44	**160526**	**QST-V0-¼-10**	**10**
	6.2	12	22.2	38	11	43.1	66.8	21	63	**160527**	**QST-V0-¼-12**	**10**
R⅜	4.6	8	16	31.1	12	32.8	55.2	17	43	**160528**	**QST-V0-⅜-8**	**10**
	6.2	10	19	37	12	40.2	60.8	17	53	**160529**	**QST-V0-⅜-10**	**10**
	7.7	12	22.2	39	12	43.8	66.8	21	63	**160530**	**QST-V0-⅜-12**	**1**
R½	6.2	10	19	40	15	41.3	60.8	21	74	**160531**	**QST-V0-½-10**	**1**
	7.7	12	22.2	42	15	44.9	66.8	21	81	**160532**	**QST-V0-½-12**	**1**
G thread with sealing ring												
G⅛	4.7	6	14	25	5.1	–	50.5	13	19	**186336**	**QST-V0-G⅛-6**	**10**
	5.4	8	16	25.3	5.1	–	55.2	14	23	**186337**	**QST-V0-G⅛-8**	**10**
G¼	5.7	6	14	26.5	5.6	–	50.5	17	29	**186338**	**QST-V0-G¼-6**	**10**
	6	8	16	26.8	5.6	–	55.2	17	32	**186339**	**QST-V0-G¼-8**	**10**
	7.3	10	19	32.5	5.6	–	60.8	17	41	**186340**	**QST-V0-G¼-10**	**10**
	8.8	12	22.2	34.5	5.6	–	66.8	21	64	**186341**	**QST-V0-G¼-12**	**10**
G⅜	7.2	8	16	28.3	6.6	–	55.2	19	45	**186342**	**QST-V0-G⅜-8**	**10**
	8	10	19	34	6.6	–	60.8	19	51	**186343**	**QST-V0-G⅜-10**	**10**
	8.8	12	22.2	36	6.6	–	66.8	21	59	**186344**	**QST-V0-G⅜-12**	**1**
G½	9.6	10	19	37	7.6	–	60.8	24	77	**186345**	**QST-V0-G½-10**	**1**
	9.9	12	22.2	39	7.6	–	66.8	24	84	**186346**	**QST-V0-G½-12**	**1**

* Packaging unit quantity

Push-in fittings QS-V0, Quick Star, flame-retardant

Technical data

Push-in T-connector QST-V0



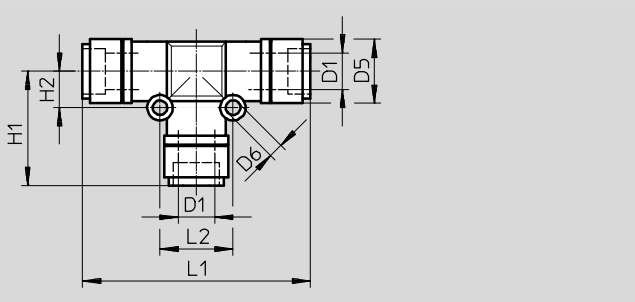

Dimensions and ordering data

Tubing O.D. D1	Nominal size [mm]	D5 ∅	D6 ∅	H1	H2	L1	L2	Weight/ piece [g]	Part No.	Type	PU*
4	2.6	12	3.2	22.3	6.5	44.6	13	9.4	**132896**	**QST-V0-4**	**10**
6	4	14	3.2	25.15	8	50.3	16	14	**160533**	**QST-V0-6**	**10**
8	5	16	3.2	27.4	9	54.8	18	18	**160534**	**QST-V0-8**	**10**
10	6.7	19	4.2	30.4	12	60.8	24	28	**160535**	**QST-V0-10**	**10**
12	8.7	22.2	4.2	33.2	14	66.8	28	41	**160536**	**QST-V0-12**	**1**

* Packaging unit quantity

Release tool QSO
Release aid for QS push-in fittings



Dimensions and ordering data				
Tubing O.D.	Weight/piece [g]	Part No.	Type	PU*
3 ... 10	13	**158419**	**QSO**	**1**

* Packaging unit quantity

Unikeyic Electronics

Global Electronic Components Distributor

Click to view pricing, inventory, delivery, and lifecycle information:

FESTO:

153307 DSBC-80-20-D3-PPSA-N3 NPQP-LQ-R18-Q8-FD-P10 NPQP-Y-R12-Q12-FD VABM-B10-25S-G38-10 NPQP-LQ-R18-Q4-FD-P10 NPQP-T-Q8-E-FD-P10 QSS-8-F QSY-6H-4 153367 QS-1/2-16 QS-1/8-8-I QSF-1/4-8-B QSML-6 VABM-B10-25S-G38-6-P3 153151 HGL-1/8-QS-6 NPQH-T-Q14-E-P10 QSLL-G1/2-12 SASC-P4-A-M8-A SGS-M10X1,25 VBQF-U-G14-E 153031 NPQP-D-Q4-S8-FD-P10 NPQP-L-Q10-E-FD-P10 CRVZS-0.4 NPQP-Y-Q6-E-FD-P10 153269 QS-10H-6 QSF-3/8-8-B