Honeywell

MICRO SWITCH™ Key-Operated Safety Interlock Switch

GK Series

004790

Issue 1

Datasheet



DESCRIPTION

MICRO SWITCH™ GK Series switches are key-operated safety interlock rugged metal switches which monitor the positions of gates, guards, or doors. The key is attached to the moving portion of the gate, guard, or door. When the gate is closed, the key is inserted into the GK switch indicating a safe position (gate closed) and the machine process can start. The positive opening normally closed contacts are held closed when the key is inserted into the GK switch. Opening the gate, removes the key from the switch. This action opens the normally closed contacts of the switch and interrupts the machine's control circuit.

GK Series switches are designed with dual-entry positions for the key. The key can be inserted from the top or side of the switch which allows more flexibility in mounting the switch in the application. There are four different styles of keys and a variety of switch contact arrangements to satisfy the requirements for most applications requiring a safety interlock key switch. GK Series switches are designed with a unique friction feature for key retention. GK Series switches have been evaluated for safety functions up to and including a safety integrity level (SIL) of SIL3 when evaluated to the requirements of IEC 61508-2:2010.

VALUE TO CUSTOMERS

- Unique friction feature design for key retention
- Positive opening of all normally closed contacts when key is removed from the switch
- Electrical connection via threaded conduit and terminal screws or an integral mini style 10-pin connector
- GK Series switch mount to a standard EN50041 30 x 60 mm dimension
- Different styles of stainless steel keys to accommodate hinged or sliding doors, gates, or guards

FEATURES

- Electrostatic epoxy coated die-cast zinc housing with the EN50041 30 x 60 mm mounting
- Four different types of stainless steel keys
- 1NC/1NO, 2NC, 2NC/1NO, 2NC/2NO, 3NC/1NO, 4NC contact options
- Positive opening operation of normally closed contacts to EN/IEC 60947-5-1-3 specification
- Normally open (NO) contacts to indicate key has been removed
- Unique friction feature design for key retention
- Dual entry head design (side or top entry) for key; up to eight different key entry positions
- Optional one or two integral LEDs in cover of switch for monitoring switch signal and/or output status
- Different conduit options for global applications
- Operating temperature range of -25 °C to 85 °C [-13 °F to 185 °F]
- Switch body environmentally sealed to IP67 and NEMA 1, 4, 12, & 13
- CE, CSA, and UL agency certifications
- Designed and agency evaluated for safety functions up to and including a SIL3 level

POTENTIAL APPLICATIONS

- Hinged or sliding gates, guards, or doors for:
  - Machine tool and metalworking equipment
  - Plastic molding equipment
  - Robotic cells
  - Special purpose machinery

DIFFERENTIATION

- Up to four contacts within each switch for control circuit applications (NC contacts) and auxiliary contacts (NO contacts) to indicate the key removal from the switch
- Optional one integral LED to indicate power to the switch or two integral LEDs to indicate power to the switch and output status of the switch
- Designed and evaluated for safety functions up to and including a SIL3 level

PORTFOLIO

Honeywell safety interlocking switches include the metal solenoid GKL/R Series, miniature plastic GKM Series, EN50047 plastic body GKE Series, and plastic body GKN Series. Honeywell also offers non-interlocking safety switches (GSS Series), non-contact safety switches (FF Series) and cable/rope-pull safety switches (1CPS & 2CPS Series).

MICRO SWITCH™ Key-Operated Safety Interlock Switch, GK Series

Table 1. Specifications

Characteristic	Parameter
Description	Dual entry key operated safety interlock switch
Certifications	CSA (C22.2 No.14. File 57323), UL (per UL508, File E37138), CE (per IEC 60947-1, IEC 60947-5-1)
Housing material	Epoxy coated die-cast zinc
Key (actuator) material	Stainless steel
Conduit/electrical connection	0.5-14 NPT, 20 mm, PG 13,5 threaded conduit; 10-pin “mini” style connector
Contact/switch options*	1NC/1NO; 2 NC; 2NC/2NO; 3NC/1NO; 4NC
Contact design	Double break, electrically separated
Contact material	Silver alloy (standard); gold-plated silver alloy (for low energy applications)
Utilization category	AC15, A300/A600**; DC13 Q300
Rated operational voltage (Ue)	240 Vac, 600 Vac, 250 Vdc
Rated operational current (Ie)	3 A, 1.2 A, 0.27 A
Thermal current (Ith)	10 A
Rated insulation voltage (Ui)	300 V, 600 V
Rated impulse withstand voltage (Uimp)	2500 V
Short circuit protective device (SCPD)	Class J fuse (10 A/600 V)
Conditional short-circuit current	1000 A
Pollution degree	3
Environmental sealing	IP67; NEMA 1, 4, 12, & 13
Operating temperature	-25 °C to 85 °C [-13 °F to 185 °F]
Shock	50 G per IEC 60068-2-27
Vibration	10 G per IEC 60068-2-6
MCTF (Mechanical life)	>1,000,000 cycles with single-sided confidence limit of 95 %
MCTF (Electrical life)	>60,000 cycles
SIL Capability	Up to and including SIL3 (HFT1), IEC 61508-2:2010
Proof test interval	1 year
Optional LEDs***	GLC Series with 1 LED pilot light in front cover (supply voltage 12 Vac/dc to 250 Vac/dc) GLD Series with 2 LED pilot lights in front cover (supply voltage 18 Vdc to 30 Vdc)

*All normally closed (NC) contacts are positive opening.

**A600 for 1NC/1NO contacts.

*** When switch includes LED pilot lights, the switch voltage is limited to the rated LED voltage.

Table 2. Electrical Rating

ac				dc				gold-plated contacts
A300/A600**	AC15							
Ue	Ie	VA Rating		Ue	Ie	VA Rating		1 V 10 µA min.
Volts	Amps	Make	Break	Volts	Amps	Make	Break	50 V 100 mA max.
120	6	7200	720	24	2.8	69	69	
240	3	7200	720	125	0.55	69	69	
380	1.9	7200	720	250	0.27	69	69	
480	1.5	7200	720					
500	1.4	7200	720					
600	1.2	7200	720					

MICRO SWITCH™ Key-Operated Safety Interlock Switch, GK Series

Figure 1. Product Nomenclature

GK	B	A	1	L	X
Switch Type	Body/ Indicator	Conduit	Circuitry	Head	Key*
GK Series Dual-Entry Key-Operated Safety Switch	**B** No indicator **C** Single LED indicator **D** Double LED indicator	**A** 1/2 NPT **B** PG 13.5 **C** 20 mm	**1** 1NC/1NO snap action **2** 2NC/2NO snap action **3** 1NC/1NO, BBM slow acting **4** 1NC/1NO, MBB slow acting **6** 2NC slow acting **7** 1NC/1NO, gold snap action **10** 4NC slow acting **12** 2NC/1NO, BBM slow acting **14** 2NC/2NO, BBM slow acting **16** 3NC/1NO, BBM slow acting **30** 4NC, gold slow acting **32** 2NC/1NO, BBM gold, slow acting **34** 2NC/2NO, BBM gold, slow acting **36** 3NC/1NO, BBM gold, slow acting	**L** Opening to front & top **M** Opening to right & top **N** Opening to back & top **P** Opening to left & top	**6** Straight **7** 90 degree **8** Up-down, spring loaded **9** Side-side, spring loaded **X** No key

NOTE: not all combinations of model code are available.
Please contact your Honeywell provider/representative for assistance.

* A key actuator is required for each switch. It can be specified with each switch or ordered separately.

***Keys**

Listing	Key Style
GKZ56	6 - straight
GKZ57	7 - 90°
GKZ58	8 - up/down
GKZ59	9 - side/side

Figure 2. LED Wiring Diagrams

GKC Series

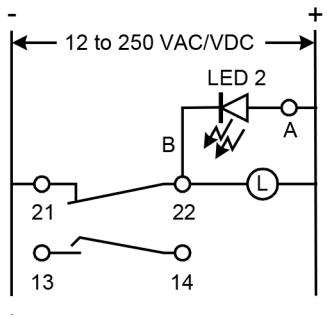

GKC Series

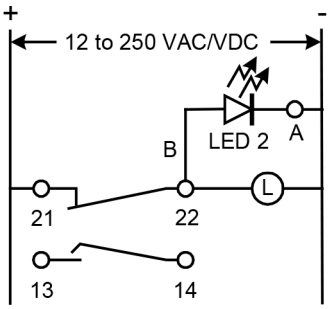

GKD Series

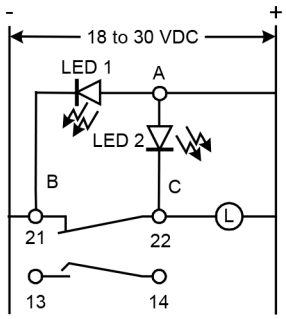

LED 1 = Green (power on)
LED 2 = Yellow (output status)
A = Terminal
B = Red wire
C = Black wire
L = Load

Figure 3. Circuit Diagrams



Contact Code 1
1NC/1NO Snap Action

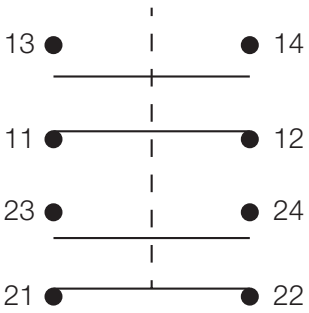

Contact Code 2
2NC/1NO Snap Action

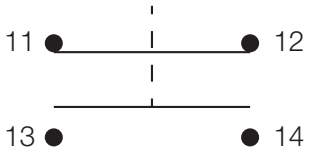

Contact Codes 3 and 4
1NC/1NO Slow Action, BBM or MBB



Contact Code 6
2NC Slow Action

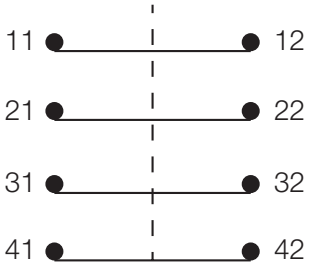

Contact Codes 10 or 30
4NC Slow Action

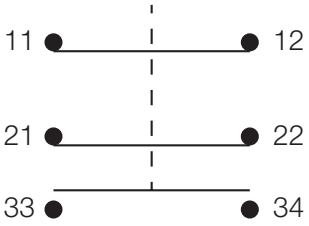

Contact Codes 12 or 32
2NC/1NO Slow Action, BBM

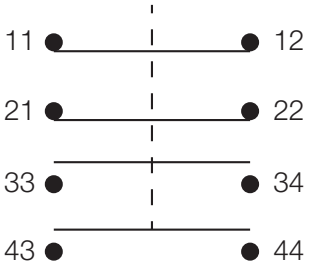

Contact Codes 14 or 34
2NC/2NO Slow Action, BBM

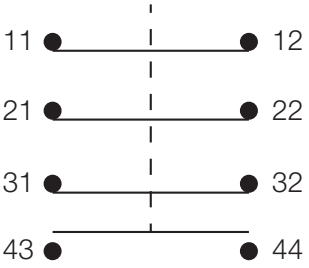

Contact Codes 16 or 36
3NC/1NO Slow Action, BBM

Figure 4. 10-Pin Connector Circuit Diagram, Modification Code -FW

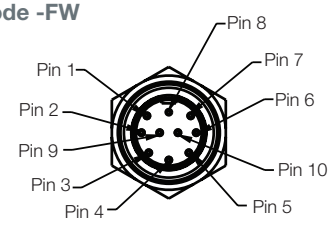

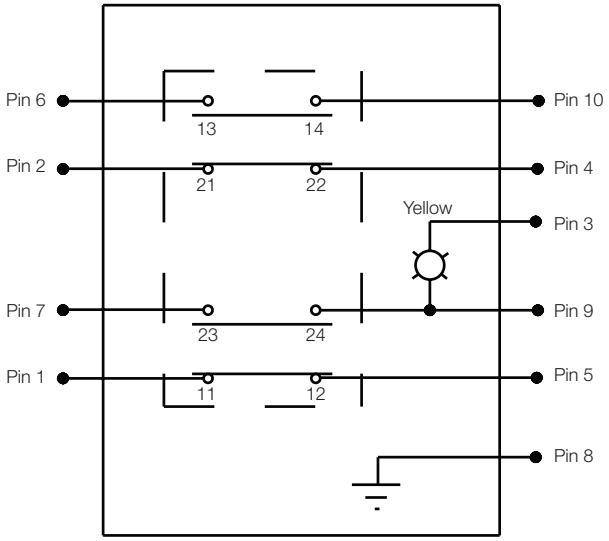

Basic Switch to 10-pin Connector Circuit Diagram
Diagram shown with key inserted

Figure 5. 10-Pin Connector Circuit Diagram, Modification Code -F06

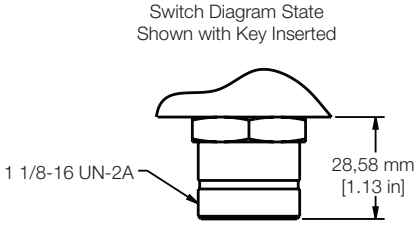

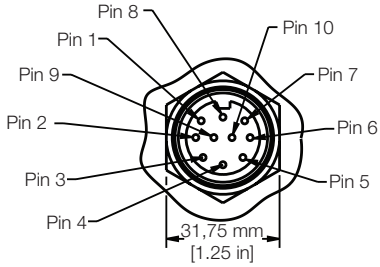

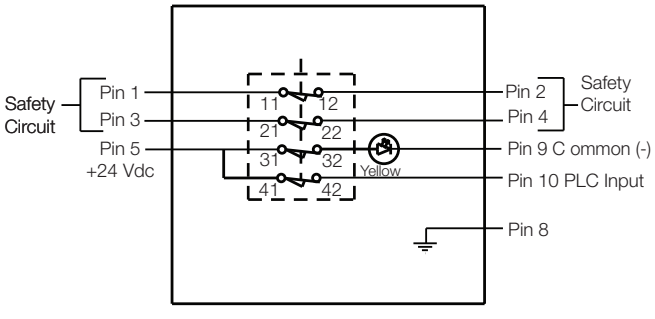

MICRO SWITCH™ Key-Operated Safety Interlock Switch, GK Series

Table 3. GK Safety Switch Order Guide

Catalog Listing	Conduit	Contacts	Contact Material	Head Position (opening for key)	Key Style	with LED Pilot Light/s	Modification
GKBA1LX	0.5-14 NPT	1NC/1NO snap-action	Silver	Front & Top	–	–	–
GKCA1LX	0.5-14 NPT	1NC/1NO snap-action	Silver	Front & Top	–	1 LED (yellow)	–
GKBC1LX	20 mm	1NC/1NO snap-action	Silver	Front & Top	–	–	–
GKCC1LX	20 mm	1NC/1NO snap-action	Silver	Front & Top	–	1 LED (yellow)	–
GKBA1L6	0.5-14 NPT	1NC/1NO snap-action	Silver	Front & Top	Straight key	–	–
GKCA1L6	0.5-14 NPT	1NC/1NO snap-action	Silver	Front & Top	Straight key	1 LED (yellow)	–
GKDA1L6	0.5-14 NPT	1NC/1NO snap-action	Silver	Front & Top	Straight key	2 LEDs (green & yellow)	–
GKBC1L6	20 mm	1NC/1NO snap-action	Silver	Front & Top	Straight key	–	–
GKCC1L6	20 mm	1NC/1NO snap-action	Silver	Front & Top	Straight key	1 LED (yellow)	–
GKDC1L6	20 mm	1NC/1NO snap-action	Silver	Front & Top	Straight key	2 LEDs (green & yellow)	–
GKBA1L7	0.5-14 NPT	1NC/1NO snap-action	Silver	Front & Top	90° key	–	–
GKCA1L7	0.5-14 NPT	1NC/1NO snap-action	Silver	Front & Top	90° key	1 LED (yellow)	–
GKBC1L7	20 mm	1NC/1NO snap-action	Silver	Front & Top	90° key	–	–
GKCC1L7	20 mm	1NC/1NO snap-action	Silver	Front & Top	90° key	1 LED (yellow)	–
GKDC1L7	20 mm	1NC/1NO snap-action	Silver	Front & Top	90° key	2 LEDs (green & yellow)	–
GKBA1L8	0.5-14 NPT	1NC/1NO snap-action	Silver	Front & Top	Spring-loaded up/down	–	–
GKDA1L8	0.5-14 NPT	1NC/1NO snap-action	Silver	Front & Top	Spring-loaded up/down	2 LEDs (green & yellow)	–
GKBA1L8-F11	0.5-14 NPT	1NC/1NO snap-action	Silver	Front & Top	Spring-loaded up/down	–	Fluorocarbon seals
GKBA1L9	0.5-14 NPT	1NC/1NO snap-action	Silver	Front & Top	Spring-loaded side-to-side	–	–
GKCA1L9	0.5-14 NPT	1NC/1NO snap-action	Silver	Front & Top	Spring-loaded side-to-side	1 LED (yellow)	–
GKBA1M7	0.5-14 NPT	1NC/1NO snap-action	Silver	Right & Top	90° key	–	–
GKBA1M8	0.5-14 NPT	1NC/1NO snap-action	Silver	Right & Top	Spring-loaded up/down	–	–
GKCA1M8	0.5-14 NPT	1NC/1NO snap-action	Silver	Right & Top	Spring-loaded up/down	1 LED (yellow)	–
GKBA1N6	0.5-14 NPT	1NC/1NO snap-action	Silver	Back & Top	Straight key	–	–
GKBA1N7	0.5-14 NPT	1NC/1NO snap-action	Silver	Back & Top	90° key	–	–
GKBC1N7	20 mm	1NC/1NO snap-action	Silver	Back & Top	90° key	–	–
GKBA1P8	0.5-14 NPT	1NC/1NO snap-action	Silver	Left & Top	Spring-loaded up/down	–	–
GKCA1P6	0.5-14 NPT	1NC/1NO snap-action	Silver	Left & Top	Straight key	1 LED (yellow)	–
GKCA1P7	0.5-14 NPT	1NC/1NO snap-action	Silver	Left & Top	90° key	1 LED (yellow)	–
GKDA1P7	0.5-14 NPT	1NC/1NO snap-action	Silver	Left & Top	90° key	2 LEDs (green & yellow)	–
GKBA3LX	0.5-14 NPT	1NC/1NO slow action, BBM	Silver	Front & Top	–	–	–
GKCA3LX	0.5-14 NPT	1NC/1NO slow action, BBM	Silver	Front & Top	–	1 LED (yellow)	–
GKBA3L6	0.5-14 NPT	1NC/1NO slow action, BBM	Silver	Front & Top	Straight key	–	–
GKCA3L6	0.5-14 NPT	1NC/1NO slow action, BBM	Silver	Front & Top	Straight key	1 LED (yellow)	–
GKDA3L6	0.5-14 NPT	1NC/1NO slow action, BBM	Silver	Front & Top	Straight key	2 LEDs (green & yellow)	–
GKBA3L7	0.5-14 NPT	1NC/1NO slow action, BBM	Silver	Front & Top	90° key	–	–

Table 3. GK Safety Switch Order Guide, continued

Catalog Listing	Conduit	Contacts	Contact Material	Head Position (opening for key)	Key Style	with LED Pilot Light/s	Modification
GKBB3L7	PG 13,5	1NC/1NO slow action, BBM	Silver	Front & Top	90° key	–	–
GKBA3L8	0.5-14 NPT	1NC/1NO slow action, BBM	Silver	Front & Top	Spring-loaded up/down	–	–
GKBA3L9	0.5-14 NPT	1NC/1NO slow action, BBM	Silver	Front & Top	Spring-loaded side-to-side	–	–
GKDA3L9	0.5-14 NPT	1NC/1NO slow action, BBM	Silver	Front & Top	Spring-loaded side-to-side	2 LEDs (green & yellow)	–
GKBA4LX	0.5-14 NPT	1NC/1NO slow action, MBB	Silver	Front & Top	–	–	–
GKBA6LX	0.5-14 NPT	2NC slow action	Silver	Front & Top	–	–	–
GKCA6LX	0.5-14 NPT	2NC slow action	Silver	Front & Top	–	1 LED (yellow)	–
GKCC6LX	20 mm	2NC slow action	Silver	Front & Top	–	1 LED (yellow)	–
GKBC6LX	20 mm	2NC slow action	Silver	Front & Top	–	–	–
GKCA6L6	0.5-14 NPT	2NC slow action	Silver	Front & Top	Straight key	1 LED (yellow)	–
GKBC6L6	20 mm	2NC slow action	Silver	Front & Top	Straight key	–	–
GKBA6L7	0.5-14 NPT	2NC slow action	Silver	Front & Top	90° key	–	–
GKBB6L7	PG 13,5	2NC slow action	Silver	Front & Top	90° key	–	–
GKBB6L9	PG 13,5	2NC slow action	Silver	Front & Top	Spring-loaded side-to-side	–	–
GKDB6L9	PG 13,5	2NC slow action	Silver	Front & Top	Spring-loaded side-to-side	2 LEDs (green & yellow)	–
GKCA6M8	0.5-14 NPT	2NC slow action	Silver	Right & Top	Spring-loaded up/down	1 LED (yellow)	–
GKCA6N7	0.5-14 NPT	2NC slow action	Silver	Back & Top	90° key	1 LED (yellow)	–
GKBA6N8	0.5-14 NPT	2NC slow action	Silver	Back & Top	Spring-loaded up/down	–	–
GKBA32L7	0.5-14 NPT	2NC/1NO slow action, BBM	Gold-plated	Front & Top	90° key	–	–
GKBA2LX	0.5-14 NPT	2NC/2NO snap-action	Silver	Front & Top	–	–	–
GKDA2LX	0.5-14 NPT	2NC/2NO snap-action	Silver	Front & Top	–	2 LEDs (green & yellow)	–
GKBC2LX	20 mm	2NC/2NO snap-action	Silver	Front & Top	–	–	–
GKDA2L7	0.5-14 NPT	2NC/2NO snap-action	Silver	Front & Top	90° key	2 LEDs (green & yellow)	–
GKBA14LX	0.5-14 NPT	2NC/2NO slow action, BBM	Silver	Front & Top	–	–	–
GKBA34LX	0.5-14 NPT	2NC/2NO slow action, BBM	Gold-plated	Front & Top	–	–	–
GKBB14LX	PG 13,5	2NC/2NO slow action, BBM	Silver	Front & Top	–	–	–
GKBC14LX	20 mm	2NC/2NO slow action, BBM	Silver	Front & Top	–	–	–
GKBA14L6	0.5-14 NPT	2NC/2NO slow action, BBM	Silver	Front & Top	Straight key	–	–
GKCA14L6	0.5-14 NPT	2NC/2NO slow action, BBM	Silver	Front & Top	Straight key	1 LED (yellow)	–
GKDA14L6	0.5-14 NPT	2NC/2NO slow action, BBM	Silver	Front & Top	Straight key	2 LEDs (green & yellow)	–
GKCA14L6-FW	–	2NC/2NO slow action, BBM	Silver	Front & Top	Straight key	1 LED (yellow)	Pre-wired 10-pin mini-style connector
GKCA34L6-FW	–	2NC/2NO slow action, BBM	Gold-plated	Front & Top	Straight key	1 LED (yellow)	Pre-wired 10-pin mini-style connector

Table 3. GK Safety Switch Order Guide, continued

Catalog Listing	Conduit	Contacts	Contact Material	Head Position (opening for key)	Key Style	with LED Pilot Light/s	Modification
GKBB14L6	PG 13,5	2NC/2NO slow action, BBM	Silver	Front & Top	Straight key	–	–
GKBC14L6	20 mm	2NC/2NO slow action, BBM	Silver	Front & Top	Straight key	–	–
GKBA14L7	0.5-14 NPT	2NC/2NO slow action, BBM	Silver	Front & Top	90° key	–	–
GKCA14L7	0.5-14 NPT	2NC/2NO slow action, BBM	Silver	Front & Top	90° key	1 LED (yellow)	–
GKDA14L7	0.5-14 NPT	2NC/2NO slow action, BBM	Silver	Front & Top	90° key	2 LEDs (green & yellow)	–
GKCA14L7-FW	–	2NC/2NO slow action, BBM	Silver	Front & Top	90° key	1 LED (yellow)	Pre-wired 10-pin mini-style connector
GKCA34L7-FW	–	2NC/2NO slow action, BBM	Gold-plated	Front & Top	90° key	1 LED (yellow)	Pre-wired 10-pin mini-style connector
GKBB14L7	PG 13,5	2NC/2NO slow action, BBM	Silver	Front & Top	90° key	–	–
GKBC14L7	20 mm	2NC/2NO slow action, BBM	Silver	Front & Top	90° key	–	–
GKBA14L8	0.5-14 NPT	2NC/2NO slow action, BBM	Silver	Front & Top	Spring-loaded up/down	–	–
GKCA14L8	0.5-14 NPT	2NC/2NO slow action, BBM	Silver	Front & Top	Spring-loaded up/down	1 LED (yellow)	–
GKBB14L8	PG 13,5	2NC/2NO slow action, BBM	Silver	Front & Top	Spring-loaded up/down	–	–
GKBA14L9	0.5-14 NPT	2NC/2NO slow action, BBM	Silver	Front & Top	Spring-loaded side-to-side	–	–
GKCA14L9	0.5-14 NPT	2NC/2NO slow action, BBM	Silver	Front & Top	Spring-loaded side-to-side	1 LED (yellow)	–
GKCA14L9-FW	–	2NC/2NO slow action, BBM	Silver	Front & Top	Spring-loaded side-to-side	1 LED (yellow)	Pre-wired 10-pin mini-style connector
GKBB14L9	PG 13,5	2NC/2NO slow action, BBM	Silver	Front & Top	Spring-loaded side-to-side	–	–
GKBC14L9	20 mm	2NC/2NO slow action, BBM	Silver	Front & Top	Spring-loaded side-to-side	–	–
GKCA14MX	0.5-14 NPT	2NC/2NO slow action, BBM	Silver	Right & Top	–	1 LED (yellow)	–
GKBA14M6	0.5-14 NPT	2NC/2NO slow action, BBM	Silver	Right & Top	Straight key	–	–
GKCA14M6	0.5-14 NPT	2NC/2NO slow action, BBM	Silver	Right & Top	Straight key	1 LED (yellow)	–
GKCA14M6-FW	–	2NC/2NO slow action, BBM	Silver	Right & Top	Straight key	1 LED (yellow)	Pre-wired 10-pin mini-style connector
GKCA34M6-FW	–	2NC/2NO slow action, BBM	Gold-plated	Right & Top	Straight key	1 LED (yellow)	Pre-wired 10-pin mini-style connector
GKBB14M6	PG 13,5	2NC/2NO slow action, BBM	Silver	Right & Top	Straight key	–	–
GKBB14M9	PG 13,5	2NC/2NO slow action, BBM	Silver	Right & Top	Spring-loaded side-to-side	–	–
GKBA14N6	0.5-14 NPT	2NC/2NO slow action, BBM	Silver	Back & Top	Straight key	–	–
GKCA14N6	0.5-14 NPT	2NC/2NO slow action, BBM	Silver	Back & Top	Straight key	1 LED (yellow)	
GKBB14P6	PG 13,5	2NC/2NO slow action, BBM	Silver	Left & Top	Straight key	–	–
GKDA14P7	0.5-14 NPT	2NC/2NO slow action, BBM	Silver	Left & Top	90° key	2 LEDs (green & yellow)	–
GKCA14P6-FW	–	2NC/2NO slow action, BBM	Silver	Left & Top	Straight key	1 LED (yellow)	Pre-wired 10-pin mini-style connector

Table 3. GK Safety Switch Order Guide, continued

Catalog Listing	Conduit	Contacts	Contact Material	Head Position (opening for key)	Key Style	with LED Pilot Light/s	Modification
GKCA34P6-FW	–	2NC/2NO slow action, BBM	Gold-plated	Left & Top	Straight key	1 LED (yellow)	Pre-wired 10-pin mini-style connector
GKBA36LX	0.5-14 NPT	3NC/1NO slow action, BBM	Gold-plated	Front & Top	–	–	–
GKCA36LX	0.5-14 NPT	3NC/1NO slow action, BBM	Gold-plated	Front & Top	–	1 LED (yellow)	–
GKBC36LX	20 mm	3NC/1NO slow action, BBM	Gold-plated	Front & Top	–	–	–
GKCC36LX	20 mm	3NC/1NO slow action, BBM	Gold-plated	Front & Top	–	1 LED (yellow)	–
GKBB16LX	PG 13,5	3NC/1NO slow action, BBM	Silver	Front & Top	–	–	–
GKBC16LX	20 mm	3NC/1NO slow action, BBM	Silver	Front & Top	–	–	–
GKBA16L6	0.5-14 NPT	3NC/1NO slow action, BBM	Silver	Front & Top	Straight key	–	–
GKBA16L7	0.5-14 NPT	3NC/1NO slow action, BBM	Silver	Front & Top	90° key	–	–
GKBC16L7	20 mm	3NC/1NO slow action, BBM	Silver	Front & Top	90° key	–	–
GKBA36L8	0.5-14 NPT	3NC/1NO slow action, BBM	Gold-plated	Front & Top	Spring-loaded up/down	–	–
GKBC16L8	20 mm	3NC/1NO slow action, BBM	Silver	Front & Top	Spring-loaded up/down	–	–
GKBA16L8	0.5-14 NPT	3NC/1NO slow action, BBM	Silver	Front & Top	Spring-loaded up/down	–	–
GKBA16L9	0.5-14 NPT	3NC/1NO slow action, BBM	Silver	Front & Top	Spring-loaded side-to-side	–	–
GKBC16M6	20 mm	3NC/1NO slow action, BBM	Silver	Right & Top	Straight key	–	–
GKBA10LX	0.5-14 NPT	4NC slow action	Silver	Front & Top	–	–	–
GKBC10LX	20 mm	4NC slow action	Silver	Front & Top	–	–	–
GKBA30LX	0.5-14 NPT	4NC slow action	Gold-plated	Front & Top	–	–	–
GKCA30LX	0.5-14 NPT	4NC slow action	Gold-plated	Front & Top	–	1 LED (yellow)	–
GKBC30LX	20 mm	4NC slow action	Gold-plated	Front & Top	–	–	–
GKCC30LX	20 mm	4NC slow action	Gold-plated	Front & Top	–	1 LED (yellow)	–
GKBA10L6	0.5-14 NPT	4NC slow action	Silver	Front & Top	Straight key	–	–
GK-CA10L6-F06-C	–	4NC slow action	Silver	Front & Top	Straight key	1 LED (yellow)	Pre-wired 10-pin mini-style connector
GKBA10L7	0.5-14 NPT	4NC slow action	Silver	Front & Top	90° key	–	–
GKBA10L9	0.5-14 NPT	4NC slow action	Silver	Front & Top	Spring-loaded side-to-side	–	–
GKBA10N6	0.5-14 NPT	4NC slow action	Silver	Back & Top	Straight key	–	–
GKBA10N8	0.5-14 NPT	4NC slow action	Silver	Back & Top	Spring-loaded up/down	–	–

Figure 6. GK Series Overall Dimensions mm [in]

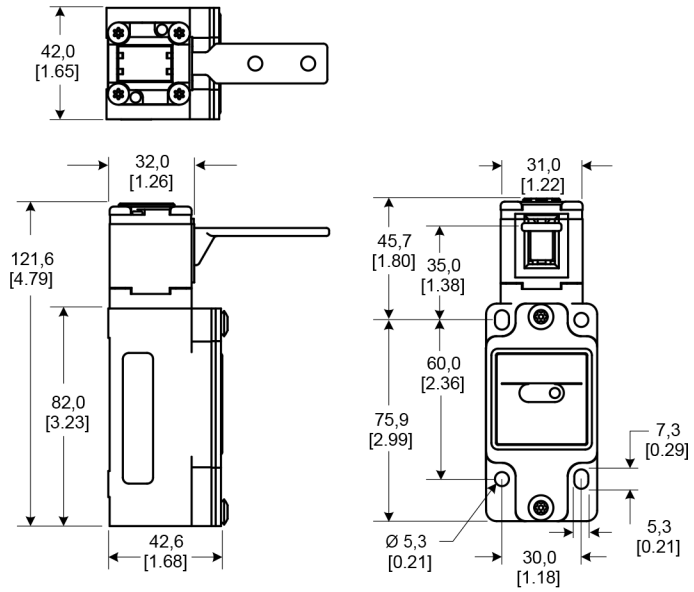

Figure 7. GK Series LEDs

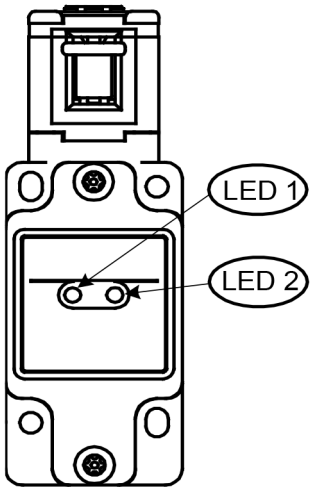

Figure 8. GK Series Head Code L

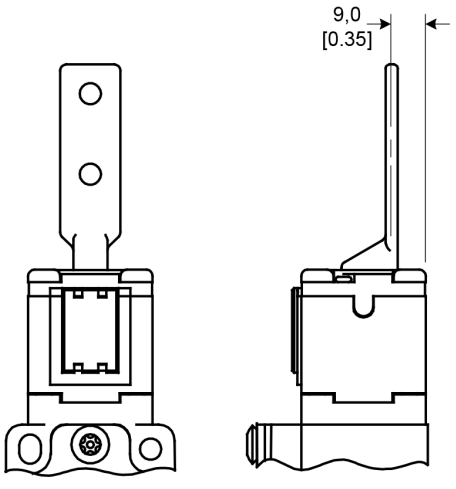

Figure 9. GK Series Head Code M

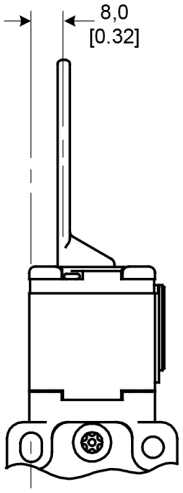

Figure 10. GK Series Head Code N

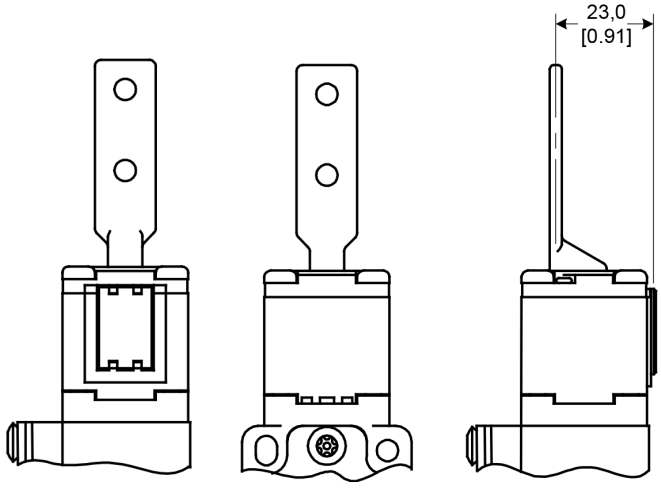

Figure 11. GK Series Head Code P

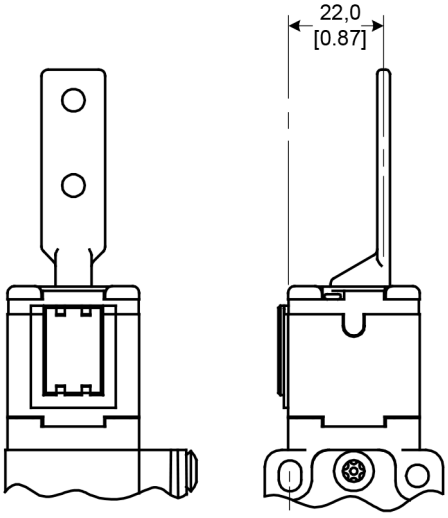

Figure 12. GK Series GKZ56 Key mm [in]

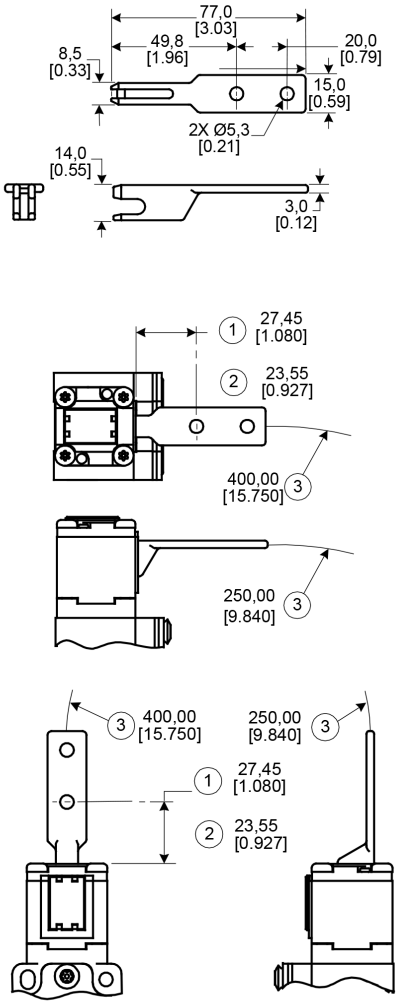

1. Minimum insertion distance
2. Maximum insertion distance
3. Minimum swing radius
4. Swing adjustment screw

Figure 13. GK Series GKZ57 Key mm [in]

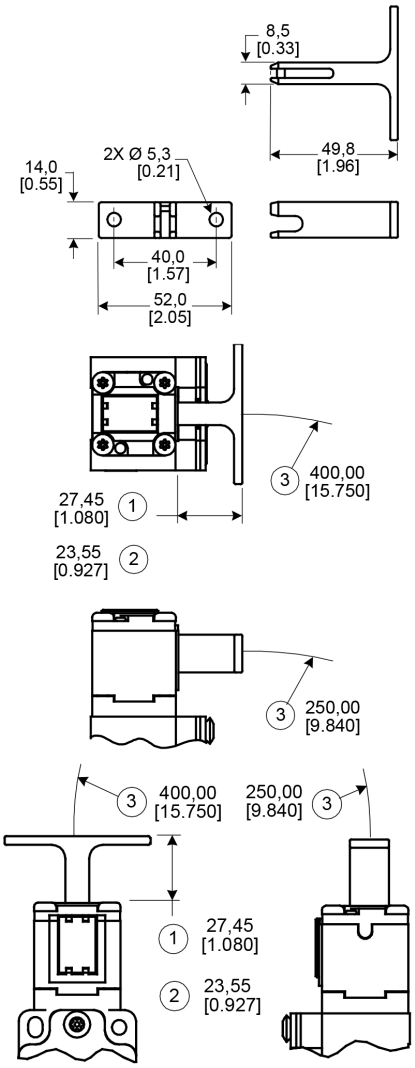

1. Minimum insertion distance
2. Maximum insertion distance
3. Minimum swing radius
4. Swing adjustment screw

Figure 14. GK Series GKZ58 Key mm [in]

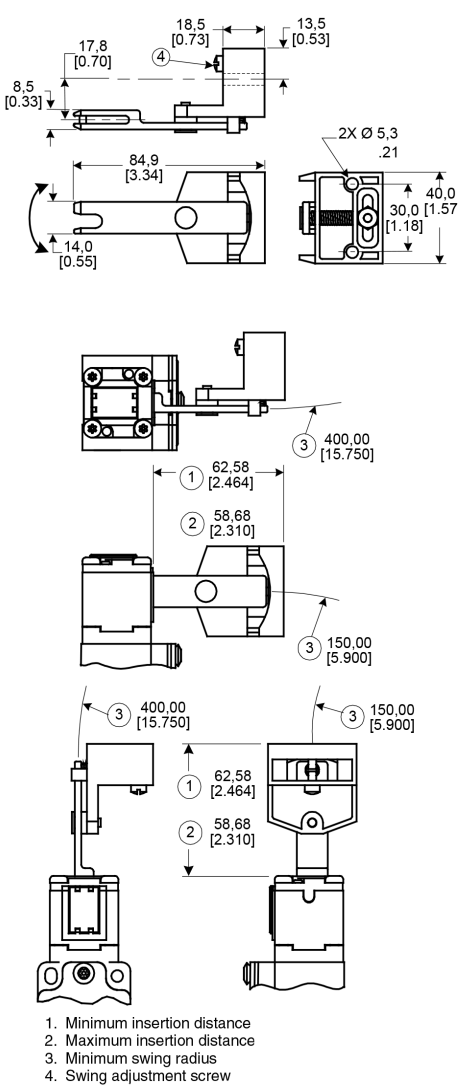

1. Minimum insertion distance
2. Maximum insertion distance
3. Minimum swing radius
4. Swing adjustment screw

Figure 15. GK Series GKZ59 Key mm [in]

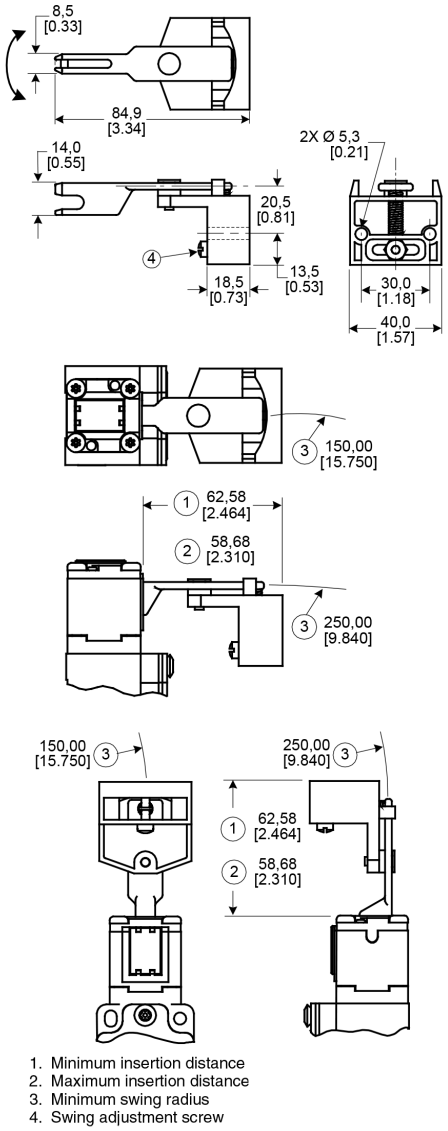

1. Minimum insertion distance
2. Maximum insertion distance
3. Minimum swing radius
4. Swing adjustment screw

Figure 16. GK Series GKZL2 Lock-out Device mm [in]

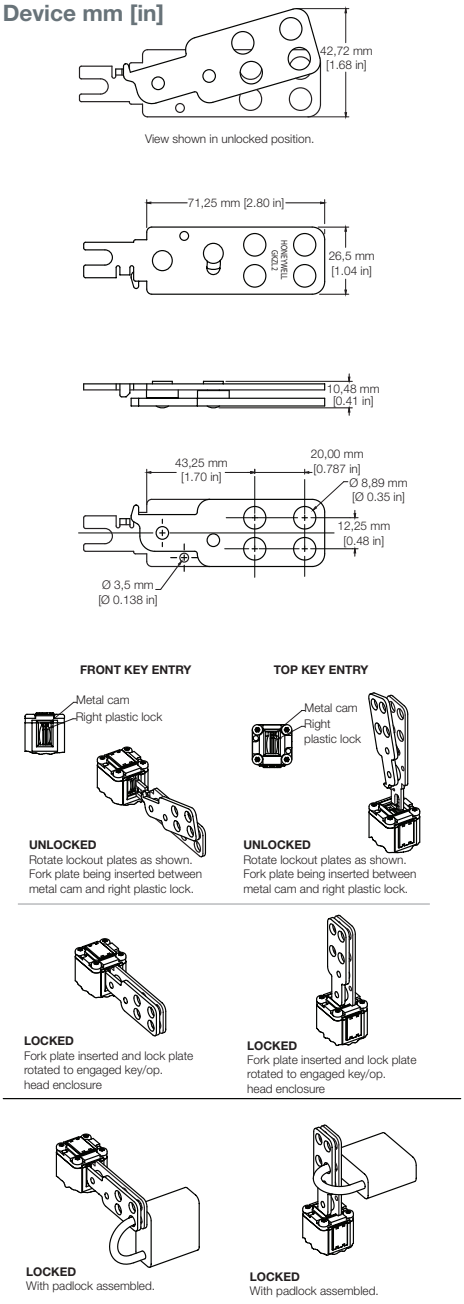

Figure 17. GK Series GKZ7 Safety Deadbolt Actuator mm [in]

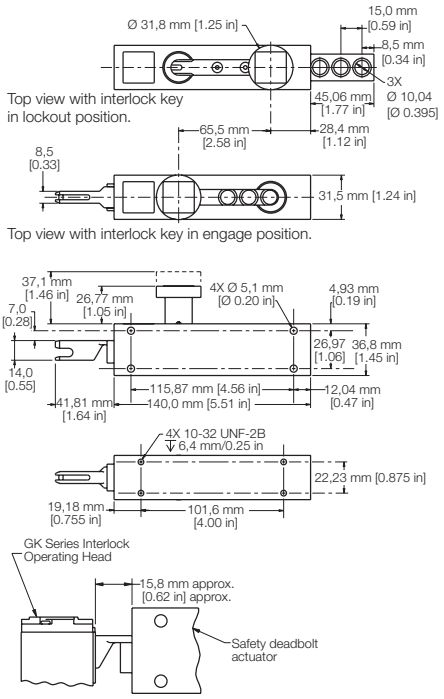

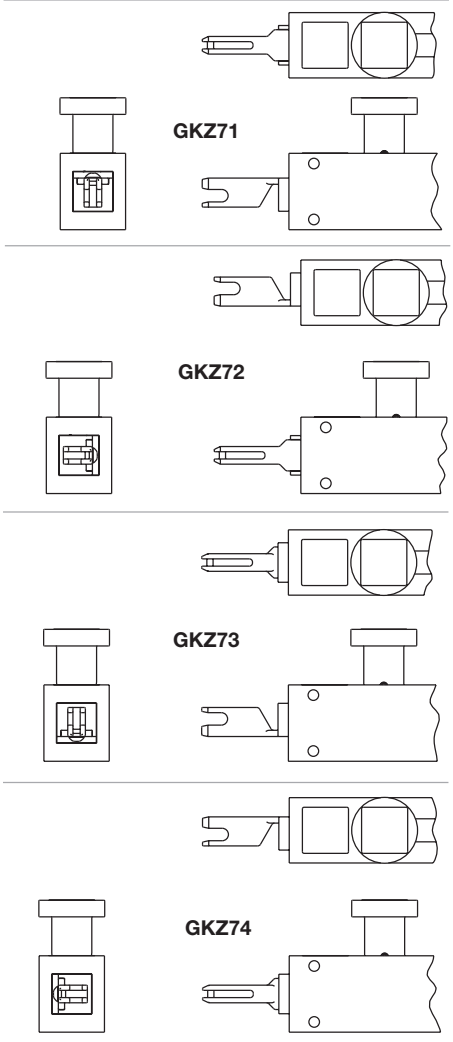

Table 4. Keys and Accessories

	Catalog Listing	Description
	**GKZ56**	Straight key
	**GKZ57**	90° key
	**GKZ58**	Spring loaded up/down
	**GKZ59**	Spring loaded side-to-side
	**GKZL2**	Lockout device
	**GKZ71**	Safety deadbolt actuator with key [0° ref.]
	GKZ72	Safety deadbolt actuator with key [90° ref.]
	GKZ73	Safety deadbolt actuator with key [180 ° ref.]
	GKZ74	Safety deadbolt actuator with key [270° ref.]
	**GKZT15BIT**	Torx T-15 security bit for cover screws

ADDITIONAL MATERIALS

The following associated literature is available on the Honeywell web site at sensing.honeywell.com:

- Product installation instructions
- Product range guide
- Product line guide

Find out more

Honeywell serves its customers through a worldwide network of sales offices, representatives and distributors. For application assistance, current specifications, pricing or name of the nearest Authorized Distributor, contact your local sales office. To learn more about Honeywell's sensing and switching products, call **+1-815-235-6847 or 1-800-537-6945,** visit **sensing.honeywell.com,** or e-mail inquiries to **info.sc@honeywell.com**

⚠ WARNING
RISK TO LIFE OR PROPERTY

Never use this product for an application involving serious risk to life or property without ensuring that the system as a whole has been designed to address the risks, and that this product is properly rated and installed for the intended use within the overall system.

Failure to comply with these instructions could result in death or serious injury.

⚠ WARNING
MISUSE OF DOCUMENTATION

- The information presented in this product sheet is for reference only. Do not use this document as a product installation guide.
- Complete installation, operation, and maintenance information is provided in the instructions supplied with each product.

Failure to comply with these instructions could result in death or serious injury.

Warranty/Remedy

Honeywell warrants goods of its manufacture as being free of defective materials and faulty workmanship. Honeywell's standard product warranty applies unless agreed to otherwise by Honeywell in writing; please refer to your order acknowledgement or consult your local sales office for specific warranty details. If warranted goods are returned to Honeywell during the period of coverage, Honeywell will repair or replace, at its option, without charge those items it finds defective. **The foregoing is buyer's sole remedy and is in lieu of all other warranties, expressed or implied, including those of merchantability and fitness for a particular purpose. In no event shall Honeywell be liable for consequential, special, or indirect damages.**

While we provide application assistance personally, through our literature and the Honeywell web site, it is up to the customer to determine the suitability of the product in the application.

Specifications may change without notice. The information we supply is believed to be accurate and reliable as of this printing. However, we assume no responsibility for its use.

Honeywell Sensing and Productivity Solutions
9680 Old Bailes Road
Fort Mill, SC 29707
honeywell.com

004790-1-EN IL50 GLO
March 2016
© 2016 Honeywell International Inc. All rights reserved.

Mouser Electronics

Authorized Distributor

Click to View Pricing, Inventory, Delivery & Lifecycle Information:

Honeywell:

GKCA14L8 GKCA14MX GKCA3LX GKCA1L7 GKCA6L6 GKCC1L7 GKCA1L9