ABS-210-135-RC SPEAKER with 135mm leads and Molex connector

Specifications	ABS-210-135-RC
Rated impedance / 2KHz/1V	8±15%Ω
Nominal input power	1.0W
Maximum input power	1.5W
Resonant frequency	350±20%Hz/1V
Frequency range	F0-20,000Hz
Sound pressure level at 0.1W/0.1m	92±3dB
Total harmonic distortion / 1KHz/0.1W	5%max
Fluz density	0.6T
Magnet NdFeB	ø12.5x1.5tmm
Voice coil diameter	ø13.28mm
Operating temperature	-10~+40°C
Storage temperature	-20~+60°C
Weight	13.2g±5%

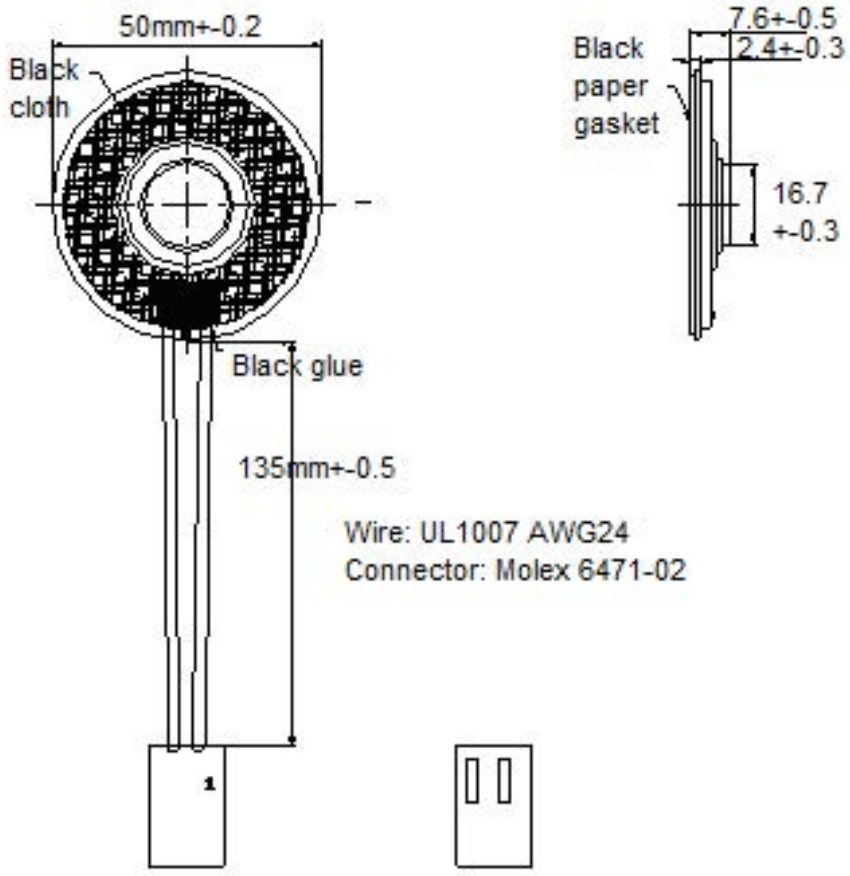

Dimensions Unit: mm

Features

- ROHS compliant
- Paper cone speaker
- Low profile

Material

Frame - SPCC
Diaphragm - PET
Plate SPCC
Magnet - NdFeB
PCB - FR4
Front gasket - Paper

ALAN BUTCHER COMPONENTS LTD

Alan Butcher Components Ltd
Unit 1 Beechwood Clump Farm Industrial Estate Tin Pot Lane Blandford Dorset DT11 7TD
Telephone 01258 456360 **Facsimile** 01258 459194 **Email** sales@abcomponents.co.uk
www.abcomponents.co.uk

nqa. ISO 9001 Registered UKAS QUALITY MANAGEMENT 015
BS EN ISO 9001 Certification No 5239

ABS-210-135-RC SPEAKER - Frequency Curve

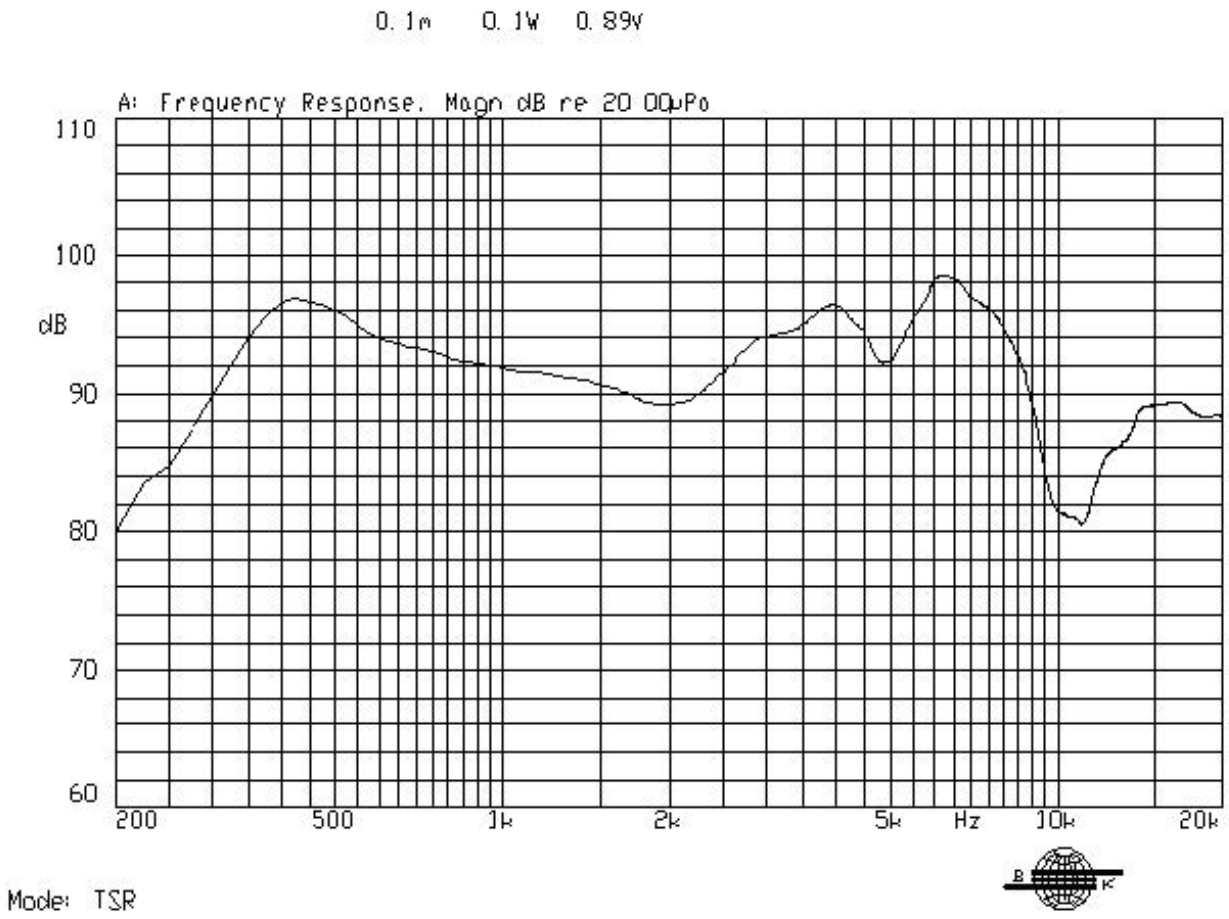

ALAN BUTCHER COMPONENTS LTD

Alan Butcher Components Ltd
Unit 1 Beechwood Clump Farm Industrial Estate Tin Pot Lane Blandford Dorset DT11 7TD
Telephone 01258 456360 **Facsimile** 01258 459194 **Email** sales@abcomponents.co.uk
www.abcomponents.co.uk

nqa. ISO 9001 Registered UKAS QUALITY MANAGEMENT 015
BS EN ISO 9001 Certification No 5239

Unikeyic Electronics

Global Electronic Components Distributor

Click to view pricing, inventory, delivery, and lifecycle information:

multicomp:

CFS-TF-1818 MCWR08X39R0FTL MCSDRH73B-681MHF MP006964 SPC19989 MC0603B393K500CT MC34747 MCMR50V335M4X7 MP005415 SMAJ160A-13-F MC0603N100J201CT MCMET 800MA 250V MCMR06X1004FTL 2213R-24G CMS-DF-1825 MC36427 MCSDC0603-560KU MP006937 CF06332T/4/10 MCLPR50V478M30X25 MCSR08X3300FTL MC-SVT1-S06-G MCWF12R7150BTL MCMR08X2000FTL MUR1540 MC0402WGF499JTCE MC0603N100F500CT MC34589 MCAL0410A1-471KU MCMF0W4FF8202A50