Piezo Buzzer

pro-SIGNAL

RoHS Compliant



Features:

- Colour: Black
- Housing Material: ABS
- Panel Mounted

Specifications:

Transducer Function	: Buzzer
Operating Voltage	: 60 ~ 250V DC/AC
Rated Current at rated voltage	: 16mA at 220V DC/AC
Sound Output at 30cm, at rated voltage	: ≥ 91dB at 220V DC/AC
Resonant Frequency	: 2,800 ±500Hz
Tone	: Fast Pulse (3,000Hz ± 20%)
Operating Temperature	: -20 ~ +60ºC
Storage Temperature	: -30 ~ +70ºC
Weight	: 43g
Tones	: Fast Pulse
External Diameter	: 43mm
External Depth	: 29.5mm

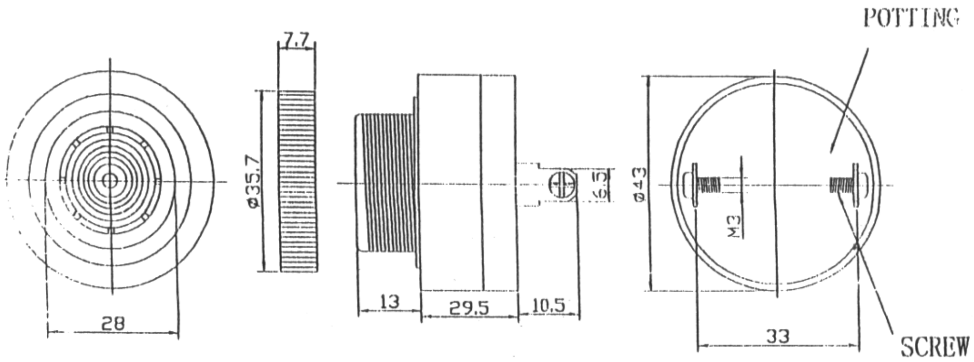

Dimensions : Millimetres
Tolerance: ±0.5m

Part Number Table

Description	Part Number
Piezo Buzzer, Mains Voltage	ABI-027-RC

Important Notice : This data sheet and its contents (the "Information") belong to the members of the Premier Farnell group of companies (the "Group") or are licensed to it. No licence is granted for the use of it other than for information purposes in connection with the products to which it relates. No licence of any intellectual property rights is granted. The Information is subject to change without notice and replaces all data sheets previously supplied. The Information supplied is believed to be accurate but the Group assumes no responsibility for its accuracy or completeness, any error in or omission from it or for any use made of it. Users of this data sheet should check for themselves the Information and the suitability of the products for their purpose and not make any assumptions based on information included or omitted. Liability for loss or damage resulting from any reliance on the Information or use of it (including liability resulting from negligence or where the Group was aware of the possibility of such loss or damage arising) is excluded. This will not operate to limit or restrict the Group's liability for death or personal injury resulting from its negligence. pro-SIGNAL is the registered trademark of the Group. © Premier Farnell plc 2012.

Unikeyic Electronics

Global Electronic Components Distributor

Click to view pricing, inventory, delivery, and lifecycle information:

multicomp:

MCMR08X2000FTL MCAL0410A1-471KU MUR1540 MC0402WGF499JTCE MC0603N100F500CT
MC34747 MCMR50V335M4X7 MCSDRH73B-681MHF MP006964 SPC19989 MC34589
MCMET 800MA 250V MCMF0W4FF8202A50 MP006937 SMAJ160A-13-F 2213R-24G CMS-DF-1825
MCSR08X3300FTL MCWF12R7150BTL MCWR08X39R0FTL MP005415 CF06332T/4/10 CFS-TF-1818
MC0603N100J201CT MCLPR50V478M30X25 MCSDC0603-560KU MC-SVT1-S06-G MC0603B393K500CT
MC36427 MCMR06X1004FTL