VESD08C1-HD1-G3-08
ESD PROTECTION DIODE

Discription

The VESD08C1-HD1-G3-08 protects sensitive semiconductor components from damage or upset due to electrostatic discharge (ESD) and other voltage induced transient events. Excellent clamping capability, low leakage, low capacitance, and fast response time provide best in class protection on designs that are exposed to ESD.
It gives designer the flexibility to protect one unidirectional line in applications where arrays are not practical.



DFN1006-2L
(DFN1006-2A)



Circuit Diagram

Features

- ★ Transient protection for high-speed data lines
  IEC 61000-4-2(ESD) ±8kV (Contact)
  ±15kV (Air)
  IEC 61000-4-4(EFT) 40A (5/50 ns)
- ★ Peak power dissipation: 150W (8/20us)
- ★ Working voltages : 8V
- ★ Ultra-small package (1.0mmx0.6mmx0.5mm)
- ★ Protects one data, control line
- ★ Low capacitance: 65pF (Typical)
- ★ Low clamping voltage
- ★ Low leakage current

Ordering Information

Product ID	Pack	Qty(PCS)
VESD08C1-HD1-G3-08	DFN1006-2L(DFN1006-2A)	10000

Absolute Ratings(Tamb = 25°C)

Symbol	Parameter	Value	Units
P_{PP}	Peak Pulse Power (t_p = 8/20 μ s)	150	W
T_L	Maximum lead temperature for soldering during 10s	260	°C
T_{stg}	Storage Temperature Range	-55 to +150	°C
T_{op}	Operating Temperature Range	-55 to +150	°C
T_j	Maximum junction temperature	150	°C
	IEC61000-4-2 (ESD) air discharge contact discharge	±15 ±8	KV
	IEC61000-4-4 (EFT)	40	A

Electrical Characteristics Ratings at 25°C

Symbol	Parameter	Test Condition	Min	Typ	Max	Units
V_{RWM}	Reverse Working Voltage				8.0	V
V_{BR}	Reverse Breakdown Voltage	I_T = 1mA	8.5			V
I_R	Reverse Leakage Current	V_{RWM} = 8V			1.0	ì A
V_C	Clamping Voltage	I_{PP} = 5A, t_p = 8/20ì s			15	V
		I_{PP} = 6.0A, t_p = 8/20ì s			18	V
C_J	Junction Capacitance	V_R = 0V, f = 1MHz		45	60	pF

Typical Characteristics

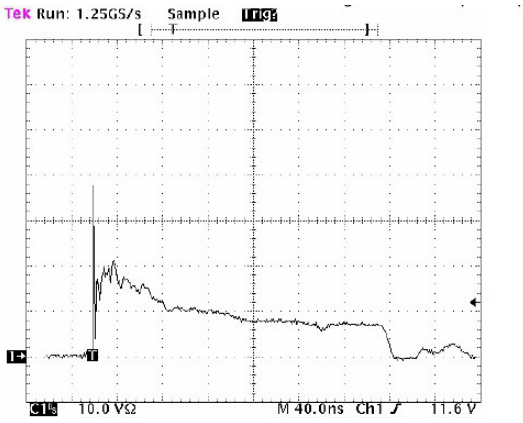

Figure 1. ESD Clamping Voltage Screenshot
Positive 8 kV contact per IEC 61000-4-2

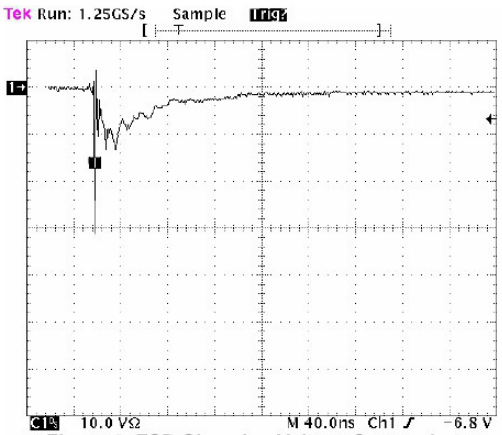

Figure 2. ESD Clamping Voltage Screenshot
Negative 8 kV contact per IEC 61000-4-2

Outline And Dimensions

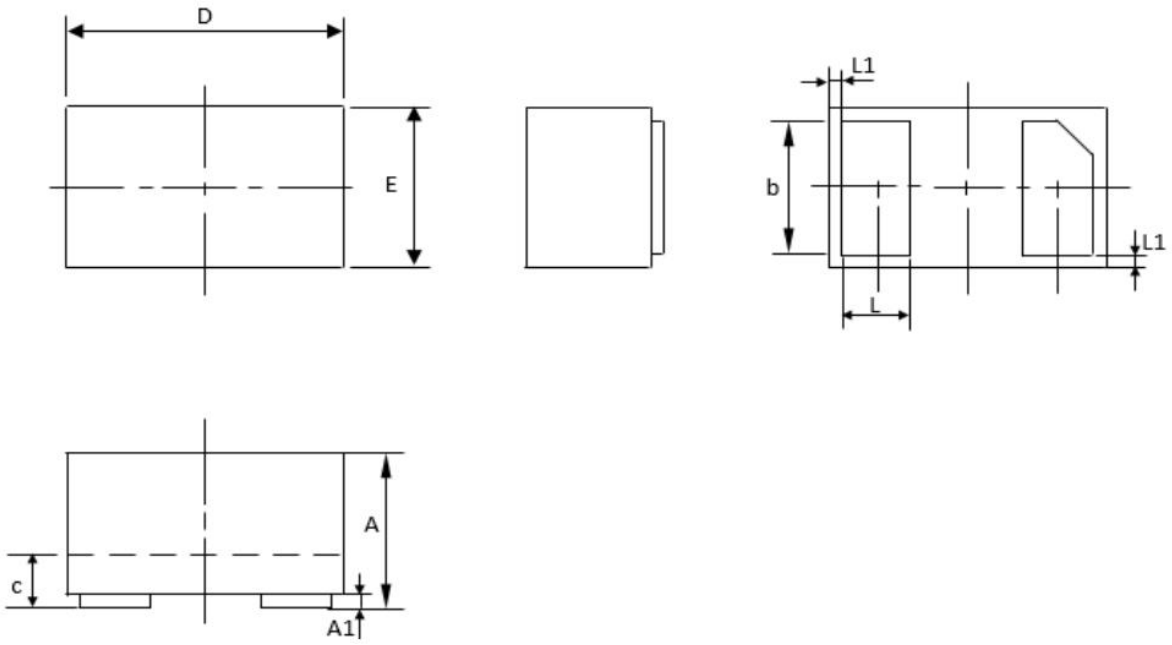

DFN1006-2L(DFN1006-2A)			
Dim	Min	Typ.	Max
A	0.46	0.48	0.50
A1	0	0.02	0.05
b	0.45	0.5	0.55
c	0.1	0.12	0.14
D	0.95	1.00	1.05
E	0.55	0.60	0.65
L	0.20	0.25	0.30
L1	0.035	0.05	0.065
h	0.07	0.12	0.17
All Dimensions in mm			

Attention

■ Any and all HUA XUAN YANG ELECTRONICS products described or contained herein do not have specifications that can handle applications that require extremely high levels of reliability, such as life-support systems, aircraft's control systems, or other applications whose failure can be reasonably expected to result in serious physical and/or material damage. Consult with your HUA XUAN YANG ELECTRONICS representative nearest you before using any HUA XUAN YANG ELECTRONICS products described or contained herein in such applications.

■ HUA XUAN YANG ELECTRONICS assumes no responsibility for equipment failures that result from using products at values that exceed, even momentarily, rated values (such as maximum ratings, operating condition ranges, or other parameters) listed in products specifications of any and all HUA XUAN YANG ELECTRONICS products described or contained herein.

■ Specifications of any and all HUA XUAN YANG ELECTRONICS products described or contained herein stipulate the performance, characteristics, and functions of the described products in the independent state, and are not guarantees of the performance, characteristics, and functions of the described products as mounted in the customer's products or equipment. To verify symptoms and states that cannot be evaluated in an independent device, the customer should always evaluate and test devices mounted in the customer's products or equipment.

■ HUA XUAN YANG ELECTRONICS CO.,LTD. strives to supply high-quality high-reliability products. However, any and all semiconductor products fail with some probability. It is possible that these probabilistic failures could
give rise to accidents or events that could endanger human lives, that could give rise to smoke or fire, or that could cause damage to other property. When designing equipment, adopt safety measures so that these kinds of accidents or events cannot occur. Such measures include but are not limited to protective circuits and error prevention circuits for safe design, redundant design, and structural design.

■ In the event that any or all HUA XUAN YANG ELECTRONICS products(including technical data, services) described or contained herein are controlled under any of applicable local export control laws and regulations, such products must not be exported without obtaining the export license from the authorities concerned in accordance with the above law.

■ No part of this publication may be reproduced or transmitted in any form or by any means, electronic or mechanical, including photocopying and recording, or any information storage or retrieval system, or otherwise, without the prior written permission of HUA XUAN YANG ELECTRONICS CO.,LTD.

■ Information (including circuit diagrams and circuit parameters) herein is for example only ; it is not guaranteed for volume production. HUA XUAN YANG ELECTRONICS believes information herein is accurate and reliable, but no guarantees are made or implied regarding its use or any infringements of intellectual property rights or other rights of third parties.

■ Any and all information described or contained herein are subject to change without notice due to product/technology improvement, etc. When designing equipment, refer to the "Delivery Specification" for the HUA XUAN YANG ELECTRONICS product that you intend to use.

Unikeyic Electronics

Global Electronic Components Distributor

Click to view pricing, inventory, delivery, and lifecycle information:

HXY MOSFET:

BZT52C3V3S HAD8542ARZ HOPA2340UA PESD5V0S1BB SS5150B SS510C P6SMB33CA SS1045 TPSMB28A-VR BZT52C13 HC4D20120A HESDNC5VB1AF-B HMCP602-I/SN MAX487ESA HC3D10170A P6SMB36CA SD15C DTC143ZE HT7150 HXY2101EI HXY2300MI IRLML6246PBF SQJA04EP-T1_BE3 US2M HT7540-1 HXY8205ES MMBT3904T P6SMB200A SS10100 TPSMB100CA-VR