标 记 MARK	ECN编号/变更内容 ECN NO/DEFINITION	修 改 REVISE	日 期 DATE	核 准 APPROVE

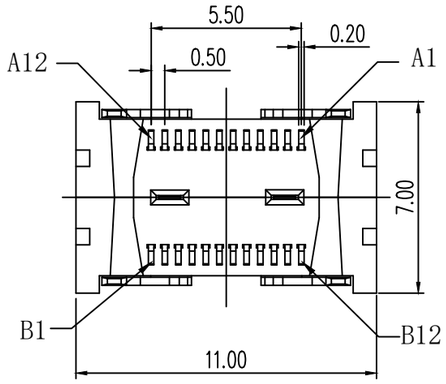

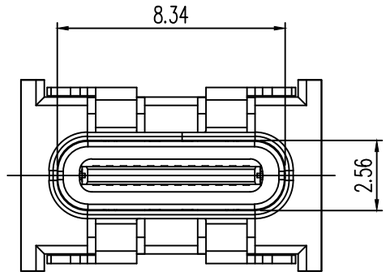

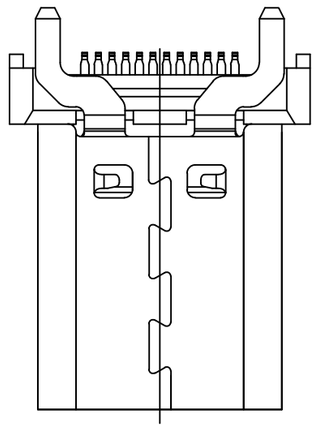

PIN NUMBER	SIGNAL NAME	PIN NUMBER	SIGNAL NAME
A1	GND	B12	GND
A2	SSTXp1	B11	SSRXp1
A3	SSTXn1	B10	SSRXn1
A4	VBUS	B9	VBUS
A5	CC1	B8	SBU2
A6	Dp1	B7	Dn2
A7	Dn1	B6	Dp2
A8	SBU1	B5	CC2
A9	VBUS	B4	VBUS
A10	SSRXn2	B3	SSTXn2
A11	SSRXp2	B2	SSTXp2
A12	GND	B1	GND

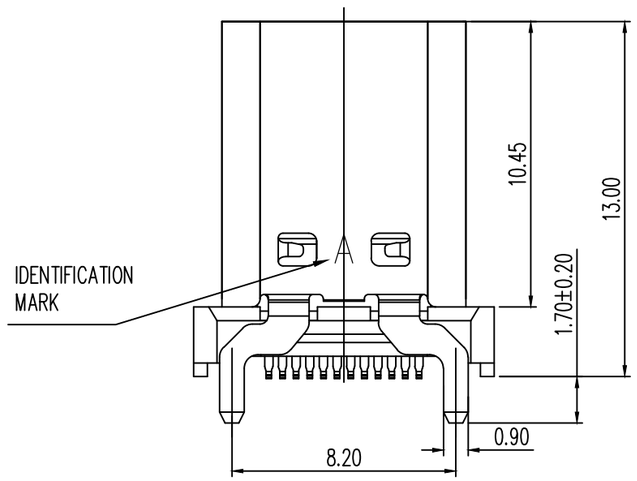

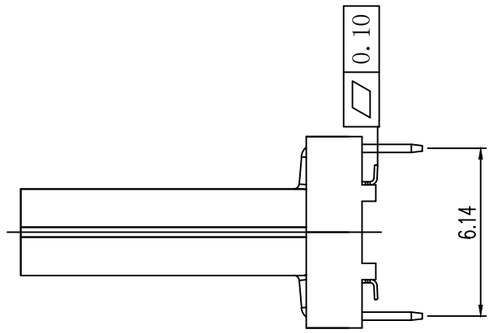

NOTE:
1. Contact Resistance:40mOHM Max.;
2. Dielectric Withstanding Voltage:
   100V AC For 1 Minute;
3. Insulation Resistance:100M OHM Min.;
4. Mating And Unmating Force:
   Mating Force: 5~20N
   Unmating Force: 8~20N;
   6~20N AFTER TEST;
5. Durability:10000 Cycles;

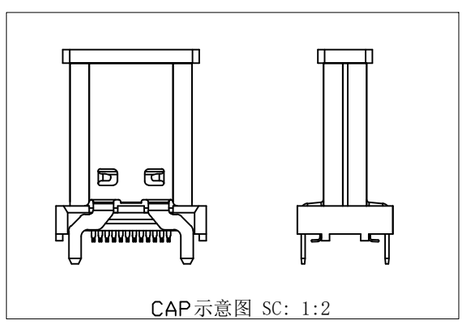

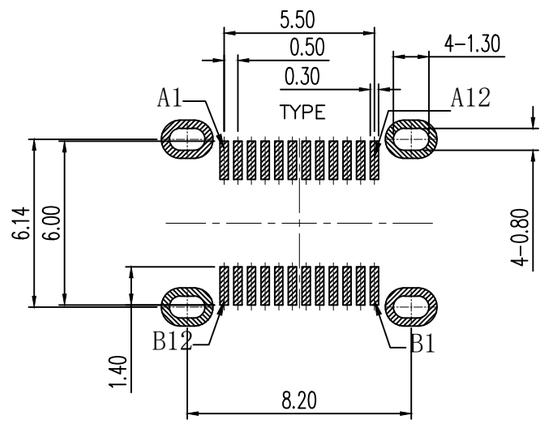

RECOMMEND P.C.B LAYOUT(COMPONENT SIDE)

TOLERANCE FOR PCB LAYOUT IS ± 0.05

3	外壳	不锈钢	镀镍	
2	接触	铜	镀金	
1	基座	LCP	黑色	
序 号	品 名	材 质	电镀/颜色	备 注

深圳市虹成电子有限公司	品 名 TITLE	TYPE-C母座	
	料 号 PART NO	HC-TYPE-C-24P-LT038A	
GENERAL TOLERANCES (UNLESS SPECIFIED)	比 列 SCALE	1:1	
±0.30 X.° ±2° ±0.20 .X° ±1° ±0.15 .XX° .XXX ±0.05 .XXX°	单 位 UNIT	MM	制 图 DRAW: AhYe
	张 数 PART NO	1 OF 1	审 核 CHECKED: 夏操云
	版 本 REV	A	批 准 APPROVE: 赵亮亮

Unikeyic Electronics

Global Electronic Components Distributor

Click to view pricing, inventory, delivery, and lifecycle information:

HC:

HC-PZ254-11.5L-1x10PZ HCZZ0451-4 HC-FPC-0.5-50P-FHH20 HC-PHB2.0-2x5A HCZZ0032-6
HC-FPC-0.5-10P-FH20 HC-FPC-0.5-40P-FH20 HC-FPC-0.5-6P-CSH20 HC-PM254-8.5H-2x20PS
HC-PZ254-13.8L-1x6PWA HC-PHB2.0-2x4AW HCZZ0001-2 HCZZ0001-6 HCZZ0530-4
HC-PM200-4.3H-2x20PZ HC-USB2.0-L100-093P HC-USB3.0-L175-2X1-J HCZZ0514-6 HCZZ0576-5
HC-PM254-5.0H-2x10PZ HC-PZ127-7.2L-2x3PS HC-PZ254-11.5L-1x20PZ HC-PZ254-11.5L-2x18PZ
HC-USB3.0-C34-P HC-USB3.0-L257-J HC-FPC-0.5-24P-FH20 HC-PM254-8.5H-1x21PZ HC-USB3.0-C26
HCZZ0451-6 HC-PM200-4.3H-2x8PS