DESCRIPTION

The TL431ACxxxx is a three-terminal adjustable regulator series with a guaranteed thermal stability over applicable temperature ranges. The output voltage may be set to any value between Vref (approximately 2.5 volts) and 40 volts with two external resistors. These devices have a typical dynamic output impedance of 0.2Ω.Active output circuitry pr ovides avery sharp turn-on characteristic,,making these devices excellent replacement for zener diodes in many appli cations.

FEATURES

- Programmable Output Voltage to 36V
- Low Dynamic Output Impedance 0.27Ω (Typ)
- Sink Current Capability of 0.1mA to 100mA
- Equivalent Full-Range Temperature Coefficient of 50 ppm/℃
- Temperature Compensated for Operation over Full Rated Operating Temperature Range
- Low Output Noise Voltage
- Fast Turn on Respons
- SOP-8, SOT89-3 or SOT-23 packages

Reference News

PIN CONFIGURATION	MARKING
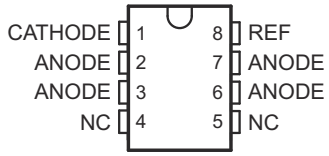 NC – No internal connection	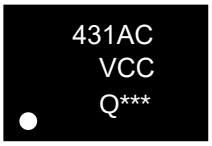 SOP-8

PIN CONFIGURATION	MARKING
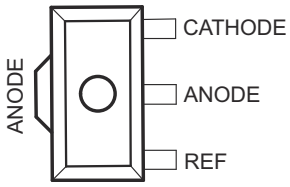	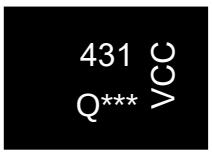 SOT89-3

PIN CONFIGURATION	MARKING
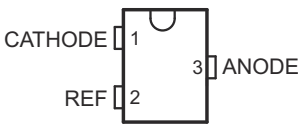	 SOT-23

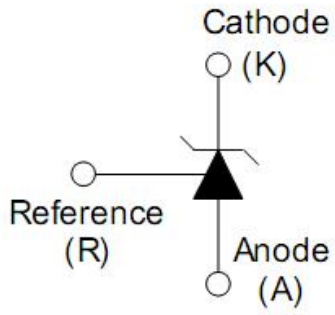

Symbol

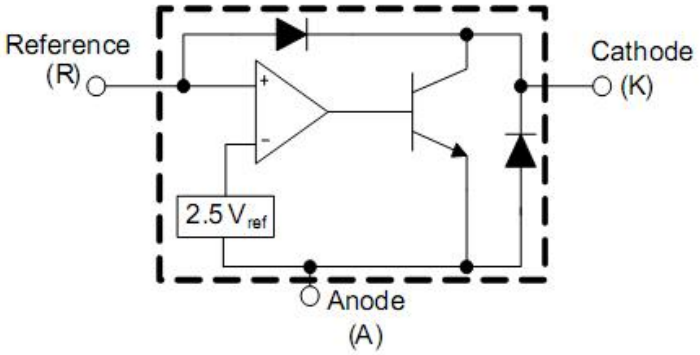

Representative Block diagram

ORDER INFORMATION

P/N	PKG	QTY
TL431ACDR	SOP-8	2500
TL431ACDBZR	SOT-23	3000
TL431ACPK	SOT89-3	1000

ABSOLUTE MAXIMUM RATINGS

(Operating temperature range applies unless otherwise specified)

Characteristic	Symbol	Value	Unit
Cathode Voltage	V_{KA}	36	V
Cathode Current Range (Continuous)	I_K	-100 ~ 150	mA
Reference Input Current Range	I_{REF}	-0.05 ~ +10	mA
Power Dissipation at 25°C: TO – 92 Package ($R_{\theta JA}$ = 178°C/W) SOT – 23 – 3 Package ($R_{\theta JA}$ = 625°C/W)	P_D	 0.7 0.2	 W W
Junction Temperature Range	T_J	-40 ~ 150	°C
Storage Temperature Range	T_{stg}	-65 ~ +150	°C

RECOMMENDED OPERATING CONDITIONS

Characteristic	Symbol	Test Condition	Min	Typ	Max	Unit
Cathode Voltage	V_{KA}		V_{REF}		36	V
Cathode Current	I_K		0.5		100	mA

ELECTRICAL CHARACTERISTICS

(T_a = 25°C, V_{KA} = V_{REF}, I_K = 10mA unless otherwise specified)

Characteristic	Symbol	Test Condition	Min	Typ	Max	Unit
Reference Input Voltage	V_{REF}	V_{KA} = V_{REF}, I_K = 10mA	2.483	2.495	2.507	V
Deviation of Reference Input Voltage Over Full Temperature Range	$V_{REF(dev)}$	T_{min} ≤ Ta ≤ T_{max}		3	17	mV
Ratio of Change in Reference Input Voltage to the Change in Cathode Voltage	$\Delta V_{REF}/\Delta V_{KA}$	ΔV_{KA} = 10V-V_{REF} ΔV_{KA} = 36V- 10V	-0.4 -0.4	0.0 0.0	2.7 2.0	mV/V
Reference Input Current	I_{REF}	R_1 = 10KΩ, R_2 = ∞		1.8	4	μA
Deviation of Reference Input Current Over Full Temperature Range	$I_{REF(dev)}$	R_1 = 10KΩ, R_2 = ∞		0.4	1.2	μA
Minimum Cathode Current for Regulation	$I_{K(min)}$			0.25	0.5	mA
Off-State Cathode Current	$I_{K(off)}$	V_{KA} = 40 V, V_{REF} = 0		0.17	0.9	μA
Dynamic Impedance	Z_{KA}	I_K = 1mA 100 mA , f ≤ 1.0KHz		0.27	0.5	Ω

TEST CIRCUITS

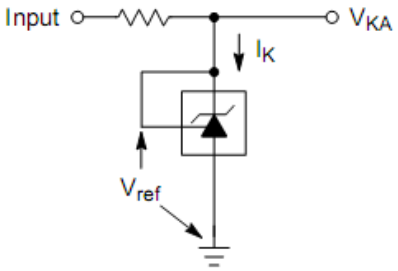

Test Circuit for V_{KA} = V_{ref}

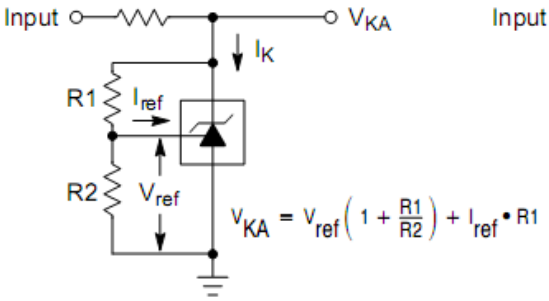

Test Circuit for V_{KA} > V_{ref}

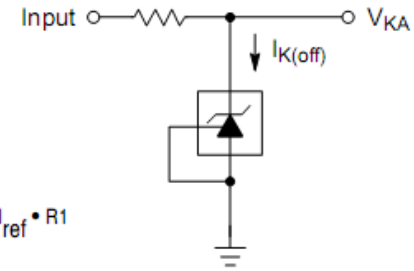

Test Circuit for $I_{K(off)}$

PAD LAYOUT

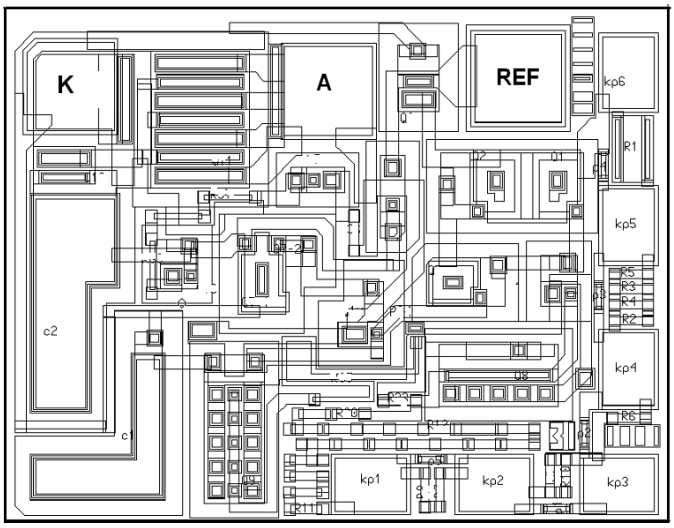

PHISICAL CHARACTERISTICS:

Wafer Diameter.....100 ± 0.5mm
Wafer Thickness..... .... 260 ±20 μm
Die size.....0.76 x 0.60 mm^2
Scribe Width.....60 μm
Pad Size .....86 x 86 μm
Passivation.....PECVD

Backside metallization .....without metallization

PAD LOCATION

Pad Name	Description	X	Y
K	Cathode	56	445
A	Anode	328	440
R	Reference	528	453

BONDING DIAGRAM

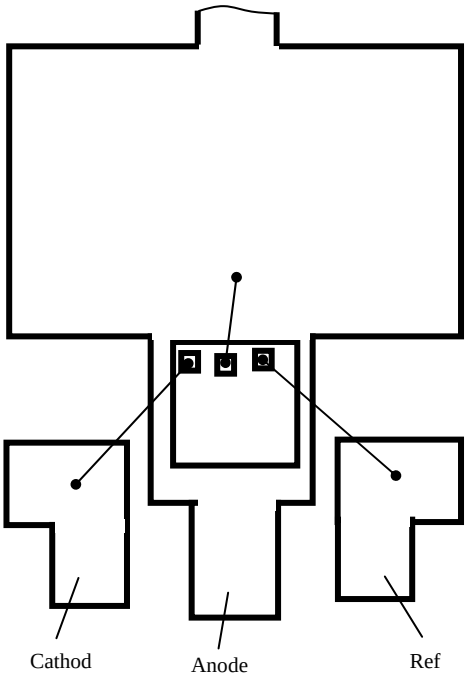

TYPICAL PERFORMANCE CHARACTERISTICS

Cathode Current Ik (mA)
vs. Cathode Voltage Uk (V)

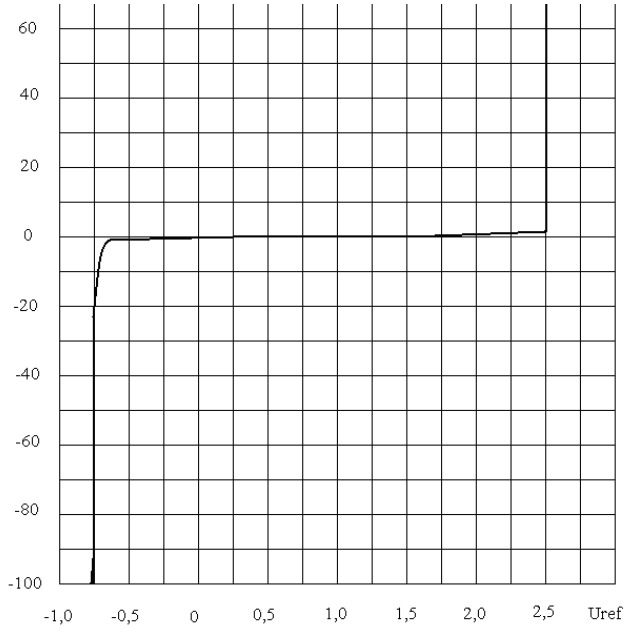

Cathode Current Ik (uA)
vs. Cathode Voltage Uk (V)

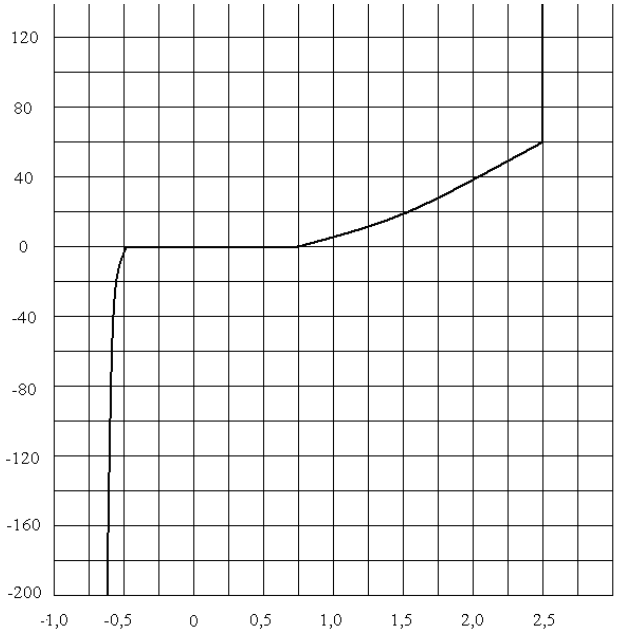

Reference Voltage Uref (V)
vs. Junction Temperature Tj (°C)
Ik=10mA

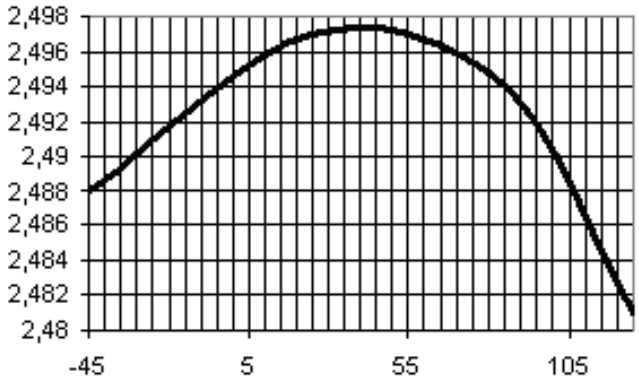

Reference Input Current Iref (uA)
vs. Junction Temperature Tj (°C)
Ik=10mA

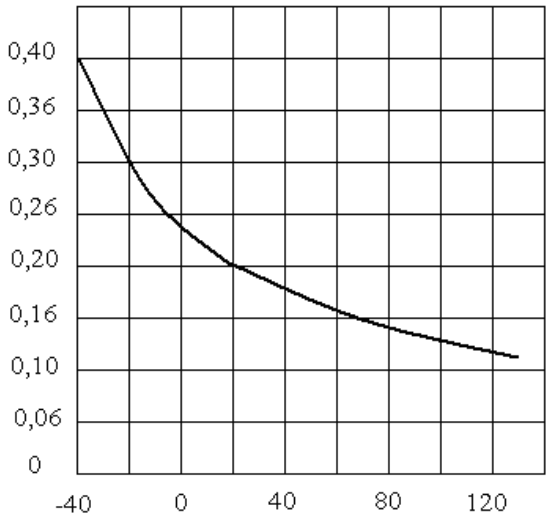

Off−State Cathode Current Ikoff (uA)
vs. Junction Temperature Tj (°C)
Uka=36V

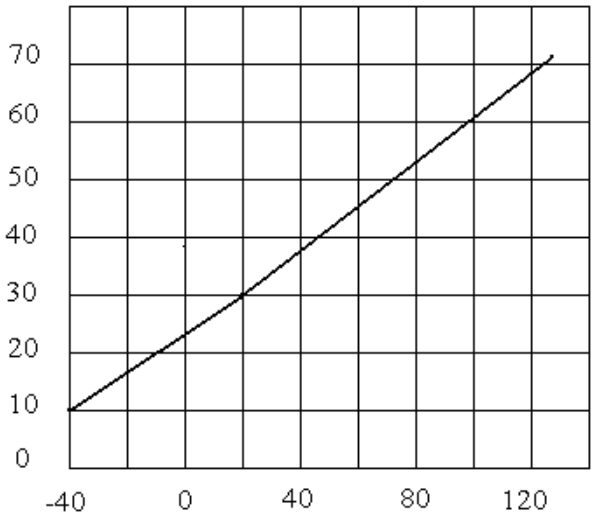

Dynamic Impedance Zka (Ohm)
vs. Junction Temperature Tj (°C)
I_K = 1÷100 mA

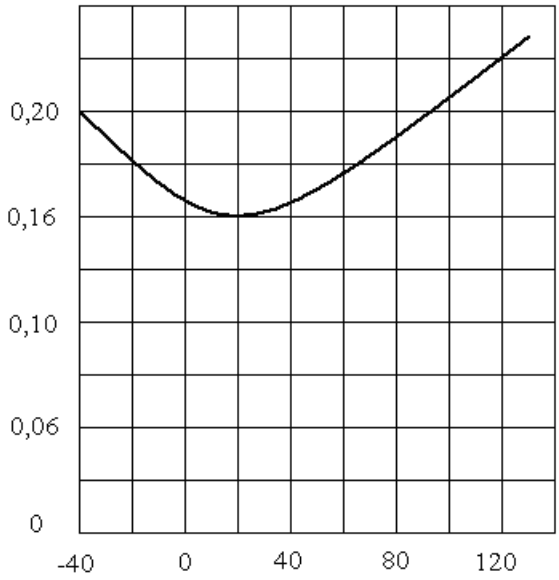

Pulse Response Input and Output Voltage (V)
vs. Time t (uS)

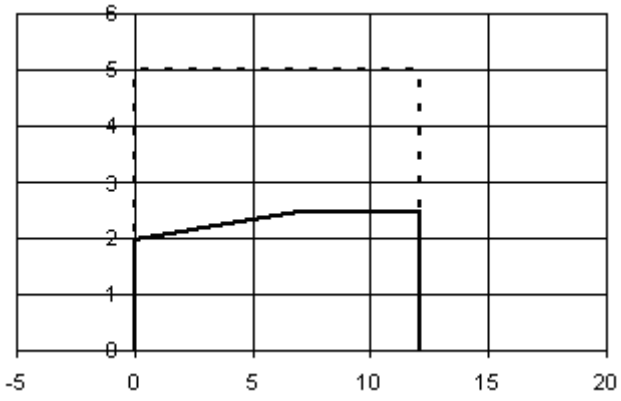

SOT-23 PACKAGE INFORMATION

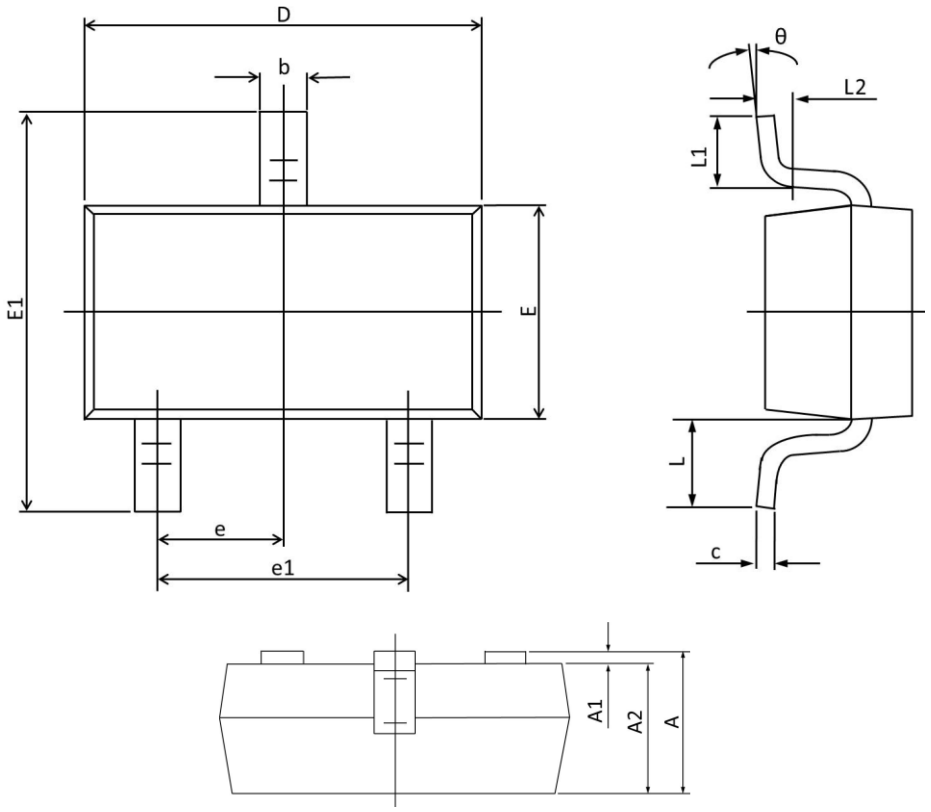

Symbol	DimensionsIn Millimeters		Dimensions In Inches	
	Max	Min	Max	Min
A	1.150	0.900	0.045	0.035
A1	0.100	0.000	0.004	0.000
A2	1.050	0.900	0.041	0.035
b	0.500	0.300	0.020	0.012
c	0.150	0.080	0.006	0.003
D	3.000	2.800	0.118	0.110
E	1.400	1.200	0.055	0.047
E1	2.550	2.250	0.100	0.089
e	0.95 TYP.		0.037 TYP.	
e1	2.000	1.800	0.079	0.071
L	0.55 REF.		0.022 REF.	
L1	0.500	0.300	0.020	0.012
L2	0.25 TYP.		0.01 TYP.	
θ	8°	0°	8°	0°

SOT-89 PACKAGE MECHANICAL DATA

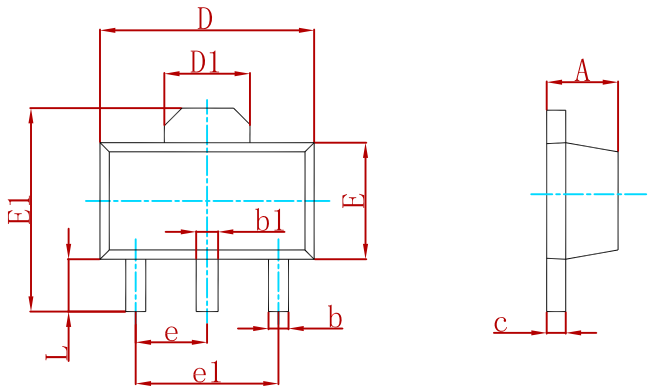

Symbol	Dimensions In Millimeters		Dimensions In Inches	
	Min	Max	Min	Max
A	1.400	1.600	0.055	0.063
b	0.320	0.520	0.013	0.020
b1	0.400	0.580	0.016	0.023
c	0.350	0.440	0.014	0.017
D	4.400	4.600	0.173	0.181
D1	1.550 REF.		0.061 REF.	
E	2.300	2.600	0.091	0.102
E1	3.940	4.250	0.155	0.167
e	1.500 TYP.		0.060 TYP.	
e1	3.000 TYP.		0.118 TYP.	
L	0.900	1.200	0.035	0.047

SOP-8 PACKAGE MECHANICAL DATA

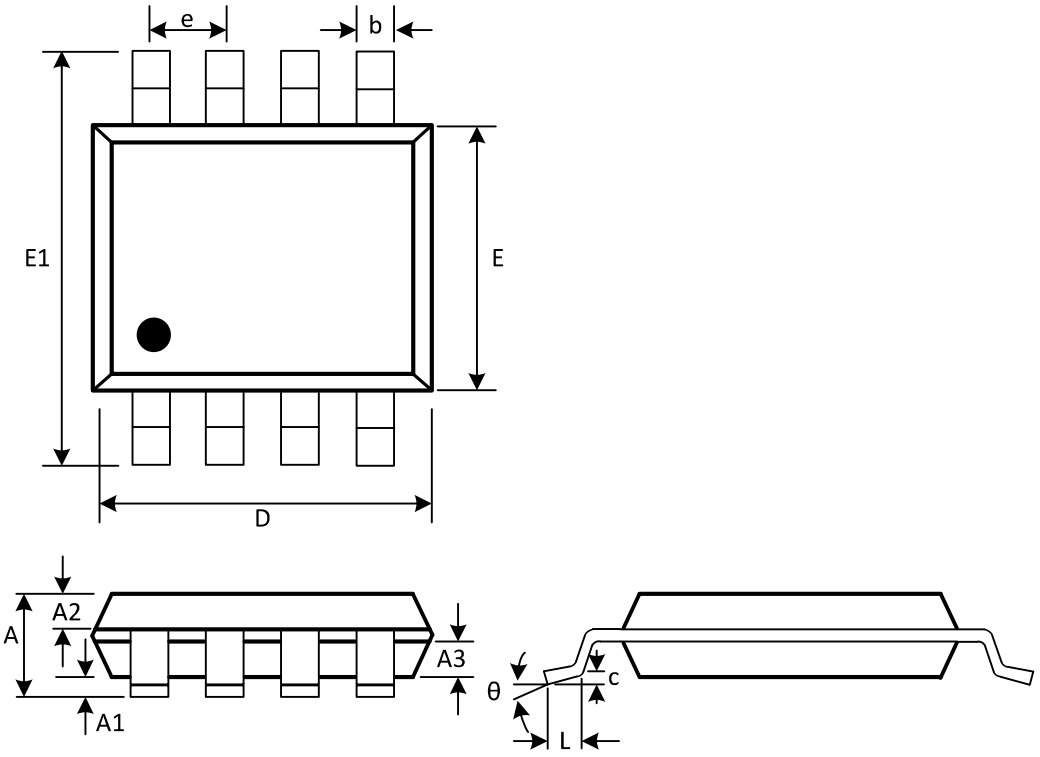

(Unit: mm)

Symbol	Min	Max
A	1.300	1.600
A1	0.050	0.200
A2	0.550	0.650
A3	0.550	0.650
b	0.356	0.456
c	0.203	0.233
D	4.800	5.000
e	1.270(BSC)	
E	3.800	4.000
E1	5.800	6.200
L	0.400	0.800
θ	0°	8°