TFI-SERIES
TFIS 24-240VUC 1CO ON

Weidmüller Interface GmbH & Co. KG
Klingenbergstraße 26
D-32758 Detmold
Germany
Fon: +49 5231 14-0
Fax: +49 5231 14-292083
www.weidmueller.com

Product image



Timing relays are used in automation engineering in order to compensate for malfunctions caused by high clock rates.
Short pulses are extended and hence are reliably identified by downstream control components.
Various timing functions such as make and break delays, clock generator and star/delta switchover are available to users.

General ordering data

Type	TFIS 24-240VUC 1CO ON
Order No.	2697280000
Version	TFI-SERIES, On-delay timing relay, Number of contacts: 1, CO contact, AgNi, Rated control voltage: 24...240 V UC -15 % / +10 %, Continuous current: 8 A, Screw connection
GTIN (EAN)	4050118705294
Qty.	1 pc(s).

TFI-SERIES
TFIS 24-240VUC 1CO ON

Weidmüller Interface GmbH & Co. KG
Klingenbergstraße 26
D-32758 Detmold
Germany
Fon: +49 5231 14-0
Fax: +49 5231 14-292083
www.weidmueller.com

Technical data

Dimensions and weights

Width	17.5 mm	Width (inches)	0.689 inch
Height	87 mm	Height (inches)	3.425 inch
Depth	60 mm	Depth (inches)	2.362 inch
Net weight	74.54 g		

Temperatures

Humidity	15...85 % rel. humidity, no condensation	Operating temperature, max.	55 °C
Operating temperature, min.	-25 °C	Storage temperature, max.	70 °C
Storage temperature, min.	-25 °C	Operating temperature	-25 °C...55 °C
Storage temperature	-25 °C...70 °C		

Input

Rated control voltage	24...240 V UC - 15 % / + 10 %	Power rating	4 VA, 1.5 W
Status indicator	LED green (U/t): flashes when time runs, lights permanently with supply voltage applied, LED yellow (R): relay closed	Repeat accuracy	< 0.5 % or ±5 ms
Setting tolerance	5 %	Basic accuracy	± 1 % (of scale-end value)
Min. pulse duration	100 ms	Time ranges	0.05 s - 1 s, 0.5 s - 10 s, 3 s - 60 s, 30 s - 10 min, 3 min - 1 h, 30 min - 10 h, 5 h - 100 h
Timing function	On delay	Max. reset time after voltage interruption	100 ms

Output

Rated switching voltage	250 V AC	Max. switching voltage, AC	250 V
Max. switching voltage, DC	30 V	Continuous current	8 A
AC switching capacity (resistive), max.	2000 VA	DC switching capacity (resistive), max.	240 W
Min. switching power	10 mA @ 12 V, 100 mA @ 5 V		

Contact data

Contact type	1 CO contact (AgNi)	Electrical service life, DC coil	$2x10^5$ switching cycles (1000 VA ohm load)
Mechanical service life	20 x 10^6 switching cycles		

General data

Rail	TS 35	Test button	No
Mechanical switch position indicator	No	Colour	black
Resistance to vibration EN 61812-1	10 Hz...60 Hz: 0.15 mm, 60 Hz...150 Hz: 2 g		

TFI-SERIES
TFIS 24-240VUC 1CO ON

Weidmüller Interface GmbH & Co. KG
Klingenbergstraße 26
D-32758 Detmold
Germany
Fon: +49 5231 14-0
Fax: +49 5231 14-292083
www.weidmueller.com

Technical data

Insulation coordination

Rated voltage	300 V	Surge voltage category	III
Pollution severity	2	Protection degree	IP20
Dielectric strength, Input/Output	1.6 kV	Creepage and clearance distance input – output	≥ 3 mm
Impulse withstand voltage	4 kV		

Further details of approvals / standards

Certificate no. (cULus)	E360862

Connection data

Wire connection method	Screw connection	Stripping length, rated connection	8 mm
Tightening torque, max.	1 Nm	Clamping range, rated connection	2.5 mm²
Clamping range, min.	0.5 mm²	Clamping range, max.	4 mm²
Wire connection cross section AWG, min.	AWG 20	Wire connection cross section AWG, max.	AWG 12
Wire cross-section, solid, min.	0.5 mm²	Wire cross-section, solid, max.	4 mm²
Wire connection cross-section, finely stranded, min.	0.5 mm²	Wire connection cross section, finely stranded, max.	4 mm²
Wire connection cross-section, finely stranded with wire-end ferrules DIN 46228/4, min.	0.5 mm²	Wire connection cross-section, finely stranded with wire-end ferrules DIN 46228/4, max.	2.5 mm²
Conductor cross-section, flexible, AEH (DIN 46228-1), min.	0.5 mm²	Conductor cross-section, flexible, AEH (DIN 46228-1), max.	2.5 mm²
Wire connection cross section, finely stranded, two clampable wires, min.	0.5 mm²	Wire cross-section, finely stranded, two clampable wires, max.	2.5 mm²
Blade size	size PZ1		

Classifications

ETIM 6.0	EC001439	ETIM 7.0	EC001439
eClass 9.0	27-37-16-05	eClass 9.1	27-37-16-05
eClass 10.0	27-37-16-05		

Approvals

Approvals	
ROHS	Conform

Downloads

Approval/Certificate/Document of Conformity	EU Konformitätserklärung / EU Declaration of Conformity
Engineering Data	STEP
User Documentation	Beschreibung der Zeitfunktionen - Deutsch Declaration of time functions - English Beipackzettel / Package Insert – multilingual

TFI-SERIES
TFIS 24-240VUC 1CO ON

Weidmüller Interface GmbH & Co. KG
Klingenbergstraße 26
D-32758 Detmold
Germany
Fon: +49 5231 14-0
Fax: +49 5231 14-292083
www.weidmueller.com

Drawings

Wiring diagram

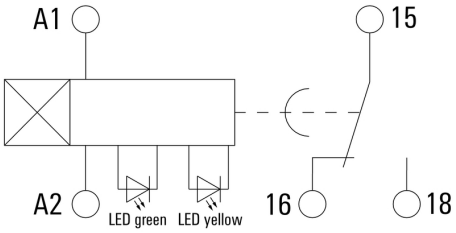

Dimensional drawing

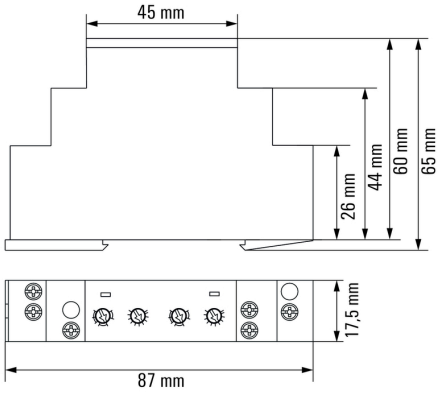

Miscellaneous

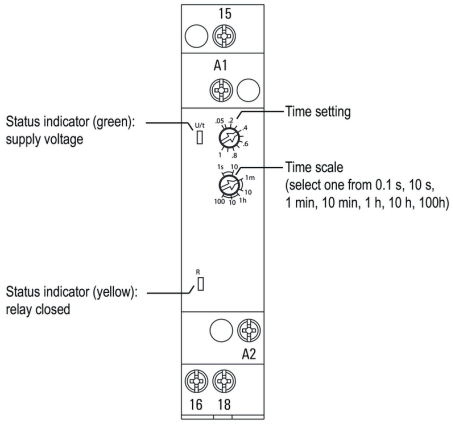

Detailed drawing

TFI-SERIES
TFIS 24-240VUC 1CO ON

Weidmüller Interface GmbH & Co. KG
Klingenbergstraße 26
D-32758 Detmold
Germany
Fon: +49 5231 14-0
Fax: +49 5231 14-292083
www.weidmueller.com

Drawings

Graph

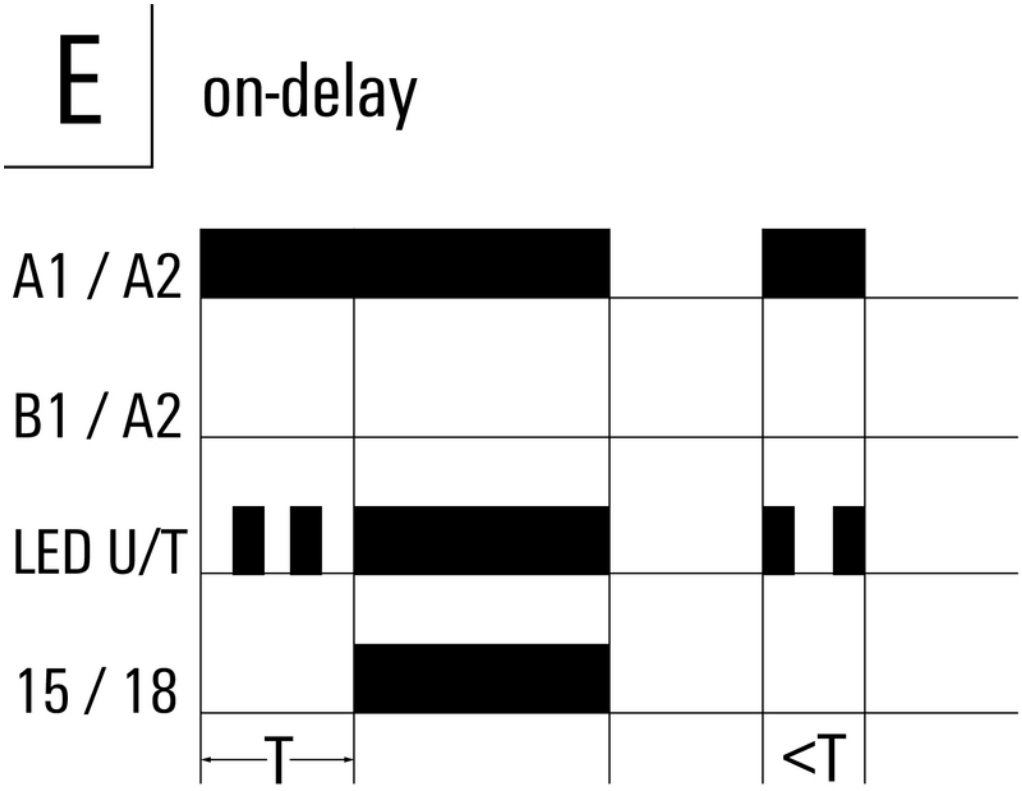

Time functions

TFI-SERIES
TFIS 24-240VUC 1CO ON

Weidmüller Interface GmbH & Co. KG
Klingenbergstraße 26
D-32758 Detmold
Germany
Fon: +49 5231 14-0
Fax: +49 5231 14-292083
www.weidmueller.com

Drawings

Miscellaneous

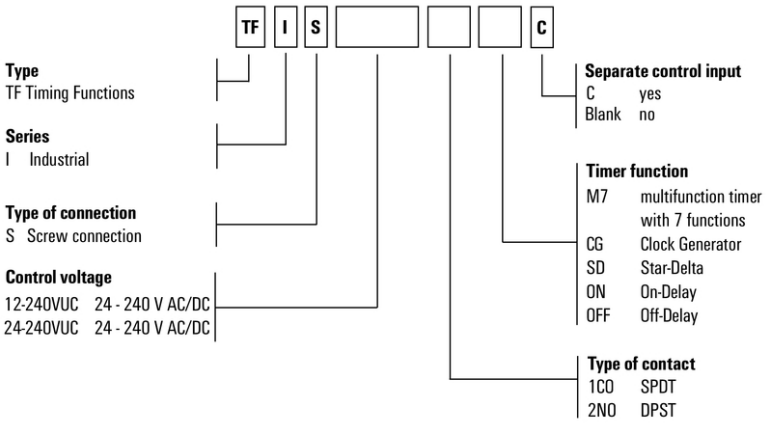

Type codes

Unikeyic Electronics

Global Electronic Components Distributor

Click to view pricing, inventory, delivery, and lifecycle information:

WeidmÃ¼ller:

1124150000 1786450000 1818090500 8951460000 1013450000 024892 SAKS3 1221360000 1906650000
0303620000 1127570000 1609820000 1760040000 1784180000 1890260000 1607520000 1649300000
1950200000 2535780000 2642470000 8690200000 9037380000 1121990000 1289470000 1608830000
1779950000 1804580000 1031470000 1608570000 1622940000 9456650000