标 记 MARK	ECN编号/变更内容 ECN NO/DEFINITION	修 改 REVISE	日 期 DATE	核 准 APPROVE

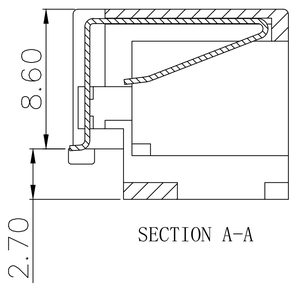

SECTION A-A

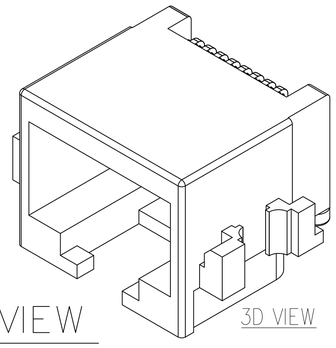

3D VIEW

3D VIEW

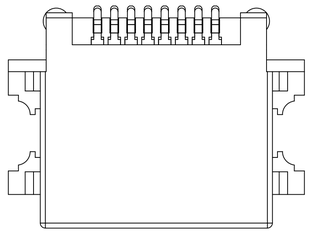

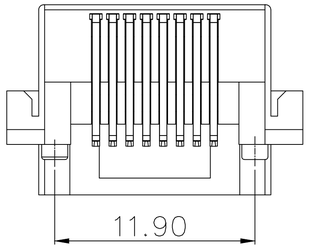

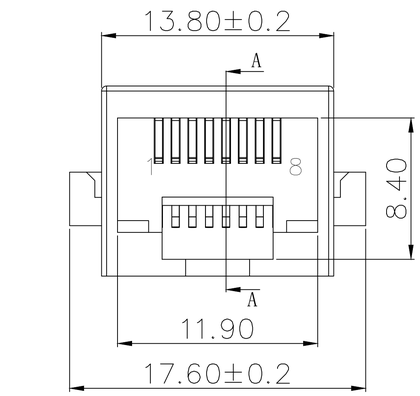

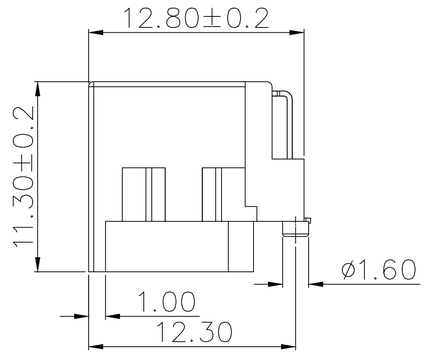

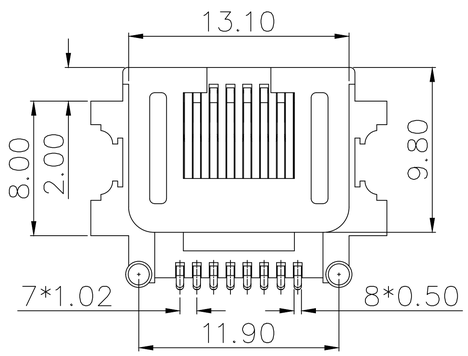

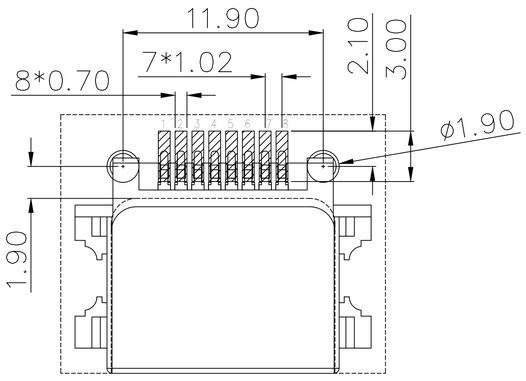

PAD AREA (TOP VIEW)

NOTES:

1. MATERIAL:
   1.1. HOUSING: LCP ,COLOR IS BLACK;
   1.2. CONTACT: PHOSPHOR COPPER (C5191 T=0.30mm);
2. FINISH: GOLD PLATED G/Fu";
4. ELECTRICAL:
   4.1. VOLTAGE RATING: 125 VAC RMS;
   4.2. CURRENT RATING: 1.5 AMP;
   4.3. CONTACT RESISTANCE: 35MILLIOHMS MAX.;
   4.4. WITHSTAND VOLTAGE: 500 VAC RMS 50(60)Hz,1MIN.;
   4.5. INSULATION RESISTANCE: 500MEGOHMS MIN @500V DC.;
5. MECHANICAL:
   5.1. MATING/UNMATING FORCE: 22N MAX.;
   5.2. RETENTIION STRENGTH: 50N MIN.;
   5.3. OPERATING LIFE: 750 CYCLES MIN.;
6. ENVIRONMENTAL:
   6.1. STORAGE TEMPERATURE RANGE: -40℃~+85℃;
   6.2. OPERATION TEMPERATURE RANGE: -25℃~+70℃;
7. SALT SPRAY TEST: 8H(EXCLUDING RIVETED BENDS)

序 号	品 名	材 质	电镀/颜色	备 注
2	接触	铜	镀金G/F	
1	基座	LCP	黑色	

深圳市虹成电子有限公司	品 名 TITLE	网口		
	料 号 PART NO	HC-WK88-H865T-QS		
UNLESS OTHERWISE, GENERAL TOLERANCE:	比 列 SCALE	1:1		
X.xxx ±0.10 X.xx ±0.20 X.x ±0.30 ANGULAR: X.xx° ±1° X.x° ±3° X.° ±5°	单 位 UNIT	MM	制 图 DRAW	AhYe
	张 数 PART NO	1 OF 1	审 核 CHECKED	夏操云
	版 本 REV	A	批 准 APPROVE	赵亮亮

Unikeyic Electronics

Global Electronic Components Distributor

Click to view pricing, inventory, delivery, and lifecycle information:

HC:

HC-PZ254-11.5L-2x18PZ HCZZ0530-4 HC-FPC-0.5-10P-FH20 HC-PHB2.0-2x4AW HC-PM200-4.3H-2x20PZ
HC-USB3.0-C34-P HCZZ0001-4 HCZZ0032-6 HCZZ0451-3 HCZZ0451-6 HC-PM200-4.3H-2x8PS
HC-PM254-5.0H-2x10PZ HC-PZ254-13.8L-1x6PWA HCZZ0001-6 HCZZ0451-4 HC-FPC-0.5-24P-FH20
HC-PHB2.0-2x5A HC-USB3.0-L175-2X1-J HCZZ0576-5 HC-USB3.0-L257-J HC-PM254-8.5H-1x21PZ
HC-USB3.0-C26 HC-FPC-0.5-50P-FHH20 HC-FPC-0.5-6P-CSH20 HC-PM254-8.5H-2x20PS
HC-PZ127-7.2L-2x3PS HCZZ0001-2 HCZZ0514-6 HC-PZ254-11.5L-1x10PZ HC-FPC-0.5-40P-FH20