SHHD001A3B Hammerhead* Series; DC-DC Converter Power Modules

18-75Vdc Input; 12Vdc, 1.3A, 15W Output

RoHS Compliant



Description

The SHHD001A3B Hammerhead series power modules are isolated dc-dc converters that operate over an ultra-wide input voltage range of 18 Vdc -75Vdc (85Vdc, SHHS) and provide a single precisely regulated output voltage at 12Vdc. This series is a low cost, smaller size alternative to the existing LW/LAW/LC/SC/SW with enhanced performance parameters. The output is fully isolated from the input, allowing versatile polarity configurations and grounding connections. The modules exhibit high efficiency of 87.5% typical at full load. Built-in filtering for both input and output minimizes the need for external filtering. The module is fully self-protected with output over -current and over-voltage, over-temperature and input under voltage shutdown control. Optional features include negative or positive on/off logic and SMT connections.

Applications

- Wireless Networks
- Hybrid power architectures
- Optical and Access Network Equipment
- Enterprise Networks including Power over Ethernet (PoE)
- Industrial markets

Options

- Active Droop Load Sharing (-P Suffix)
- Negative Remote On/Off logic
- Surface Mount/Tape and Reel (-SR Suffix)

See Footnote On Page No. 5

© 2023 OmniOn Power Inc. All rights reserved.

Features

- Compliant to RoHS Directive 2011/65/EU and amended Directive (EU) 2015/863 (-Z versions)
- Compliant to REACH Directive (EC) No 1907/2006
- Ultra-wide Input Voltage Range, 18vdc to 75Vdc (SHHD) 18Vdc 85Vdc (SSHS)
- No minimum load
- High efficiency – 87.5% at full load (V_{IN}=24 or 48Vdc)
- Constant switching frequency
- Low output ripple and noise
- Small Size and low profile, follows industry standard 1x1 footprint 27.9mm x 24.4mm x 8.5mm (MAX) (1.10 x 0.96 x 0.335 in)
- Surface mount (SMT) or Through hole (TH)
- Reflow process compliant, both SMT and TH versions
- Positive Remote On/Off logic
- Output overcurrent/voltage protection (hiccup)
- Over-temperature protection
- Output Voltage adjust: 90% to 110% of Vo, nom
- Wide operating temperature range (-40°C to 85°C)
- ANSI/UL* 62368-1 and CAN/CSA† C22.2 No. 62368-1 Recognized, DIN VDE‡ 0868-1/A11:2017 (EN62368-1:2014/A11:2017)
- CE mark meets 2006/95/EU directive§
- Meets the voltage and current requirements for ETSI 300-132-2 and complies with and licensed for Basic insulation
- 2250 Vdc Isolation tested in compliance with IEEE 802.3¤ PoE standards
- ISO** 9001 and ISO 14001 certified manufacturing facilities

See Footnote on Page No. 5

© 2023 OmniOn Power Inc. All rights reserved.

Absolute Maximum Ratings

Stresses in excess of the absolute maximum ratings can cause permanent damage to the device. These are absolute stress ratings only, functional operation of the device is not implied at these or any other conditions in excess of those given in the operations sections of the data sheet. Exposure to absolute maximum ratings for extended periods can adversely affect the device reliability.

Parameter	Device	Symbol	Min	Max	Unit
Input Voltage (Continuous)	SHHD	V_{IN}	-0.3	80	V_{dc}
	SHHS	V_{IN}	-0.3	85	V_{dc}
Transient (100ms)	All	$V_{IN, trans}$	-0.3	100	V_{dc}
Operating Ambient Temperature (see Thermal Considerations section)	All	T_A	-40	85	°C
Storage Temperature	All	T_{stg}	-55	125	°C
Altitude*	All			4000	m
I/O Isolation Voltage (100% factory Hi-Pot tested)	All	-		2250	V_{dc}

* For higher altitude application, contact your OmniOn sales Representative condition of use.

Electrical Specifications

Unless otherwise indicated, specifications apply over all operating input voltage, resistive load, and temperature conditions.

Parameter	Device	Symbol	Min	Typ	Max	Unit
Operating Input Voltage	SHHD	V_{IN}	18	24/48	75	V_{dc}
	SHHS	V_{IN}	18	24/48	85	V_{dc}
Input No Load Current						
V_{IN} = 24Vdc, (I_O = 0, module enabled)	All	$I_{IN,NO\ LOAD}$		40		mA
V_{IN} = 48Vdc, (I_O = 0, module enabled)	All	$I_{IN,NO\ LOAD}$		30		mA
Input Stand-by Current (V_{IN} = 24 to 48Vdc, module disabled)	All	$I_{IN,stand-by}$		4	6	mA
Maximum Input Current (V_{IN} =18V_{dc}, I_O =$I_{O,\ max}$)	All	$I_{IN,max}$			1.1	A_{dc}
Inrush Transient	All	I^2t			0.05	A^2s
Input Reflected Ripple Current, peak-to-peak (5Hz to 20MHz, 12µH source impedance; V_{IN}=0V to 75V_{dc}, I_O= I_{omax}; see Test configuration section)	All			30		mA_{p-p}
Input Ripple Rejection (120Hz)	All			60		dB
EMC, EN55032		See EMC Considerations section				

CAUTION: This power module is not internally fused. An input line fuse must always be used.

This power module can be used in a wide variety of applications, ranging from simple standalone operation to being part of complex power architecture. To preserve maximum flexibility, internal fusing is not included; however, to achieve maximum safety and system protection, always use an input line fuse. The safety agencies require a fast-acting fuse with a maximum rating of 3A (see Safety Considerations section). Based on the information provided in this data sheet on inrush energy and maximum dc input current, the same type of fuse with a lower rating can be used. Refer to the fuse manufacturer's data sheet for further information.

© 2023 OmniOn Power Inc. All rights reserved.

Electrical Specifications (Continued)

Parameter	Device	Symbol	Min	Typ	Max	Unit
Output Voltage Set-point (V_{IN} =48Vdc, I_O=$I_{O,\,max}$, T_A=25°C)	All w/o -P	$V_{o,set}$	11.82	12.00	12.18	V_{dc}
(V_{IN} =48Vdc, I_O=0A, T_A=25°C)	All w -P	$V_{o,set}$	11.20	12.40	12.60	V_{dc}
Output Regulation						
Line (VIN=VIN, min to VIN, max)	All		-	0.05	0.2	%$V_{o,set}$
Load (IO=IO, min to IO, max)	All		-	0.05	0.2	%$V_{o,set}$
Temperature (T_{ref}=$T_{A,\,min}$ to $T_{A,\,max}$)	All		-	-	1.0	%$V_{o,set}$
Output Voltage	All w/o-P	V_O	-3.0	-	+3.0	%$V_{o,set}$
(Over all operating input voltage, resistive load, and temperature conditions until end of life)	All w -P	V_O	12.1	-	13.3	V_{dc}
Adjustment Range	All w/o-P	$V_{o,adj}$	10.8		13.2	V_{dc}
Selected by external resistor	All w -P			n/a		
Output Ripple and Noise on nominal output						
Measured with 10µF Tantalum||1µF ceramic						
(V_{IN}=24 to 48V_{dc}, I_O=80% $I_{O,\,max}$, T_A=25°C)						
RMS (5Hz to 20MHz bandwidth)			-	-	50	mv_{rms}
Peak-to-Peak (5Hz to 20MHz bandwidth)	All		-	-	150	mV_{pk-pk}
External Capacitance	All w/o-P	C_{omax}	0	-	470	µF
	All w -P	C_{omax}	0	-	2,200	µF
Output Current	All w/o-P	I_o	0	-	1.3	A_{dc}
	All w -P	I_o	0	-	1.25	A_{dc}
Output Current Limit Inception (Hiccup Mode)	All	$I_{o,lim}$	1.4	1.8	-	A_{dc}
Output Short-Circuit Current (V_O ≤ 250 mV @ 25°C)	All	$I_{o,s/c}$	-	-	0.8	A_{rms}
Efficiency (V_{IN}=24-48Vdc, T_A=25°C, I_O=$I_{O,\,max}$)	All	η	86.0	87.5	-	%
Switching Frequency (Fixed) (V_{IN}=24 to 48V_{dc} and I_O= $I_{O,\,max}$)	All	f_{sw}	-	350	-	kHz
Dynamic Load Response						
($\Delta I_O/\Delta t$=0.1A/µs, V_{IN}=24 to 48Vdc, T_A=25°C)						
Load Change from I_O= 50% to 75% or 25% to 50% of $I_{O,max}$:						
Peak Deviation	All	V_{pk}	-	3.0	-	%$V_{o,set}$
Settling Time (V_o<10% peak deviation)	All	t_s	-	800	-	µs

Isolation Specifications

Parameter	Symbol	Min	Typ	Max	Unit
Isolation Capacitance	C_{iso}	-	1000	-	pF
Isolation Resistance	R_{iso}	10	-	-	MΩ
I/O Isolation Voltage	All	-	-	2250	Vdc

General Specifications

Parameter		Min	Typ	Max	Unit
Calculated Reliability based upon Telcordia SR-332 Issue 2: Method I Case 3 (V_{IN}=48V_{dc}, I_O=80%xI_{omax}, T_A=40°C, airflow = 200 LFM, 90% confidence)	FIT		127.1		10^9/Hours
	MTBF		7,866,035		Hours
Weight		-	8.0 (0.28)	-	g (oz.)

© 2023 OmniOn Power Inc. All rights reserved.

Feature Specifications

Unless otherwise indicated, specifications apply over all operating input voltage, resistive load, and temperature conditions. See Feature Descriptions for additional information.

Parameter	Device	Symbol	Min	Typ	Max	Unit
Remote On/Off Signal Interface (V_{IN}=$V_{IN,\ min}$ to $V_{IN,\ max}$; open collector or equivalent, Signal referenced to VIN- terminal) Negative Logic: device code suffix "1" Logic Low = module On, Logic High = module Off Positive Logic: No device code suffix required Logic Low = module Off, Logic High = module On						
Logic Low - Remote On/Off Current ($V_{on/off}$= -0.7V_{dc})	All	$I_{on/off}$	-	-	0.15	mA
Logic Low - On/Off Voltage	All	$V_{on/off}$	-0.7	-	0.8	V_{dc}
Logic High Voltage ($I_{on/off}$ = 0A_{dc})	All	$V_{on/off}$	2.0	-	18	V_{dc}
Logic High maximum allowable leakage current	All	$I_{on/off}$	-	-	25	µA
Turn-On Delay and Rise Times (I_O=80% of $I_{O,\ max}$, T_A=25°C)						
Case 1: Input power is applied for at least 1second, and then the On/Off input is set from OFF to ON (T_{delay} = on/off pin transition until V_O = 10% of $V_{O,\ set}$)	All	$T_{delay\ case1}$	-	20	25	ms
Case 2: On/Off input is set to Module ON, and then input power isapplied (T_{delay} = V_{IN} reaches VIN, min until V_O = 10% of $V_{O,\ set}$)	All	$T_{delay\ case2}$	-	20	25	ms
Output voltage Rise time (time for Vo to rise from 10% of $V_{o,set}$ to 90% of $V_{o,set}$)	All w/o-p	T_{rise}	-	10	20	Ms
Output voltage Rise time (time for Vo to rise from 10% of $V_{o,set}$ to 90% of $V_{o,set}$)	All w/o-p	T_{rise}	-	25	30	ms
Output Voltage Overshoot (I_O=80% of $I_{O,\ max}$, V_{IN}= 48V_{dc}, T_A=25°C)					3	%$V_{o,set}$
Output Overvoltage Protection	All	$V_{o,limt}$	13.6		16.8	Vdc
Input Undervoltage Lockout						
Turn-on Threshold	All	$V_{uv/on}$	-	17	18	V_{dc}
Turn-off Threshold	All	$V_{uv/off}$	14	15	-	V_{dc}
Hysterisis	All	V_{hyst}	-	2.0	-	V_{dc}

FOOTNOTES

* Trademark of OmniOn Company

UL is a registered trademark of Underwriters Laboratories, Inc.

† CSA is a registered trademark of Canadian Standards Association.

‡ VDE is a trademark of Verband Deutscher Elektrotechniker e.V.

§ This product is intended for integration into end-user equipment . All of the required procedures of end-use equipment should be followed.

¤ IEEE and 802 are registered trademarks of the Institute of Electrical and Electronics Engineers, Incorporated.

** ISO is a registered trademark of the International Organization of Standards

© 2023 OmniOn Power Inc. All rights reserved.

Characteristic Curves

The following figures provide typical characteristics for the SHHD001A3 (12.0V, 1.3A) at 25°C. The figures are identical for either positive or negative remote On/Off logic.

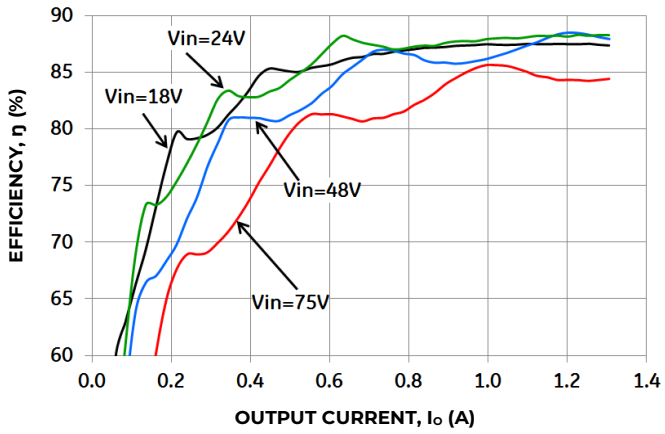

Figure 1. Converter Efficiency versus Output Current.

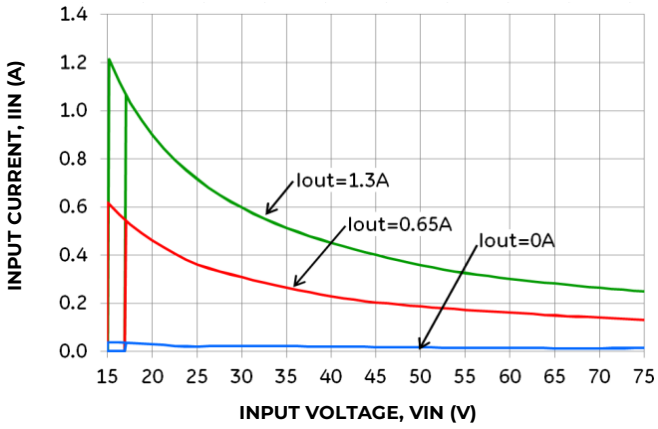

Figure 2. Converter Input Current versus Input Voltage.

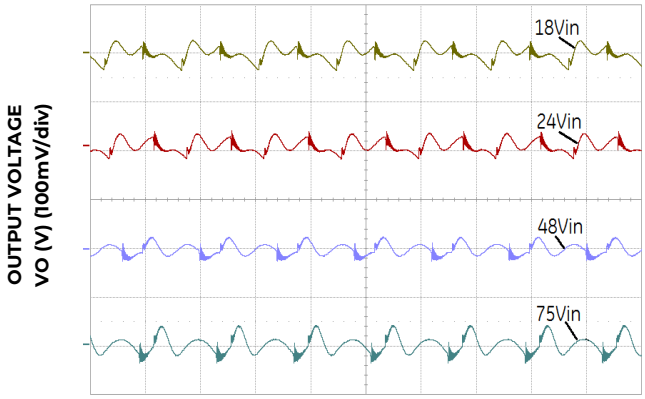

Figure 3. Typical output ripple and noise (Vo+, Io = Io, max).

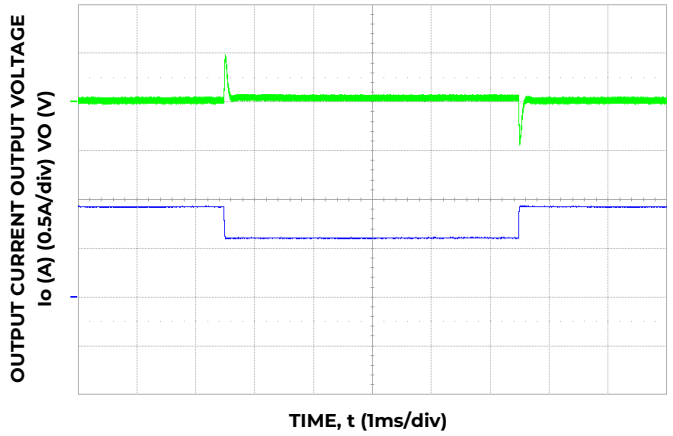

Figure 4. Transient Response to 0.1A/µS Dynamic Load Change from 50% to 75% to 50% of full load, Vin=24V.

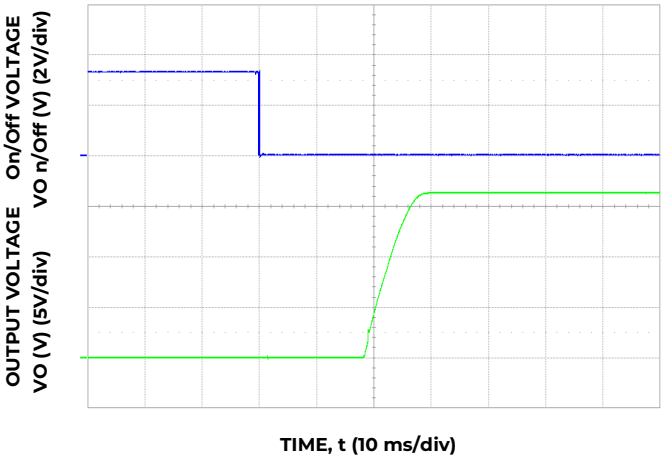

Figure 5.Typical Start-up Using Remote On/Off, negative logic, w/o-P version shown (VIN = 24V or 48V, Io = Io, max).

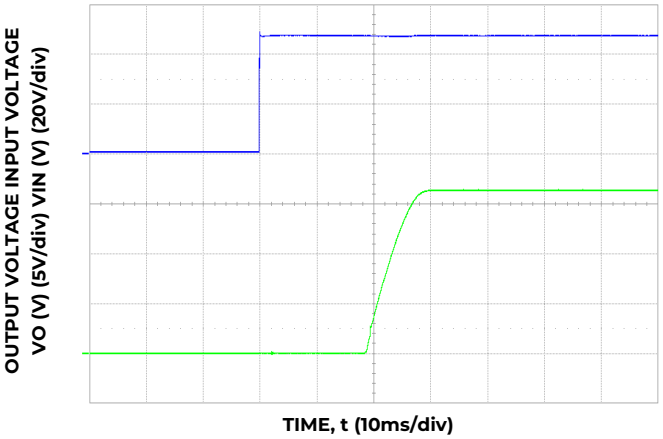

Figure 6. Typical Start-up w/o-P version Using Input Voltage (VIN = 48V, Io = Io, max).

© 2023 OmniOn Power Inc. All rights reserved.

Test Configurations

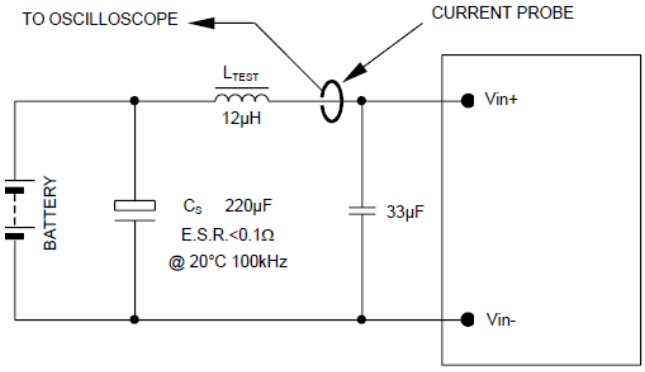

Figure 7. Input Reflected Ripple Current Test Setup.

NOTE: Measure input reflected ripple current with a simulated source inductance (L_{TEST}) of 12µH. Capacitor C_S offsets possible battery impedance. Measure current as shown above.

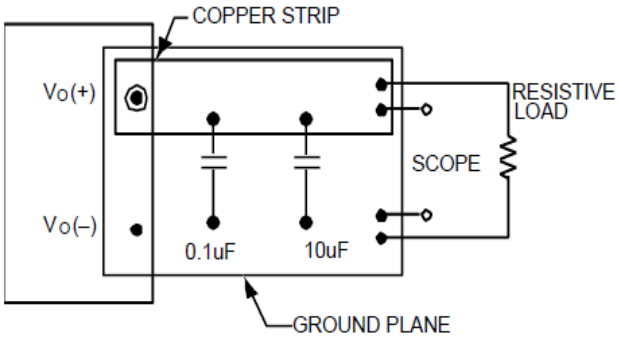

Figure 8. Output Ripple and Noise Test Setup.

NOTE: All voltage measurements to be taken at the module terminals, as shown above. If sockets are used then Kelvin connections are required at the module terminals to avoid measurement errors due to socket contact resistance.

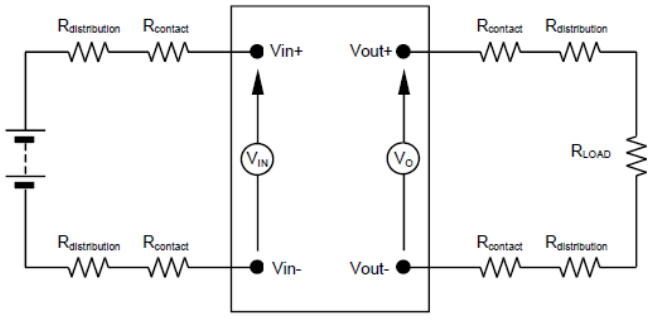

Figure 9. Output Voltage and Efficiency Test Setup.

NOTE: All voltage measurements to be taken at the module terminals, as shown above. If sockets are used then Kelvin connections are required at the module terminals to avoid measurement errors due to socket contact resistance.

$$\text{Efficiency} \quad \eta = \frac{V_O . I_O}{V_{IN} . I_{IN}} \times 100 \ \%$$

Design Considerations

Input Source Impedance

The power module should be connected to a low ac-impedance source. Highly inductive source impedance can affect the stability of the power module. For the test configuration in Figure 7, a 33µF electrolytic capacitor (ESR<0.7Ω at 100kHz), mounted close to the power module helps ensure the stability of the unit. Consult the factory for further application guidelines.

Safety Considerations

For safety agency approval the power module must be installed in compliance with the spacing and separation requirements of the end-use safety agency standards, i.e., UL ANSI/UL* 62368-1 and CAN/CSA+ C22.2 No. 62368-1 Recognized, DIN VDE 0868- 1/ A11:2017 (EN62368-1:2014/A11:2017)

If the input source is non-SELV (ELV or a hazardous voltage greater than 60 Vdc and less than or equal to 75Vdc), for the module's output to be considered as meeting the requirements for safety extra-low voltage (SELV) or ES1, all of the following must be true:

- The input source is to be provided with reinforced insulation from any other hazardous voltages, including the ac mains.
- One VIN pin and one VOUT pin are to be grounded, or both the input and output pins are to be kept floating.
- The input pins of the module are not operator accessible.
- Another SELV or ES1 reliability test is conducted on the whole system (combination of supply source and subject module), as required by the safety agencies, to verify that under a single fault, hazardous voltages do not appear at the module's output.

© 2023 OmniOn Power Inc. All rights reserved.

Note: Do not ground either of the input pins of the module without grounding one of the output pins. This may allow a non-SELV/ES1 voltage to appear between the output pins and ground.

The power module has safety extra-low voltage (SELV) or ES1outputs when all inputs are SELV or ES1.

For input voltages exceeding –60 Vdc but less than or equal to – 75 Vdc, these converters have been evaluated to the applicable requirements of BASIC INSULATION between secondary DC

MAINS DISTRIBUTION input (classified as TNV-2 in Europe) and unearthed SELV outputs.

The input to these units is to be provided with a maximum 3A time-delay fuse in the ungrounded lead.

Feature Descriptions

Remote On/Off

Two remote on/off options are available. Positive logic turns the module on during a logic high voltage on the ON/OFF pin, and off during a logic low. Negative logic remote On/Off, device code suffix "1", turns the module off during a logic high and on during a logic low.

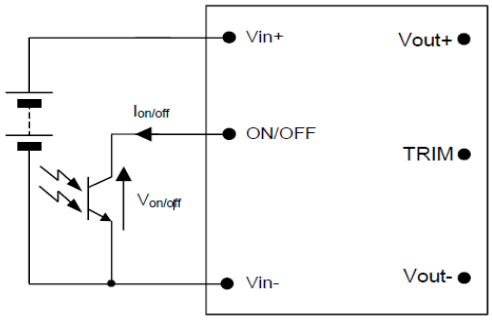

Figure 10 Circuit configuration for using Remote On/Off Implementation.

To turn the power module on and off, the user must

supply a switch (open collector or equivalent) to control the voltage ($V_{on/off}$) between the ON/OFF terminal and the VIN(-) terminal Logic low is $0V \le V_{on/off} \le 0.8V$. The maximum Ion/off during a logic low is 1mA; the switch should be maintaining a logic low level while sinking this current.

During a logic high, the typical maximum Von/off generated by the module is 2.4V, and the maximum allowable leakage current at Von/off = 2.4V is 25µA.

If not using the remote on/off feature:

For positive logic, leave the ON/OFF pin open.

For negative logic, short the ON/OFF pin to VIN(-).

Overcurrent Protection

To provide protection in a fault (output overload) condition, the unit is equipped with internal current-limiting circuitry and can endure current limiting continuously. At the point of current-limit inception, the unit shall enter hiccup mode. The unit shall operate normally once the output current is brought back into its specified range. The average output current during hiccup is 10% I_O, max.

Overtemperature Protection

To provide protection under certain fault conditions, the unit is equipped with a thermal shutdown circuit. The unit shall shutdown if the thermal reference point Tref (Figure 17), exceeds 125°C. The module shall automatically restart upon cool-down to a safe temperature.

Input Undervoltage Lockout

At input voltages below the input undervoltage lockout limit, the module operation is disabled. The module will only begin to operate once the input voltage is raised above the undervoltage lockout turn-on threshold, $V_{UV/ON}$. Once operating, the module continues to operate until the input voltage is taken below the undervoltage turn-off threshold, $V_{UV/off}$.

Over Voltage Protection

The output overvoltage protection consists of circuitry that independently monitors the output voltage, and shuts the module down if the output voltage exceeds specified limits. The module contains hiccup restart capability.

$$R_{adj-down} = \left[\frac{(V_{o,adj} - 2.5) \times 10000}{(V_{o,nom} - V_{o,adj})} - 5100 \right] \Omega$$

Output Voltage Programming

Trimming allows the user to increase or decrease the output voltage set point of the module. This is accomplished by connecting an external resistor between the TRIM pin and either the Vout+ pin or the Vout - pin

Trim Down – Decrease Output Voltage

By connecting an external resistor between the TRIM pin and Vout+ pin (Radj-down), the output voltage set point decreases (see figure 11). The following equation determines the external resistor value to obtain an output voltage change from Vo, nom to the desired $V_{o,adj}$:

© 2023 OmniOn Power Inc. All rights reserved.

Trim Up – Increase Output Voltage

By connecting an external resistor between the TRIM pin and Vout- pin (Radj-up), the output voltage set point increases (see figure 12). The following equation determines the external resistor value to obtain an output voltage change from Vo, nom to the desired: $V_{o,\,adj}$:

$$R_{adj-up} = \left[\frac{25{,}000}{(V_{o,\,adj} - 12)} - 5110\right]\Omega$$

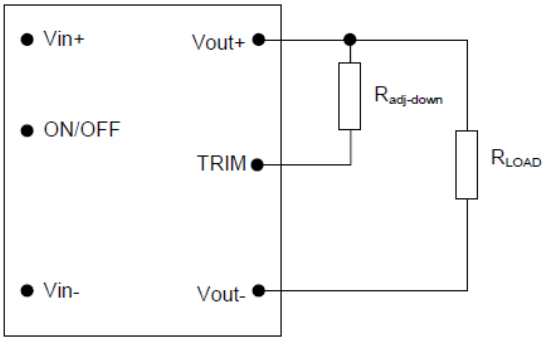

Figure 11. Circuit Configuration to Decrease Output Voltage.

The combination of the output voltage adjustment and the output voltage initial tolerance must not exceed the allowable trim range of 90% to 110% of the nominal output voltage as measured between the Vout+ and Vout- pins.

The SHHD power modules have a fixed current-limit set point.

Therefore, as the output voltage is adjusted down, the available output power is reduced.

Trim Examples

For SHHD005A0, nominal 12.0V module. To trim module down to 11.5V:

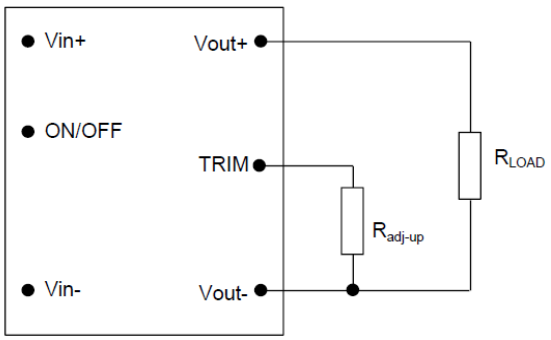

Figure 12. Circuit Configuration to Increase Output Voltage.

$$R_{adj-down} = \left[\frac{(11.5-2.5)\times 10000}{(12.0-11.5)} - 5110\right]\Omega$$

$$R_{adj-down} = 174{,}890\ \Omega$$

Load Share –P Versions

Modules with "P" in the product code are configured with active droop load sharing capability. Best load current sharing balance is achieved when the output traces from each module have the same external Vout+ and Vout- resistance (length x width) to the location where the traces merge. The module incorporates diode rectification which insures no reverse current during parallel startup if one module is ahead of others during turn-on. Up to 4 modules may be paralleled for increased load power. Maintain

same temperature for all modules to insure best load share balance.

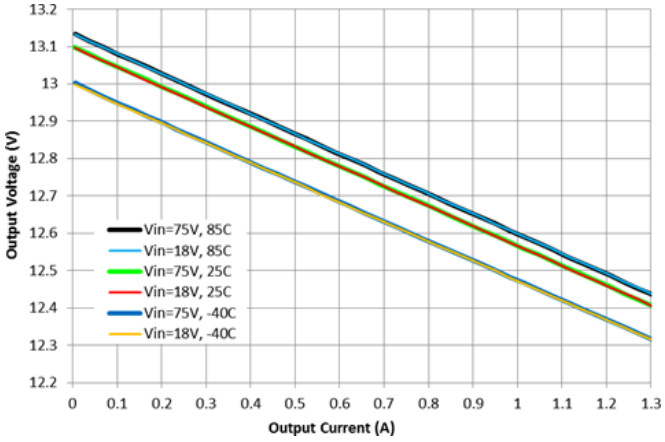

Figure 13 Output Current Active Droop, -P Option.

Thermal Considerations

The power modules operate in a variety of thermal

environments; however, sufficient cooling should be provided to help ensure reliable operation.

Considerations include ambient temperature, airflow, module power dissipation, and the need for increased reliability. A reduction in the operating temperature of the module will result in an increase in reliability. The thermal data has been gathered based on physical measurements taken in a wind tunnel, using automated thermocouple instrumentation to monitor key component temperatures: FETs, diodes, control ICs, magnetic cores, ceramic capacitors, opto-isolators, and module pwb conductors, while controlling the ambient airflow rate and temperature.

© 2023 OmniOn Power Inc. All rights reserved.

For a given airflow and ambient temperature, the module output power is increased, until one (or more) of the components reaches its maximum derated operating temperature, as defined in IPC-9592A. This procedure is then repeated for a different airflow or ambient temperature until a family of module output derating curves is obtained.

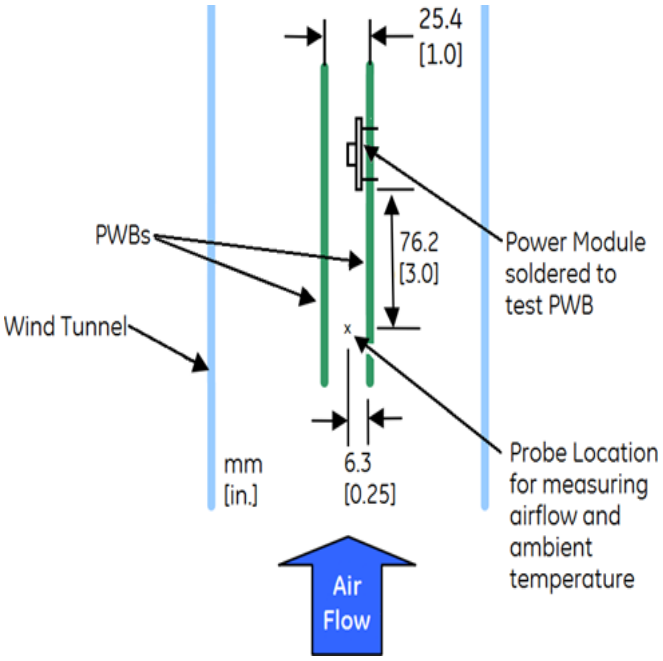

Figure 14. Thermal Test Setup .

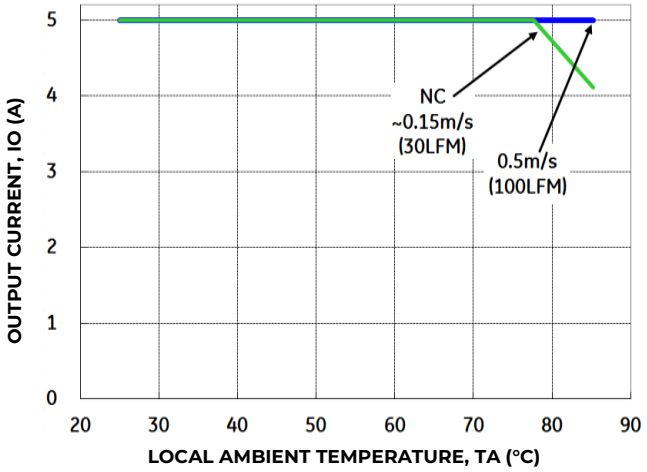

Figure 15. Output Current Derating for the Open Frame SHHD005A0F in the Transverse Orientation; Airflow Direction from Vin(-) to Vin(+); Vin = 24V.

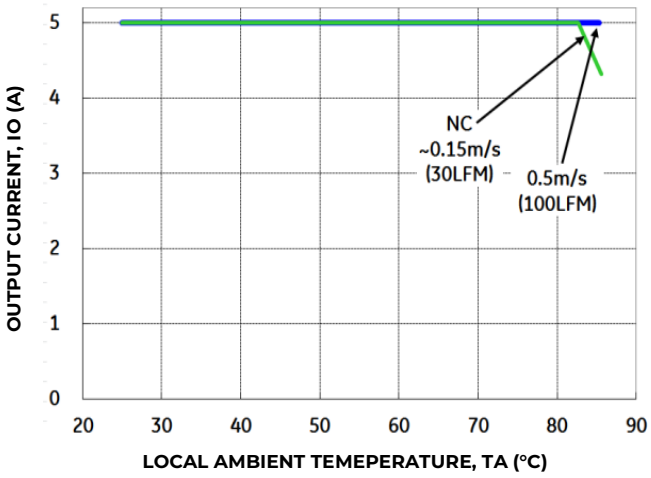

Figure 16. Output Current Derating for the Open Frame SHHD005A0F in the Transverse Orientation; Airflow Direction from Vin(-) to Vin(+); Vin = 48V.

The thermal reference point, Tref used in the specifications is shown in Figure 17. For reliable operation this temperature should not exceed 112°C.

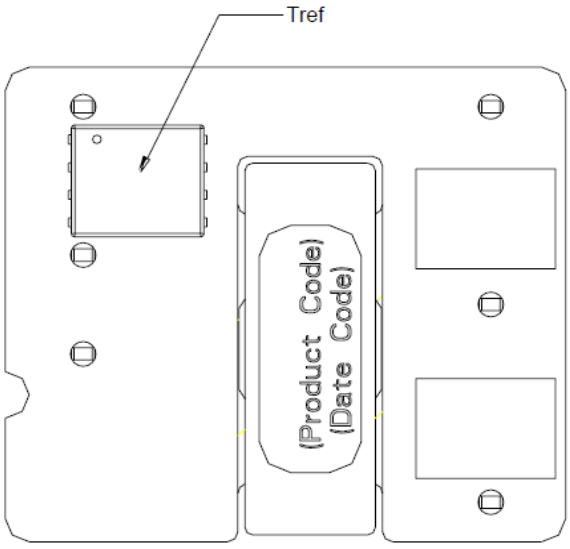

Figure 17. Tref Temperature Measurement Location.

© 2023 OmniOn Power Inc. All rights reserved.

Heat Transfer via Convection

Increased airflow over the module enhances the heat transfer via convection. Derating curves showing the maximum output current that can be delivered by each module versus local ambient temperature (TA) for natural convection and up to 3m/s (600 ft./min) are shown in the respective Characteristics Curves section.

Please refer to the Application Note “Thermal Characterization Process For Open-Frame Board-Mounted Power Modules” for a detailed discussion of thermal aspects including maximum device temperatures.

EMC Requirements

Figure 19. shows a maximum filter configuration to meet the conducted emission limits of EN55032 Class B.

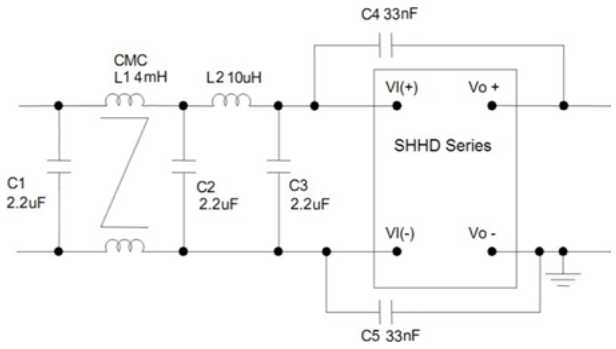

Ref Des	Filter
C1 , C2, C3	2.2µF/100V
C4, C5	33nF Y Cap
L1	4mH CM choke
L2	10µH inductor

Figure 18 Suggested Configuration for EN55032 Class

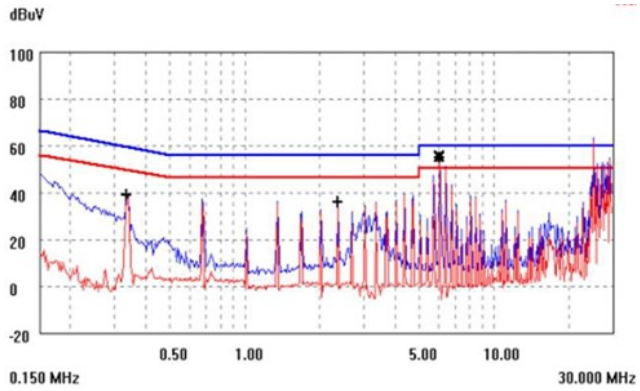

Figure 19. EMC signature using above filter, SHHDA

For further information on designing for EMC compliance, please refer to the FLTR100V10 data sheet (FDS01-043EPS).

Layout Considerations

The SHHD power module series are low profile in order to be used in fine pitch system card architectures. As such, component clearance between the bottom of the power module and the mounting board is limited. Avoid placing copper areas on the outer layer directly underneath the power module. Also avoid placing via interconnects underneath the power module.

For additional layout guide-lines, refer to the FLTR100V10 data sheet.

The SHHD family of power modules is available for either Through-Hole (TH) or Surface Mount (SMT) soldering.

Through-Hole Soldering Information

The RoHS-compliant (Z codes) through-hole products use the SAC (Sn/Ag/Cu) Pb-free solder and RoHS-compliant components. They are designed to be processed through single or dual wave soldering machines. The pins have an RoHS-compliant finish that is compatible with both Pb and Pb-free wave soldering processes. A maximum preheat rate of 3°C/s is suggested. The wave preheat process should be such that the temperature of the power module board is kept below 210°C. For Pb solder, the recommended pot temperature is 260°C, while the Pb-free solder pot is 270°C max. The Through Hole module is also compatible with paste-in-hole reflow soldering. Refer to the Reflow Soldering Information section for process details. If additional information is needed, please consult with your OmniOn representative for more details.

© 2023 OmniOn Power Inc. All rights reserved.

Surface Mount Information

Pick and Place

The SHHD-SR series of DC-to-DC power converters use an open-frame construction and are designed for surface mount assembly within a fully automated manufacturing process.

The SHHD-SR series modules are designed to use the main magnetic component surface to allow for pick and place.

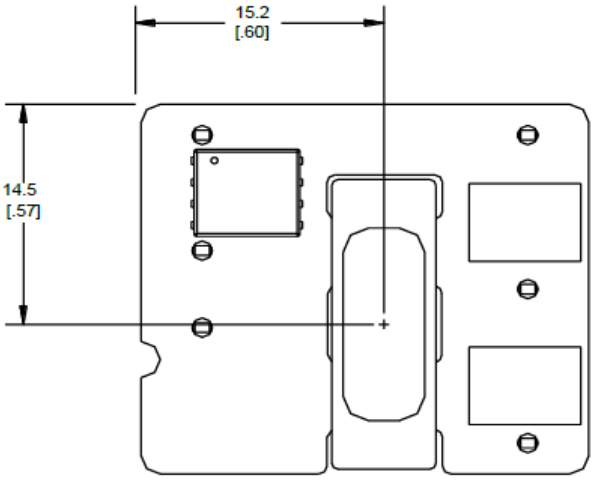

Figure 20. Pick and Place Location.

Note: All dimensions in mm [in].

Z Plane Height

The 'Z' plane height of the pick and place location is 7.50mm nominal with an RSS tolerance of +/-0.25 mm.

Nozzle Recommendations

The module weight has been kept to a minimum by using open frame construction. Even so, they have a relatively large mass when compared with conventional SMT components. Variables such as nozzle size, tip style, vacuum pressure and placement speed should be considered to optimize this process.

The minimum recommended nozzle diameter for reliable operation is 5mm. The maximum nozzle outer diameter, which will safely fit within the allowable component spacing, is 6.5mm.
Oblong or oval nozzles up to 11 x 6 mm may also be used within the space available.

For further information please contact your local OmniOn Technical Sales Representative.

Reflow Soldering Information

These power modules are large mass, low thermal resistance devices and typically heat up slower than other SMT components. It is recommended that the customer review data sheets in order to customize the solder reflow profile for each application board assembly.

The following instructions must be observed when SMT soldering these units. Failure to observe these instruction may result in the failure of or cause damage to the modules, and can adversely affect long -term reliability.

There are several types of SMT reflow technologies currently used in the industry. These surface mount power modules can be reliably soldered using natural forced convection, IR (radiant infrared), or a combination of convection/IR. The recommended linear reflow profile using Sn/Pb solder is shown in Figure 21 and 22. For reliable soldering the solder reflow profile should be established by accurately measuring the module's CP connector temperatures.

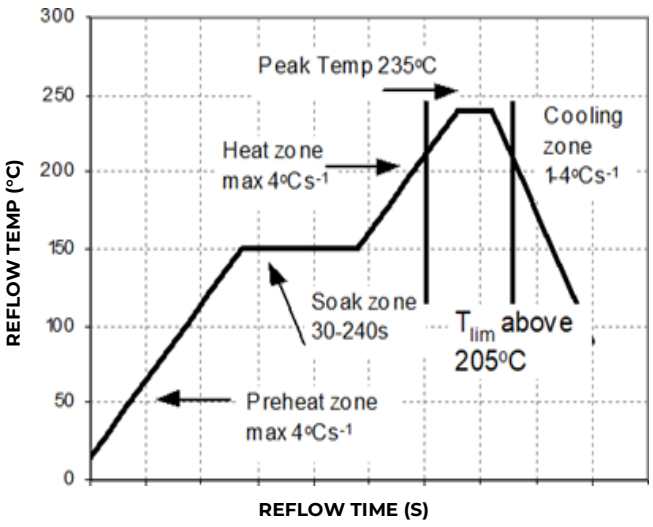

Figure 21. Recommended Reflow Profile for Sn/Pb solder.

© 2023 OmniOn Power Inc. All rights reserved.

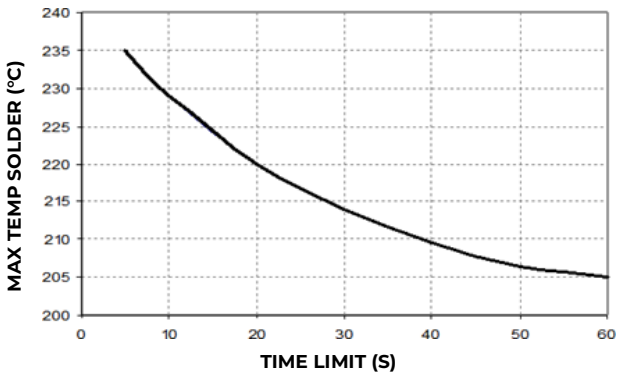

Figure 22. Time Limit, T_{lim}, Curve Above 205 °C Reflow .

Lead Free Soldering

The –Z version SMT modules of the SHHD series are lead-free (Pb-free) and RoHS compliant and are compatible in a Pb-free soldering process. Failure to observe the instructions below may result in the failure of or cause damage to the modules and can adversely affect long-term reliability.

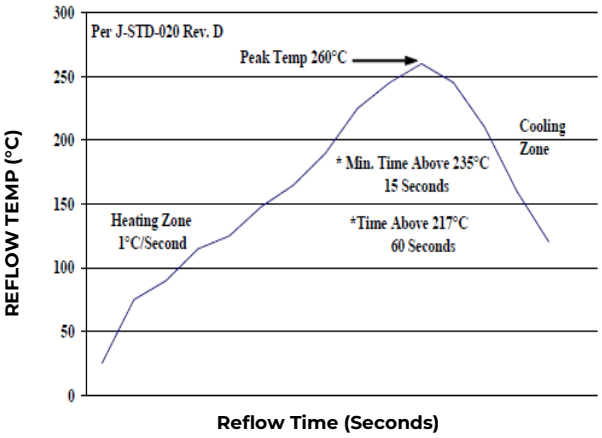

Figure 23. Recommended linear reflow profile using Sn/Ag/Cu solder.

MSL Rating

The SHHD001A3B series SMT modules have a MSL rating as indicated int eh Device Code table on the last page.

Pb-free Reflow Profile

Power Systems will comply with J-STD-020 Rev. C (Moisture/Reflow Sensitivity Classification for Nonhermetic Solid State Surface Mount Devices) for both Pb-free solder profiles and MSL classification procedures. This standard provides a recommended forced-air-convection reflow profile based on the volume and thickness of the package (table 4-2). The suggested Pb-free solder paste is Sn/Ag/Cu (SAC). The recommended linear reflow profile using Sn/Ag/Cu solder is shown in Figure 23.

Post Solder Cleaning and Drying Considerations

Post solder cleaning is usually the final circuit board assembly process prior to electrical board testing. The result of inadequate cleaning and drying can affect both the reliability of a power module and the testability of the finished circuit board assembly. For guidance on appropriate soldering, cleaning and drying procedures, refer to OmniOn Power Board Mounted Power Modules: Soldering and Cleaning Application Note (AN04-001).

© 2023 OmniOn Power Inc. All rights reserved.

Layout Recommendations

Dimensions are in millimeters and [inches].

Tolerances: x.x mm ± 0.5 mm [x.xx in. ± 0.02 in.] (unless otherwise indicated)

x.xx mm ± 0.25 mm [x.xxx in ± 0.010 in.]

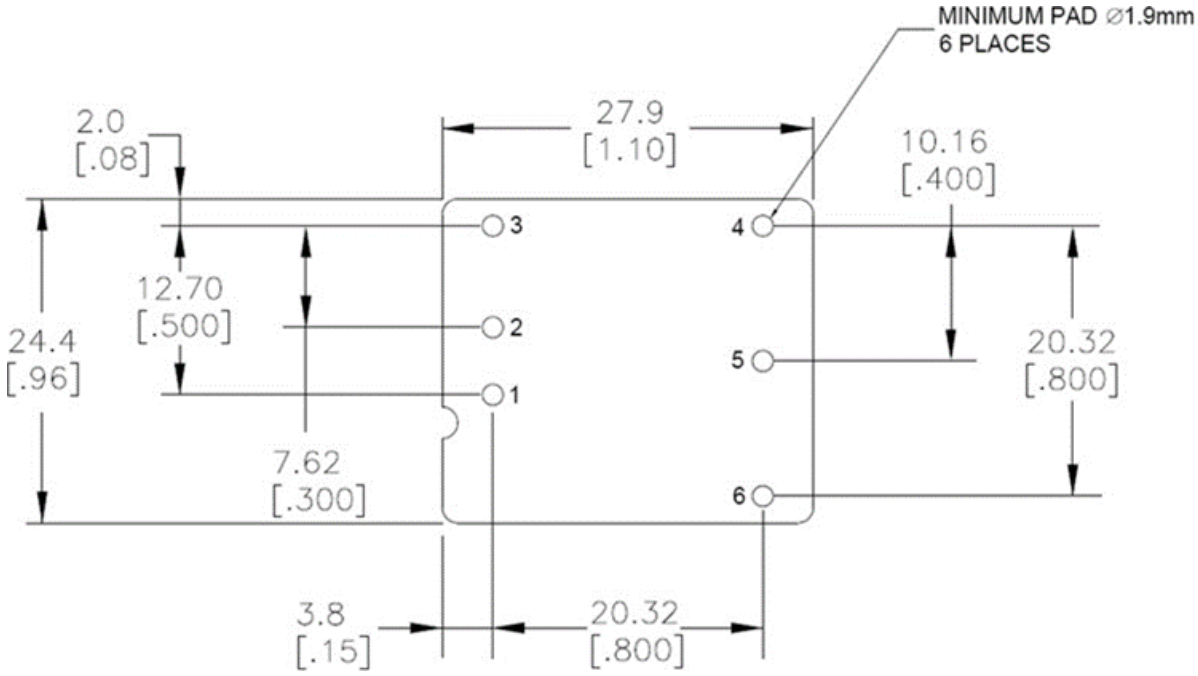

SMT Layout

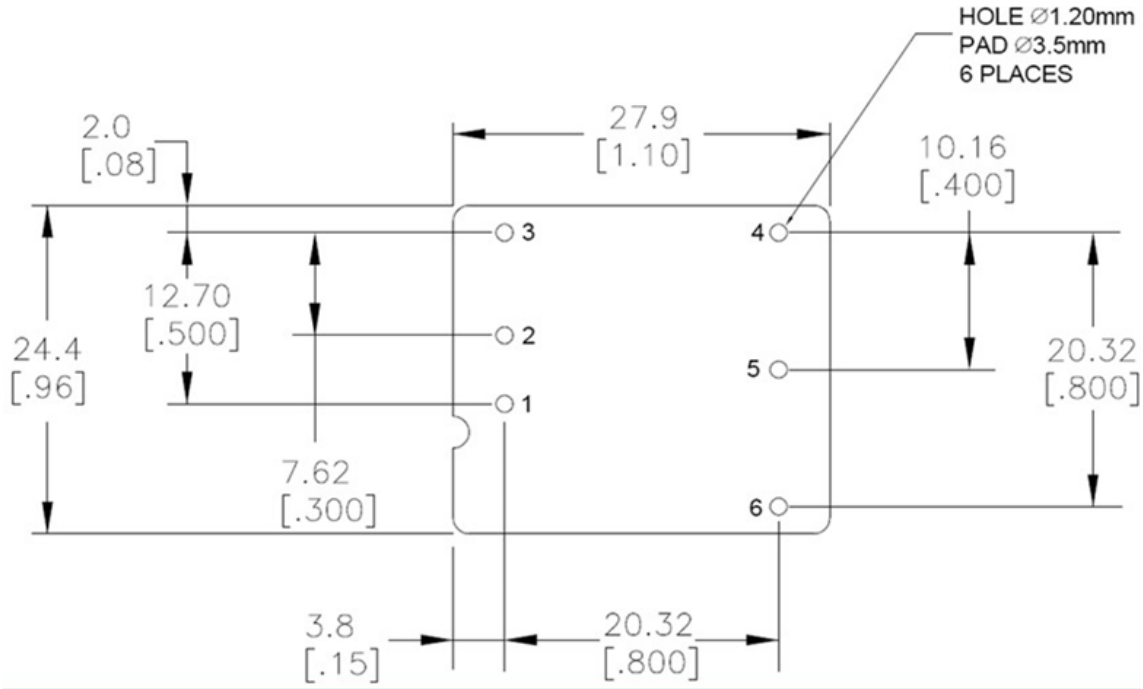

Through Hole Layout

© 2023 OmniOn Power Inc. All rights reserved.

Packaging Details

The SHHD001A3B-SR series SMT versions are supplied in tape & reel as standard. Details of tape dimensions are shown below. Modules are shipped in quantities of 150 modules per reel.

Tape Dimensions

Dimensions are in millimeters and [inches].
Tolerances: x.x mm ± 0.5 mm [x.xx in. ± 0.02 in.] (unless otherwise indicated)
x.xx mm ± 0.25 mm [x.xxx in ± 0.010 in.]

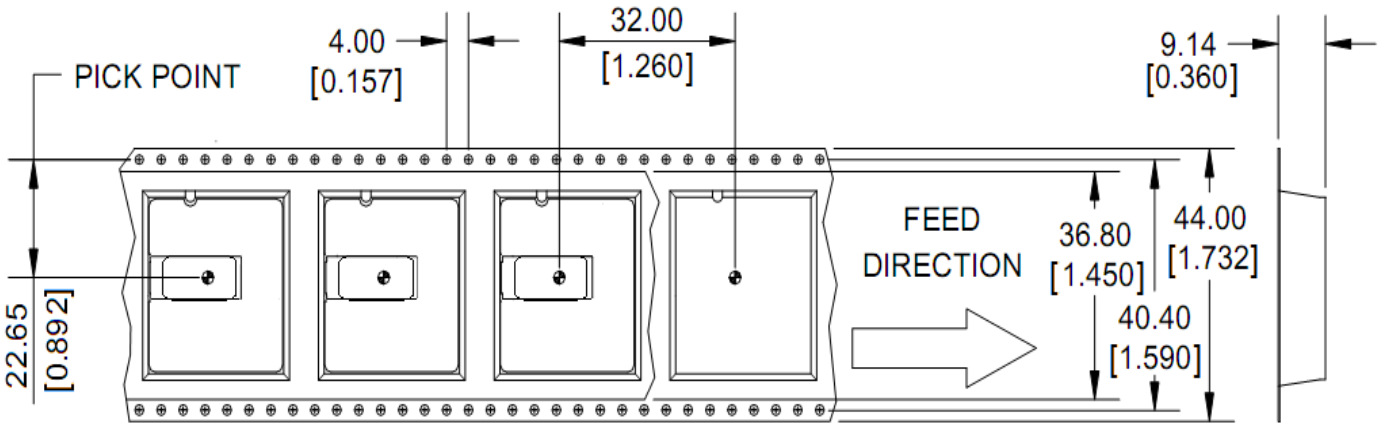

Reel Dimensions

Outside Diameter: 330.2 mm [13.00”]
Inside Diameter: 177.8 mm [7.00”]
Tape Width: 44.00 [1.732]

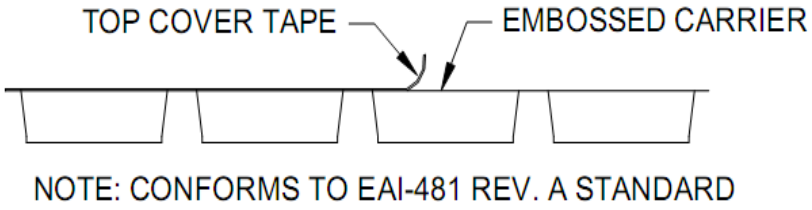

NOTE: CONFORMS TO EAI-481 REV. A STANDARD

The SHHD001A3B series Through Hole versions are supplied in trays as standard. Details of tray dimensions are shown below. Modules are shipped in quantities of 75 modules per box.

© 2023 OmniOn Power Inc. All rights reserved.

Tray Dimensions

Dimensions are in millimeters.

Tolerances: x.x mm ± 0.5 mm (unless otherwise indicated)
x.xx mm ±0.25 mm



Material	PET (1mm)
Max surface resistivity	10^{9} -10^{11}Ω/PET
Color	Clear
Capacity	25 power modules
Min order quantity	75pcs (1 box of3 full trays + 1 empty top tray)

© 2023 OmniOn Power Inc. All rights reserved.

Mechanical Outline for SHHD001A3B Surface-Mount Module

Dimensions are in millimeters and [inches].
Tolerances: x.x mm ± 0.5 mm [x.xx in. ± 0.02 in.] (unless otherwise indicated)
x.xx mm ± 0.25 mm [x.xxx in ± 0.010 in.]

Top View

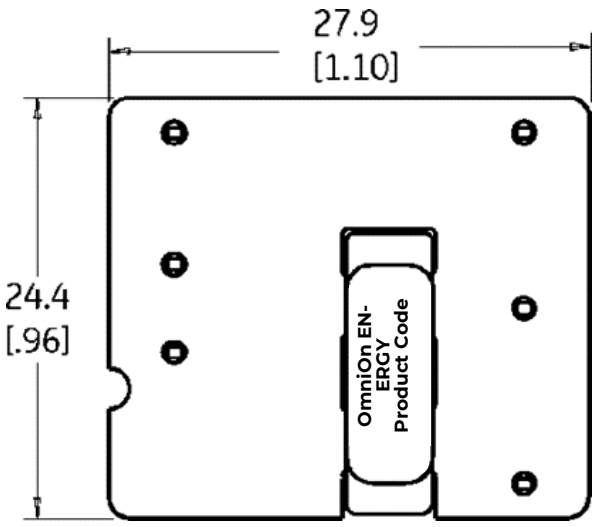

Side View

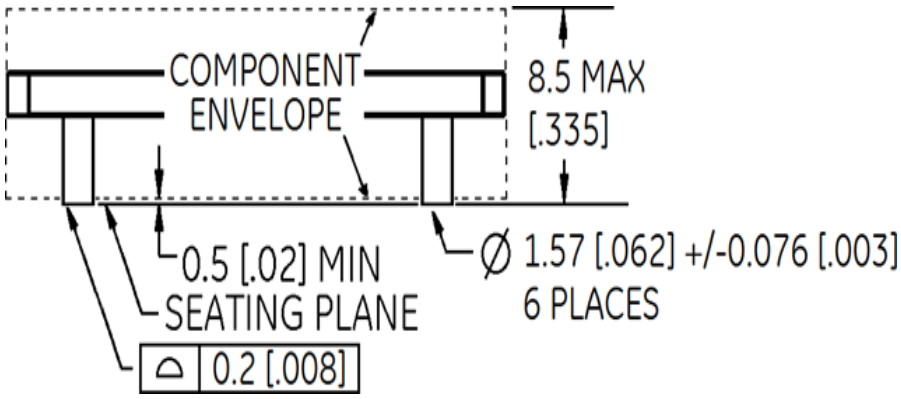

Bottom View

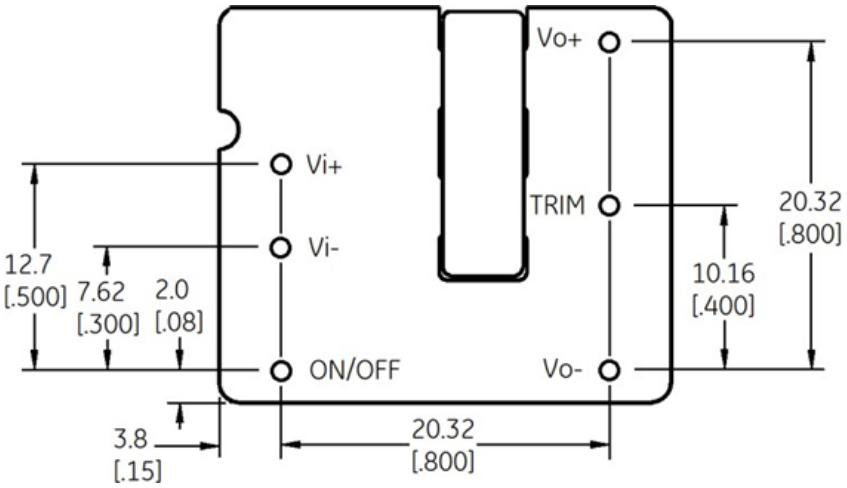

PIN	FUNCTION
1	VIN(+)
2	VIN(-)
3	On/Off
4	V out(-)
5*	TRIM*
6	V out (+)

* Depopulated when - P option included.

© 2023 OmniOn Power Inc. All rights reserved.

Mechanical Outline for SHHD001A3B Through Hole Module

Dimensions are in millimeters and [inches].
Tolerances: x.x mm ± 0.5 mm [x.xx in. ± 0.02 in.] (unless otherwise indicated)
x.xx mm ± 0.25 mm [x.xxx in ± 0.010 in.]

Top View

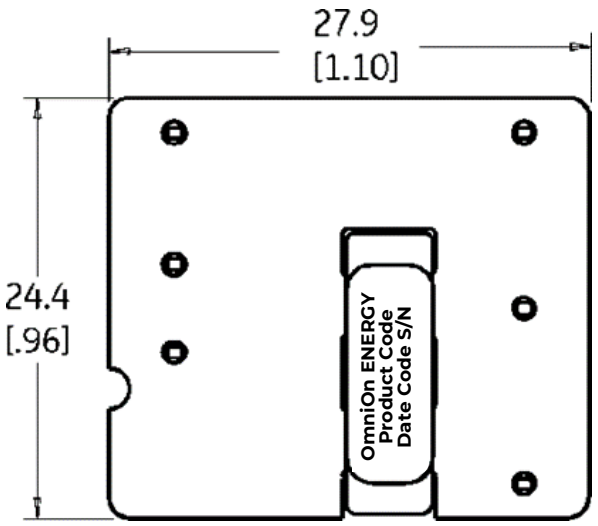

Side View

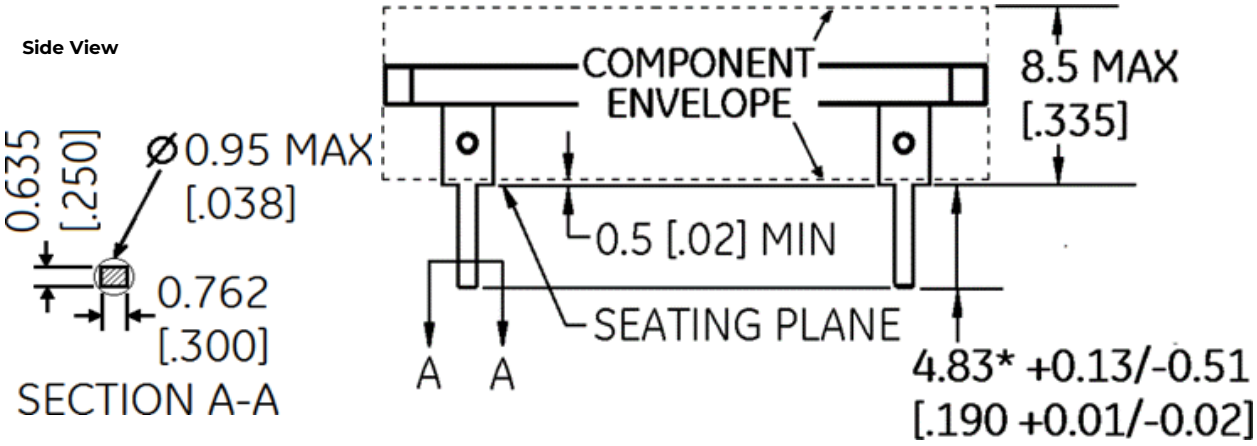

Bottom View

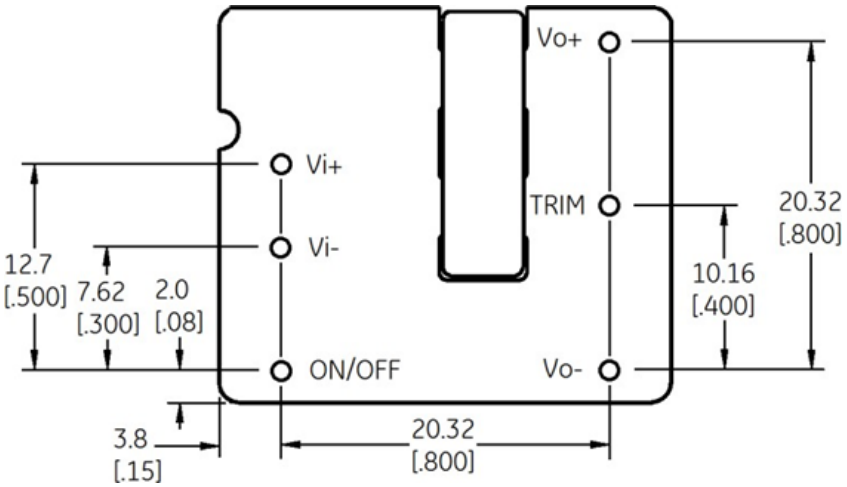

PIN	FUNCTION
1	VIN(+)
2	VIN(-)
3	On/Off
4	V out(-)
5*	TRIM*
6	V out (+)

* Depopulated when - P option included.

© 2023 OmniOn Power Inc. All rights reserved.

Ordering Information

Please contact your OmniOn Sales Representative for pricing, availability and optional features.

Device Code	Input Voltage Range	Output Current	Output Voltage	Remote On/Off Logic	Connector Type	MSL Rating	Ordering Code
SHHD001A3B4Z	24V/48V (18-75Vdc)	1.3A	12.0V	Positive	Through hole	2a	150024947
SHHD001A3B41Z	24V/48V (18-75Vdc)	1.3A	12.0V	Negative	Through hole	2a	CC109172937
SHHD001A3B41-SRZ	24V/48V (18-75Vdc)	1.3A	12.0V	Negative	Surface	2a	150023383
SHHS001A3B641-46Z	24V/48V (18-85Vdc)	1.3A	12.0V	Negative	Through hole	2a	150027750

Table 1. Device Code

	Characteristic	Character and Position											Definition
Ratings	Form Factor	S											**S** = 1 x 1 Brick
	Family Designator		HH										HH = Hammerhead* Series
	Input Voltage			D									D = Uitra Wide Range, 18V-75V
	Output Current				001A3								001A3 = 001.3 Amps Maximum Output Current
	Output Voltage				B								F = 12.0V nominal
Options	Pin Length						6 8						Omit = Default Pin Length shown in Mechanical Outline Figures 6 = Pin Length: 3.68 mm ± 0.25mm , (0.145 in. ± 0.010 in.) 8 = Pin Length: 2.79 mm ± 0.25mm , (0.110 in. ± 0.010 in.)
	Action following Protective Shutdown							4					4 = Auto-restart following shutdown (Over current/ Over voltage) Must be ordered
	On/Off Logic								1				Omit = Positive Logic 1 = Negative Logic
										-			
	Customer Specific									XY			XY= Customer Specific Modified Code, Omit for Standard Code
	Load share										P		P = Active Forced Droop Output for use in parallel applications
	Mechanical Features										S R		Omit = Standard open Frame Module S = Surface Mount connections: R = Tape & Reel Packaging
	RoHS											Z	Omit = RoHS 5/6, Lead Based Solder Used Z = RoHS Compliant

Table 2. Device Options

© 2023 OmniOn Power Inc. All rights reserved.

Change History (excludes grammar & clarifications)

Revision	Date	Description of the change
1.8	03/29/2022	ROHS
1.9	12/18/2023	Updated as per OmniOn template

© 2023 OmniOn Power Inc. All rights reserved.

OmniOn Power Inc.
601 Shiloh Rd.
Plano, TX USA

omnionpower.com

We reserve the right to make technical changes or modify the contents of this document without prior notice. OmniOn Power does not accept any responsibility for errors or lack of information in this document and makes no warranty with respect to and assumes no liability as a result of any use of information in this document.

We reserve all rights in this document and in the subject matter and illustrations contained therein. Any reproduction, disclosure to third parties or utilization of its contents – in whole or in parts – is forbidden without prior written consent of OmniOn Power. This document does not convey license to any patent or any intellectual property right. Copyright© 2023 OmniOn Power Inc. All rights reserved.

© 2023 OmniOn Power Inc. All rights reserved.

Unikeyic Electronics

Global Electronic Components Distributor

Click to view pricing, inventory, delivery, and lifecycle information:

OMNION POWER:

EHW007A0B41Z KHHD004A2B41Z NQR010A0X4Z PKX014A0X43-SRZ EHHD015A0A41-HZ
EVW010A0B41Z KHHD010A0A41Z PVX003A0X3-SRZ MLX160A0XY3-SRZ PNVT006A0X3-SRZ
PNVX002A0X3-SRZ EHHD010A0B641-HZ APTS003A0X-SRZ AXB050X43-SRZ AXH005A0XZ
MLX120A0XY3-SRZ APXW003A0X3-SRDZ CP2500DC54-PEZ UDXS1212A0X3-SRZ
ABXS005A4X341-SRZ APTS006A0X-SRZ CP2725AC48TEZ-FB2 EBVW020A0B41-HZ EBVW020A0B41Z
EVAL_TJT120 QBDW033A0B41-HZ EHHD020A0F41Z EHHD024A0A41-HZ EQW020A0F1Z
EVAL APTS030A0X3-SRPHZ