N-Channel Enhancement Mode MOSFET

Feature

- 100V/180A
  $R_{DS(ON)}$=3.2mΩ(typ.) @ V_{GS} = 10V
- 100% Avalanche Tested
- Reliable and Rugged
- Lead-Free and Green Devices Available
  (RoHS Compliant)

Pin Description

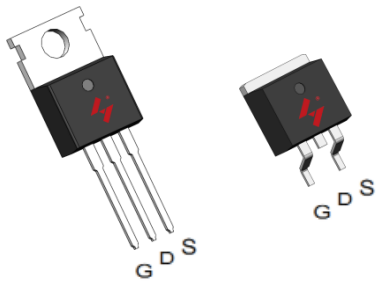

TO-220FB-3L TO-263-2L

Applications

- Power Switching application
- DC-DC Converters
- Motor control

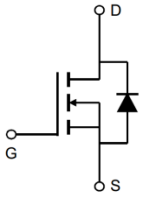

N-Channel MOSFET

Ordering and Marking Information

P G035N10 XYMXXXXXX B G035N10 XYMXXXXXX	Package Code P :TO-220FB-3L B:TO-263-2L Date Code XYMXXXXXX

Note: HUAYI lead-free products contain molding compounds/die attach materials and 100% matte tin plateTermi-Nation finish; which are fully compliant with RoHS. HUAYI lead-free products meet or exceed the lead-Free require-ments of IPC/JEDEC J-STD-020 for MSL classification at lead-free peak reflow temperature. HUAYI defines “Green” to mean lead-free (RoHS compliant) and halogen free (Br or Cl does not exceed 900ppm by weight in homogeneous material and total of Br and Cl does not exceed 1500ppm by weight).

HUAYI reserves the right to make changes, corrections, enhancements, modifications, and improvements to this pr-oduct and/or to this document at any time without notice.

Absolute Maximum Ratings

Symbol	Parameter		Rating	Unit
Common Ratings (Tc=25°C Unless Otherwise Noted)				
V_{DSS}	Drain-Source Voltage		100	V
V_{GSS}	Gate-Source Voltage		±20	V
T_J	Junction Temperature Range		-55 to 175	°C
T_{STG}	Storage Temperature Range		-55 to 175	°C
I_S	Source Current-Continuous(Body Diode)	Tc=25°C	180	A
Mounted on Large Heat Sink				
I_{DM}	Pulsed Drain Current *	Tc=25°C	490	A
I_D	Continuous Drain Current	Tc=25°C	180	A
		Tc=100°C	127	A
P_D	Maximum Power Dissipation	Tc=25°C	220	W
		Tc=100°C	110	W
$R_{\theta JC}$	Thermal Resistance, Junction-to-Case		0.68	°C/W
$R_{\theta JA}$	Thermal Resistance, Junction-to-Ambient **		62.5	°C/W
E_{AS}	Single Pulsed-Avalanche Energy ***	L=0.3mH	720	mJ

Note: * Repetitive rating; pulse width limited by max. junction temperature.
** Surface mounted on FR-4 board.
*** Limited by $T_J$max , starting T_J=25°C, L = 0.3mH, VDS=80V, VGS =10V.

Electrical Characteristics(Tc =25°C Unless Otherwise Noted)

Symbol	Parameter	Test Conditions	HYG035N10NS2			Unit
			Min	Typ.	Max	
Static Characteristics						
BV_{DSS}	Drain-Source Breakdown Voltage	V_{GS}=0V,I_{DS}=250μA	100	-	-	V
I_{DSS}	Drain-to-Source Leakage Current	V_{DS}=100V,V_{GS}=0V	-	-	1.0	μA
		T_J=125°C	-	-	50	μA
$V_{GS(th)}$	Gate Threshold Voltage	V_{DS}=V_{GS}, I_{DS}=250μA	2	3	4	V
I_{GSS}	Gate-Source Leakage Current	V_{GS}=±20V,V_{DS}=0V	-	-	±100	nA
$R_{DS(ON)}$*	Drain-Source On-State Resistance	V_{GS}=10V,I_{DS}=50A	-	3.2	4	mΩ
Diode Characteristics						
V_{SD}*	Diode Forward Voltage	I_{SD}=50A,V_{GS}=0V	-	0.88	1.3	V
t_{rr}	Reverse Recovery Time	I_{SD}=50A,dI_{SD}/dt=100A/μs	-	78	-	ns
Q_{rr}	Reverse Recovery Charge		-	192	-	nC

Electrical Characteristics (Cont.) (Tc =25°C Unless Otherwise Noted)

Symbol	Parameter	Test Conditions	HYG035N10NS2			Unit
			Min	Typ.	Max	
Dynamic Characteristics						
R_G	Gate Resistance	V_{GS}=0V,V_{DS}=0V,F=1MHz	-	2.1	-	Ω
C_{iss}	Input Capacitance	V_{GS}=0V, V_{DS}=50V, Frequency=500KHz	-	7270	-	pF
C_{oss}	Output Capacitance		-	2420	-	
C_{rss}	Reverse Transfer Capacitance		-	189	-	
$t_{d(ON)}$	Turn-on Delay Time	V_{DD}=50V,R_G=4Ω, I_{DS}=50A,V_{GS}=10V	-	28	-	ns
T_r	Turn-on Rise Time		-	99	-	
$t_{d(OFF)}$	Turn-off Delay Time		-	70	-	
T_f	Turn-off Fall Time		-	85	-	
Gate Charge Characteristics						
Q_g	Total Gate Charge	V_{DS}=80V, V_{GS}=10V, I_D=50A	-	115	-	nC
Q_{gs}	Gate-Source Charge		-	41	-	
Q_{gd}	Gate-Drain Charge		-	30	-	

Note: *Pulse test，pulse width ≤ 300us，duty cycle ≤ 2%

Typical Operating Characteristics

Figure 1: Power Dissipation

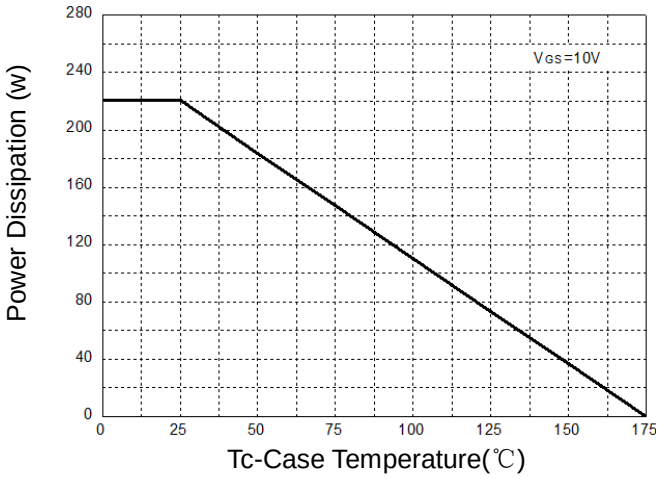

Figure 2: Drain Current

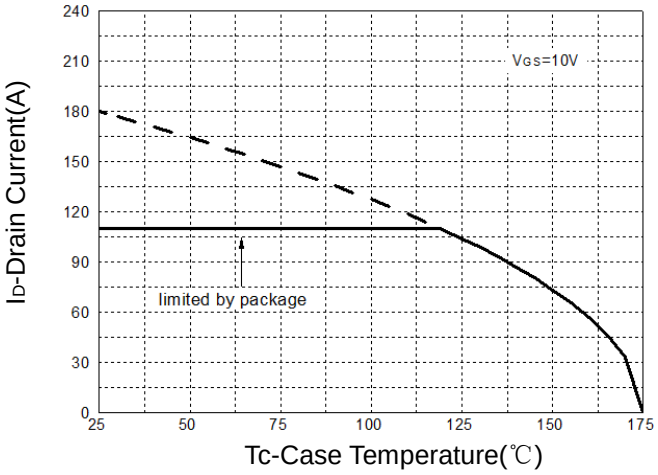

Figure 3: Safe Operation Area

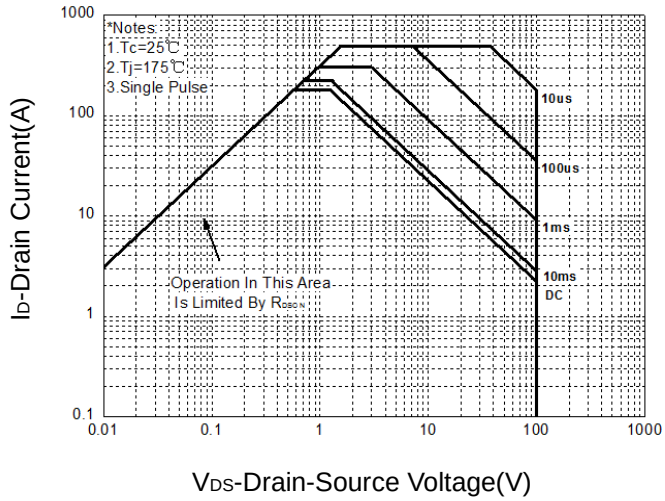

Figure 4: Thermal Transient Impedance

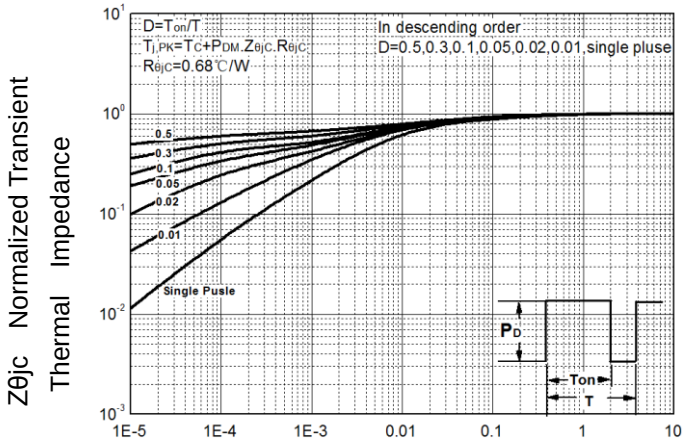

Maximum Effective Transient Thermal Impedance, Junction-to-Case

Figure 5: Output Characteristics

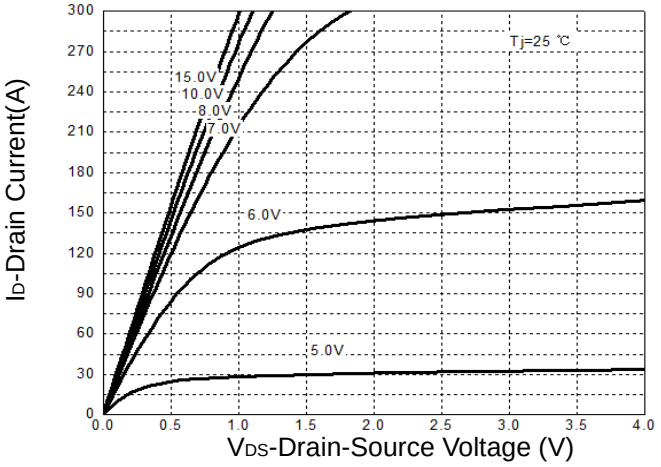

Figure 6: Drain-Source On Resistance

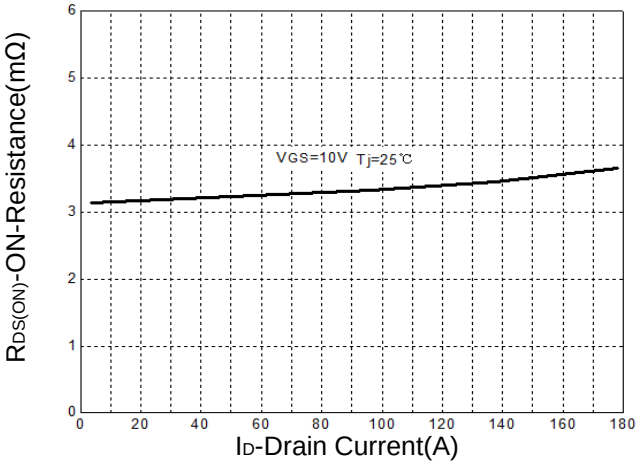

Typical Operating Characteristics(Cont.)

Figure 7: On-Resistance vs. Temperature

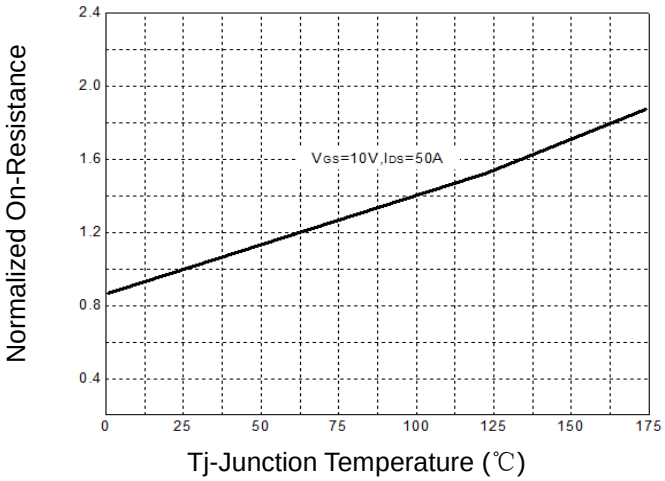

Figure 8: Source-Drain Diode Forward

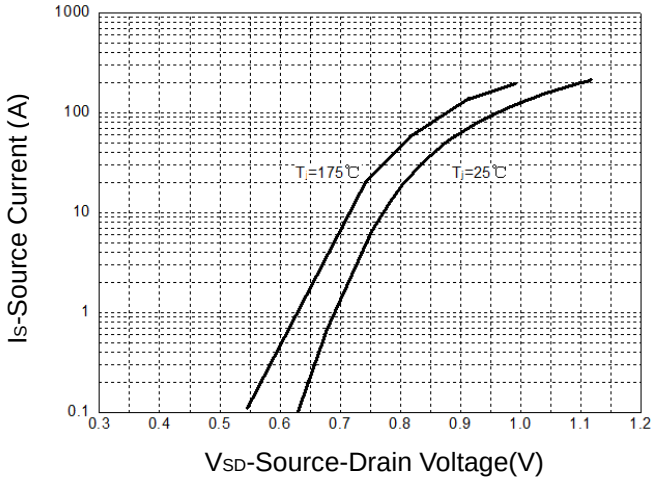

Figure 9: Capacitance Characteristics

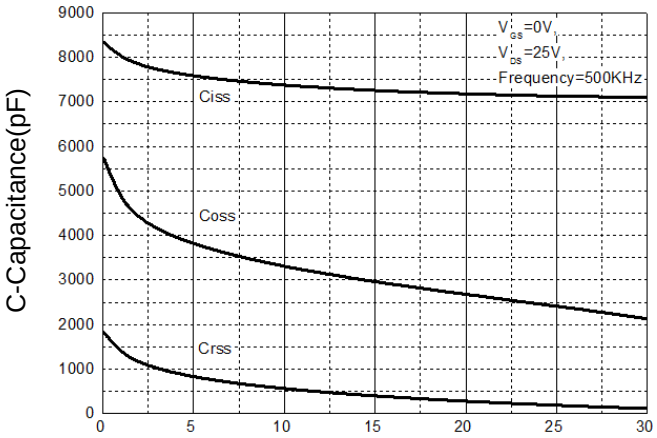

Figure 10: Gate Charge Characteristics

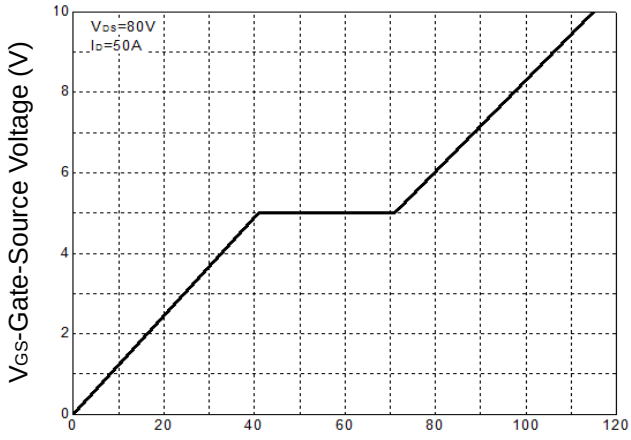

Avalanche Test Circuit

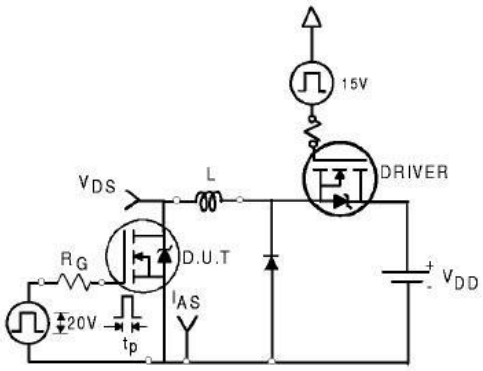

$$E_{AS} = \frac{1}{2} L I_{AS}^2$$

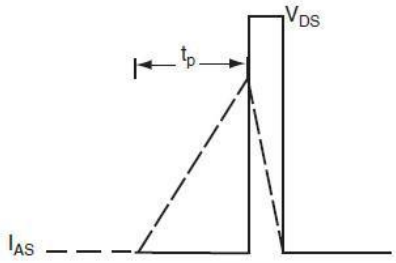

Switching Time Test Circuit

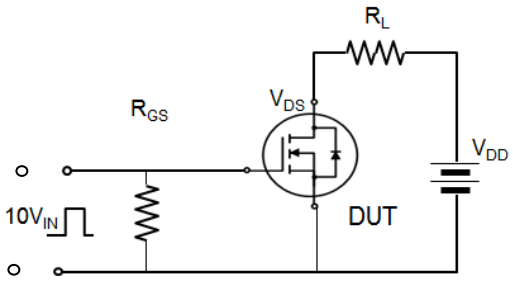

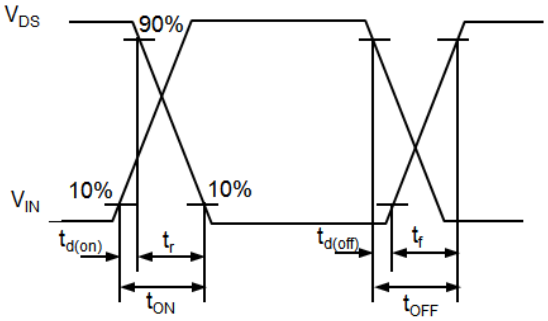

Gate Charge Test Circuit

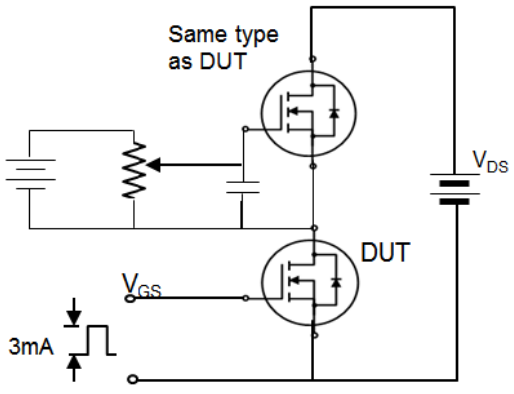

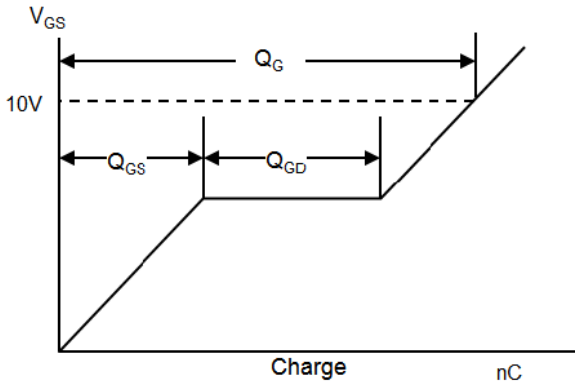

Device Per Unit

Package Type	Unit	Quantity
TO-220FB-3L	Tube	50
TO-263-2L	Tube	50
TO-263-2L	Reel	800

Package Information

TO-220FB-3L

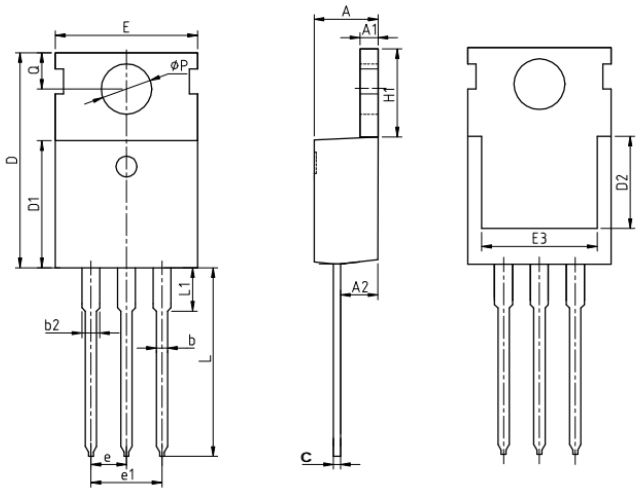

COMMON DIMENSIONS

SYMBOL	mm		
	MIN	NOM	MAX
A	4.37	4.57	4.77
A1	1.25	1.30	1.45
A2	2.20	2.40	2.60
b	0.70	0.80	0.95
b2	1.17	1.27	1.47
c	0.40	0.50	0.65
D	15.10	15.60	16.10
D1	8.80	9.10	9.40
D2	5.50	-	-
E	9.70	10.00	10.30
E3	7.00	-	-
e	2.54 BSC		
e1	5.08 BSC		
H1	6.25	6.50	6.85
L	12.75	13.50	13.80
L1	-	3.10	3.40
ΦP	3.40	3.60	3.80
Q	2.60	2.80	3.00

Package Information

TO-263-2L

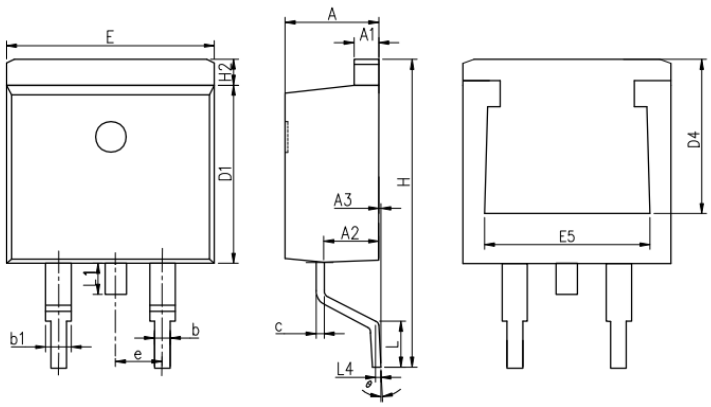

COMMON DIMENSIONS

SYMBOL	mm		
	MIN	NOM	MAX
A	4.37	4.57	4.77
A1	1.22	1.27	1.42
A2	2.49	2.69	2.89
A3	0	0.13	0.25
b	0.7	0.81	0.96
b1	1.17	1.27	1.47
c	0.3	0.38	0.53
D1	8.5	8.7	8.9
D4	6.6	-	-
E	9.86	10.16	10.36
E5	7.06	-	-
e	2.54 BSC		
H	14.7	15.1	15.5
H2	1.07	1.27	1.47
L	2	2.3	2.6
L1	1.4	1.55	1.7
L4	0.25 BSC		
θ	0°	5°	9°

Classification Profile

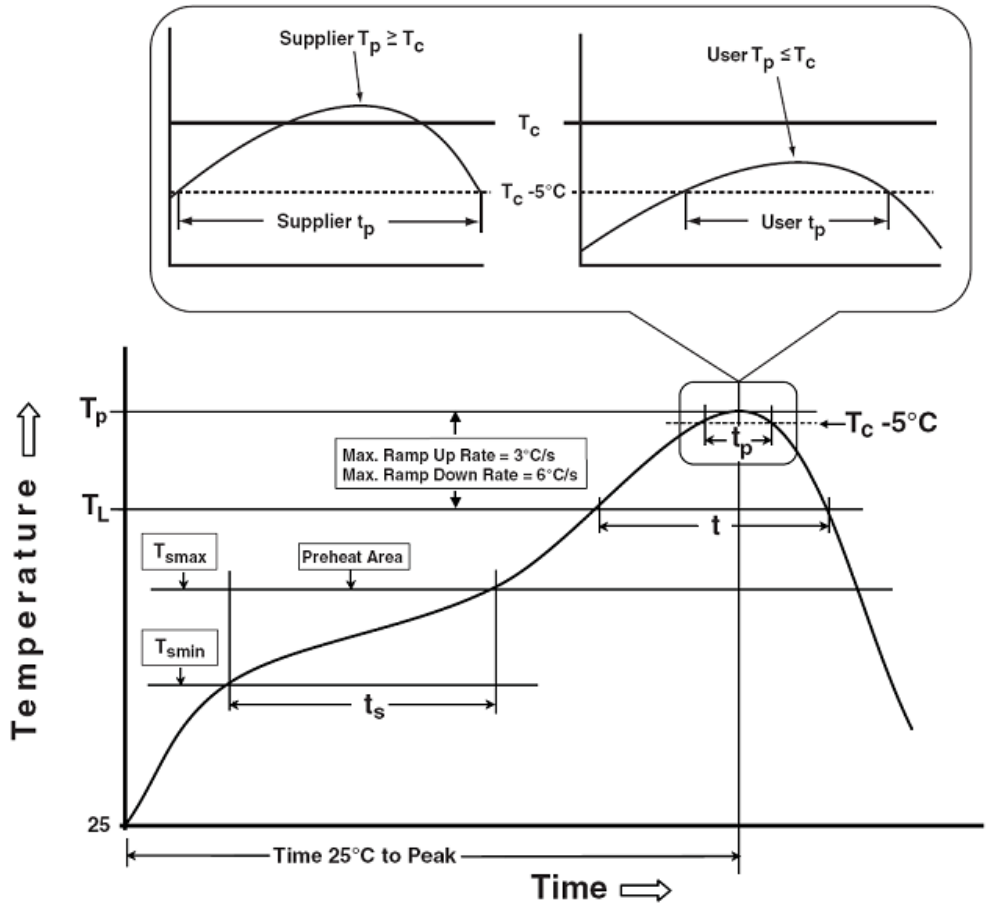

Classification Reflow Profiles

Profile Feature	Sn-Pb Eutectic Assembly	Pb-Free Assembly
Preheat & Soak Temperature min (T_{smin}) Temperature max (T_{smax}) Time (Tsmin to Tsmax) (t_s)	 100 °C 150 °C 60-120 seconds	 150 °C 200 °C 60-120 seconds
Average ramp-up rate ($T_{smax}$to T_P)	3 °C/second max.	3°C/second max.
Liquidous temperature (T_L) Time at liquidous (t_L)	183 °C 60-150 seconds	217 °C 60-150 seconds
Peak package body Temperature (T_p)*	See Classification Temp in table 1	SeeClassification Tempin table 2
Time (t_P)** within 5°C of the specified classification temperature (T_c)	20** seconds	30** seconds
Average ramp-down rate ($T_p$to T_{smax})	6 °C/second max.	6 °C/second max.
Time 25°C to peak temperature	6 minutes max.	8 minutes max.
*Tolerance for peak profile Temperature (T_p) is defined as a supplier minimum and a user maximum. ** Tolerance for time at peak profile temperature (t_p) is defined as a supplier minimum and a user maximum.		

Table 1.SnPb Eutectic Process – Classification Temperatures (Tc)

Package Thickness	Volume mm³ <350	Volume mm³ ⩾350
＜2.5 mm	235 °C	220 °C
≥2.5 mm	220 °C	220 °C

Table 2.Pb-free Process – Classification Temperatures (Tc)

Package Thickness	Volume mm³ <350	Volume mm³ 350-2000	Volume mm³ ⩾2000
<1.6 mm	260 °C	260 °C	260 °C
1.6 mm – 2.5 mm	260 °C	250 °C	245 °C
⩾2.5 mm	250 °C	245 °C	245 °C

Reliability Test Program

Test item	Method	Description
SOLDERABILITY	JESD-22, B102	5 Sec, 245°C
HTRB	JESD-22, A108	168/500/1000 Hrs, Bias @ 150°C
HTGB	JESD-22, A108	168 /500/1000Hrs, V_{GS}200% @ 150°C
PCT	JESD-22, A102	96 Hrs, 100%RH, 2atm, 121°C
TCT	JESD-22, A104	500 Cycles, -55°C~150°C

Customer Service
Worldwide Sales and Service: sales@hymexa.com
Technical Support: Technology@hymexa.com
Huayi Microelectronics Co., Ltd.
No.8928,Shangji Road,Economic and Technological Development Zone,Xi'an,China
TEL: (86-029) 86685706
FAX: (86-029) 86685705
E-mail: sales@hymexa.com
Web net: www.hymexa.com

Unikeyic Electronics

Global Electronic Components Distributor

Click to view pricing, inventory, delivery, and lifecycle information:

HUAYI:

HY1904B HY1906B HYG016N04LS1W HYG090ND06LS1C2 HYG190C04LA1S HY5110W HY5208W
HYG006N04LS1TA HYG023N04NR1P HY4903B6 HYG016N04NR1P HYG025N06LS1C2 HYG180N10LS1S
HYG045P03LQ1C2 HYG065N07NS1D HYG190P13NA1P HYG200N12NS1P HY1904D HY4306W
HYG022N10NS1TA HYG050N08NS1P HY3810B6 HYG065N03LR1C2 HYG170C03LR1S
HYG020N04NR1B HY5012W HYG025N06LS1D HYG014N03LR1P HYG020N04NR1P HYG035N08NS2C2