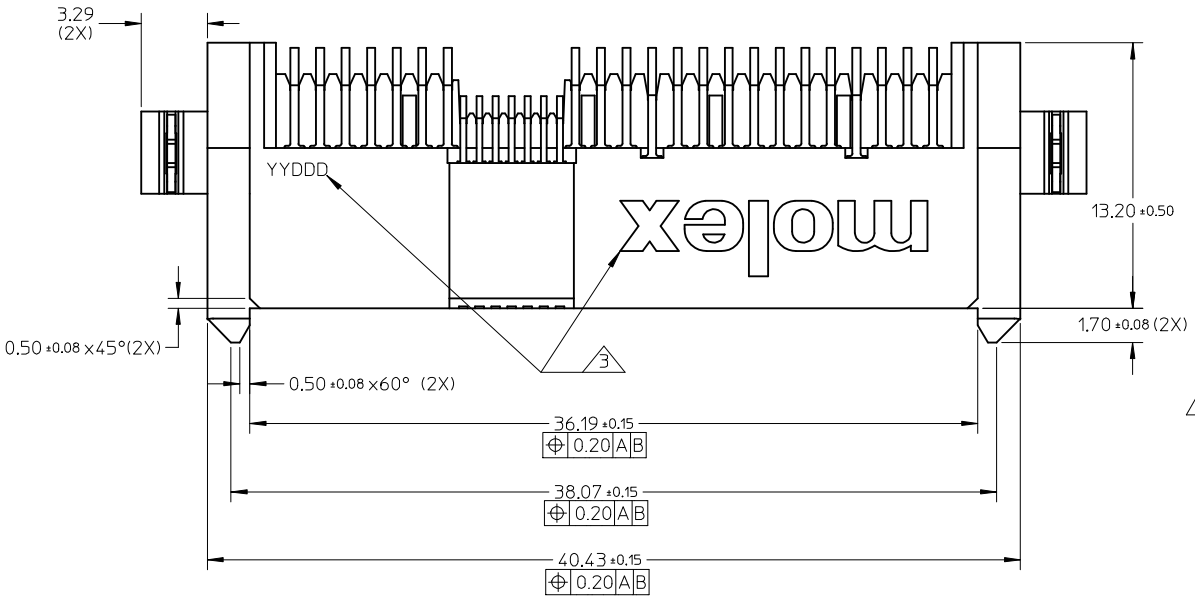

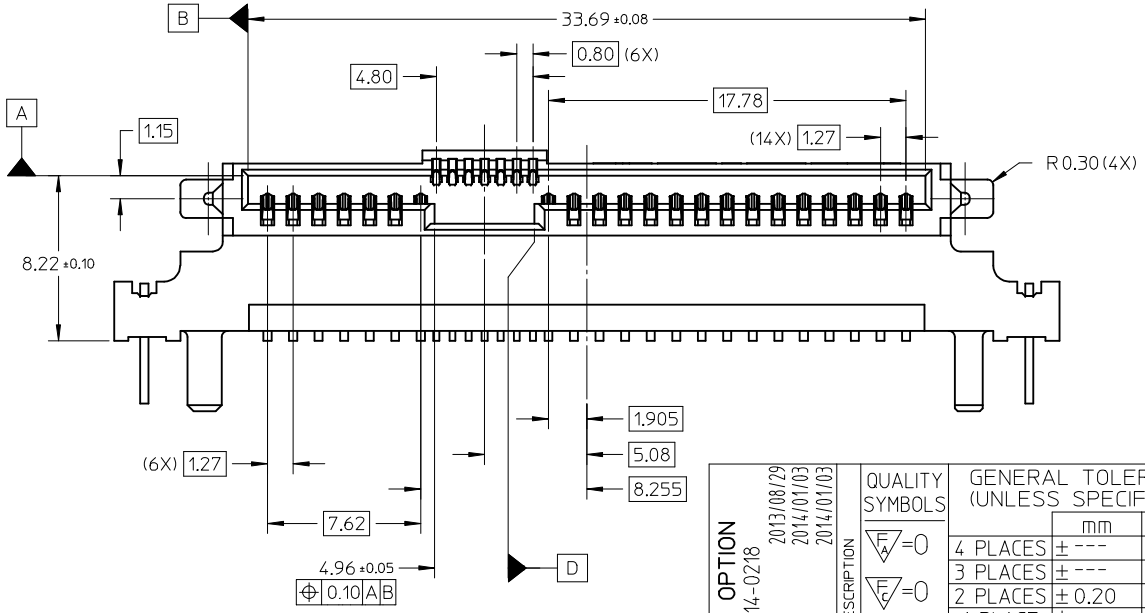

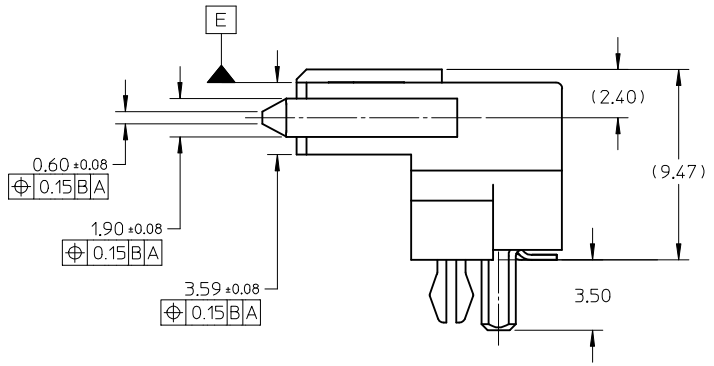

NOTES:

1. MATERIAL
   - HOUSING: NYLON 9T, GLASS FILLED, UL 94V-0, BLACK
   - CAP: LCP, GLASS FILLED, UL 94V-0, BLACK
   - TERMINAL: COPPER ALLOY
   - FORK LOCK/BLADE: COPPER ALLOY
2. PLATING:
   - TERMINAL:
     - CONTACT: 0.76µm MIN. SELECTIVE GOLD OVER 1.27µm MIN. NICKEL UNDERPLATE
     - SOLDERTAIL: 2.54µm MIN. TIN OVER 1.27µm MIN. NICKEL UNDERPLATE
   - FORK LOCK/BLADE:
     - 2.54µm MIN. TIN OVER 1.27µm MIN. NICKEL UNDERPLATE
3. MOLEX LOGO AND DATE CODE LOCATED APPROXIMATELY AS SHOWN.
4. NON FUNCTIONAL CORE HOLE MAY VARY.
5. THIS PRODUCT IS COMPLIANT TO RoHS DIRECTIVE WITH THE FOLLOWING BANNED SUBSTANCES - LEAD, MERCURY, CADMIUM, HEXAVALENT CHROMIUM, POLYBROMINATED BIPHENYLS AND POLYBROMINATED DIPHENYL ETHERS.
6. PRODUCT SPECIFICATION PS-87945-034 APPLIES.
7. MATES WITH : SFF-8482 PLUG
   SATA PLUG SERIES 87679, 87703 AND 87799
8. PACKAGING SPECIFICATION : TRAY : PK-87945-001
   TAPE & REEL : PK-87945-002

REV	DESCRIPTION	DRWN	CH'KD	APPR	DATE
C	ADD CAP OPTION EC NO: S2014-0218	SKANG	MLONG	MLONG	2013/08/29 2014/01/03 2014/01/03

QUALITY SYMBOLS
F_A=0
F_C=0
F_P=0

GENERAL TOLERANCES (UNLESS SPECIFIED)

	mm	INCH
4 PLACES	± ---	± ---
3 PLACES	± ---	± ---
2 PLACES	± 0.20	± ---
1 PLACE	± ---	± ---
0 PLACE	±	±

ANGULAR ± 3 °

DRAFT WHERE APPLICABLE MUST REMAIN WITHIN DIMENSIONS

DIMENSION STYLE	MM ONLY
SCALE	NTS
DESIGN UNITS	METRIC
	THIRD ANGLE PROJECTION
DRAWN BY	KCHO
DATE	2005/02/22
CHECKED BY	DKOH
DATE	2005/03/23
APPROVED BY	SKTOH
DATE	2005/03/23
MATERIAL NO.	SEE TABLE
DOCUMENT NO.	SD-87945-001
SHEET NO.	1 OF 6
SIZE	A3

TITLE: SERIAL ATTACH SCSI RECEPTACLE, RIGHT-ANGLE SMT, 7.07MM HEIGHT

molex

THIS DRAWING CONTAINS INFORMATION THAT IS PROPRIETARY TO MOLEX INCORPORATED AND SHOULD NOT BE USED WITHOUT WRITTEN PERMISSION

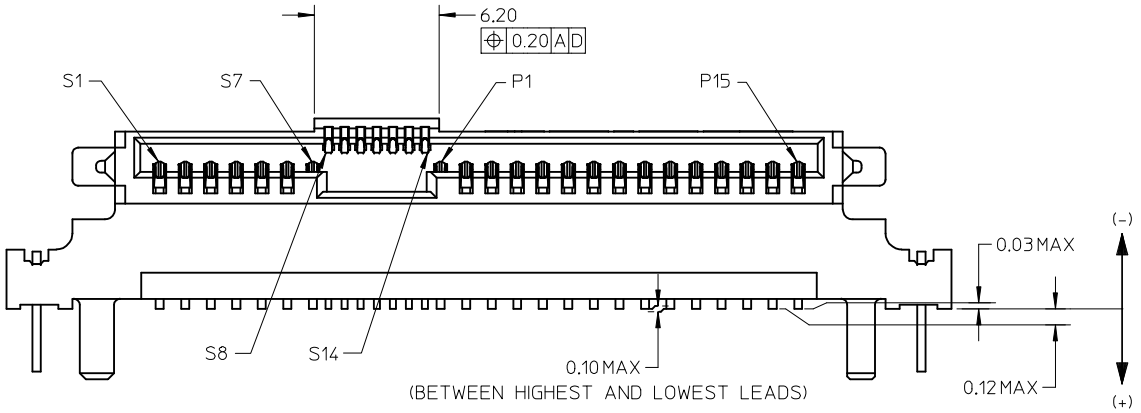

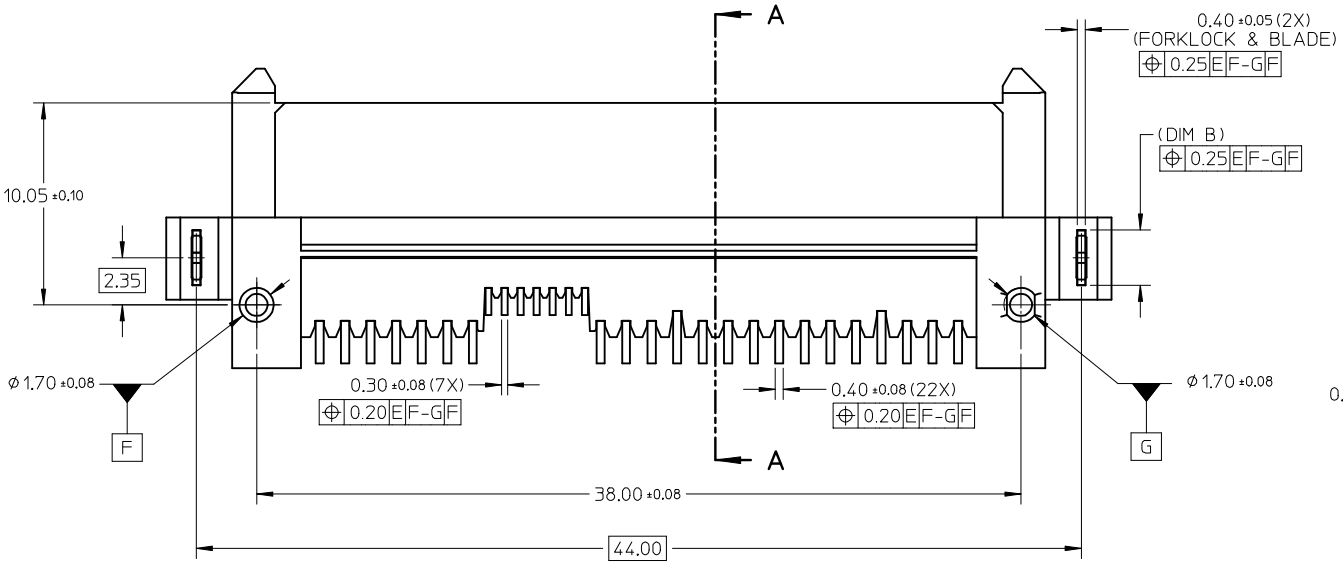

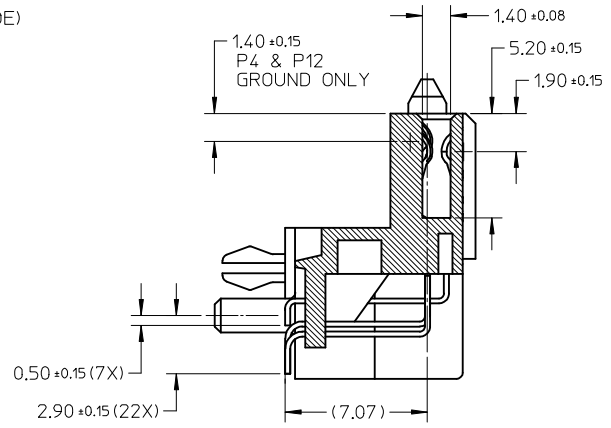

SECTION A-A

ADD CAP OPTION
EC NO: S2014-0218 2013/08/29
DRWN:SKANG 2014/01/03
CHKD:MLONG 2014/01/03
APPR:MLONG 2014/01/03
DESCRIPTION
REV
C

QUALITY SYMBOLS
FA=0
FC=0
FP=0

GENERAL TOLERANCES (UNLESS SPECIFIED)

	mm	INCH
4 PLACES	± ---	± ---
3 PLACES	± ---	± ---
2 PLACES	± 0.20	± ---
1 PLACE	± ---	± ---
0 PLACE	±	±

ANGULAR ± 3 °

DRAFT WHERE APPLICABLE MUST REMAIN WITHIN DIMENSIONS

DIMENSION STYLE: MM ONLY
SCALE: NTS
DESIGN UNITS: METRIC
THIRD ANGLE PROJECTION

		DATE
DRAWN BY	KCHO	2005/02/22
CHECKED BY	DKOH	2005/03/23
APPROVED BY	SKTOH	2005/03/23

TITLE: SERIAL ATTACH SCSI RECEPTACLE, RIGHT-ANGLE SMT, 7.07MM HEIGHT

molex

MATERIAL NO.: SEE TABLE
DOCUMENT NO.: SD-87945-001
SHEET NO.: 2 OF 6
SIZE: A3

THIS DRAWING CONTAINS INFORMATION THAT IS PROPRIETARY TO MOLEX INCORPORATED AND SHOULD NOT BE USED WITHOUT WRITTEN PERMISSION

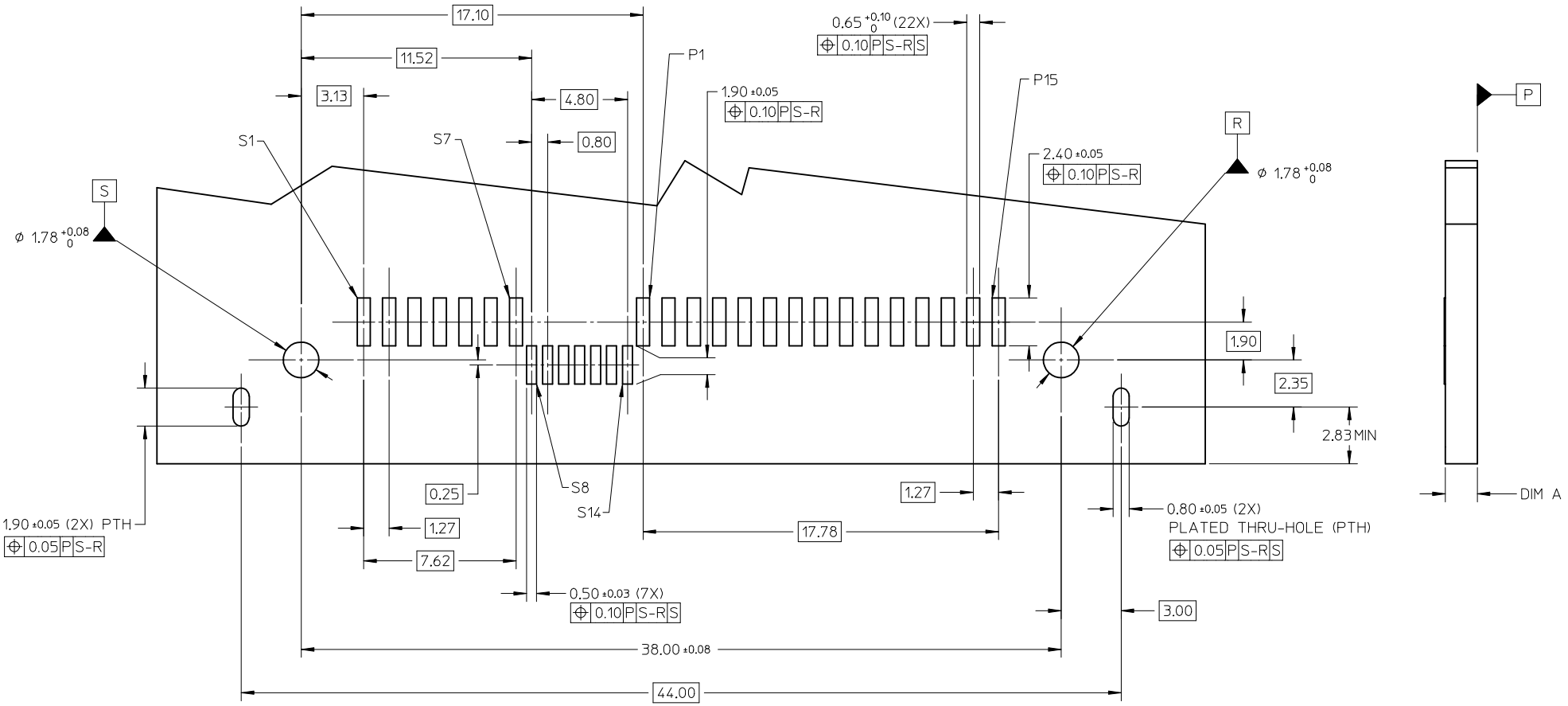

RECOMMENDED PCB LAYOUT

ADD CAP OPTION
EC NO: S2014-0218 2013/08/29
DRWN:SKANG 2014/01/03
CH'KD:MLONG 2014/01/03
APPR:MLONG 2014/01/03
DESCRIPTION
REV C

QUALITY SYMBOLS
FA=0
FC=0
FB=0

GENERAL TOLERANCES (UNLESS SPECIFIED)

	mm	INCH
4 PLACES	± ---	± ---
3 PLACES	± ---	± ---
2 PLACES	± 0.20	± ---
1 PLACE	± ---	± ---
0 PLACE	±	±

ANGULAR ± 3 °

DRAFT WHERE APPLICABLE MUST REMAIN WITHIN DIMENSIONS

DIMENSION STYLE: MM ONLY
SCALE: NTS
DESIGN UNITS: METRIC
THIRD ANGLE PROJECTION

DRAWN BY	KCHO	DATE 2005/02/22
CHECKED BY	DKOH	DATE 2005/03/23
APPROVED BY	SKTOH	DATE 2005/03/23

TITLE: SERIAL ATTACH SCSI RECEPTACLE, RIGHT-ANGLE SMT, 7.07MM HEIGHT

molex

MATERIAL NO.: SEE TABLE
DOCUMENT NO.: SD-87945-001
SHEET NO.: 3 OF 6
SIZE: A3

THIS DRAWING CONTAINS INFORMATION THAT IS PROPRIETARY TO MOLEX INCORPORATED AND SHOULD NOT BE USED WITHOUT WRITTEN PERMISSION

PART NUMBER WITHOUT CAP IN TRAY	PART NUMBER WITH CAP IN T&R	HOLD DOWN	DIM A (PCB THICKNESS)	DIM B
87945-0001	-	FORKLOCK	1.60±0.10	(2.18)
87945-0002	87945-0202	BLADE	-	(1.40)
87945-1001	87945-1201	FORKLOCK	1.834±0.183 TO 2.20±0.22 PCB FORKLOCK HOLE MUST BE PLATED THRU-HOLE (PTH) REGARDLESS WHETHER FORKLOCK IS SOLDERED OR NOT	(2.10)

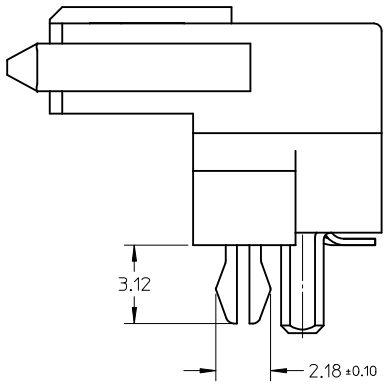

87945-0001

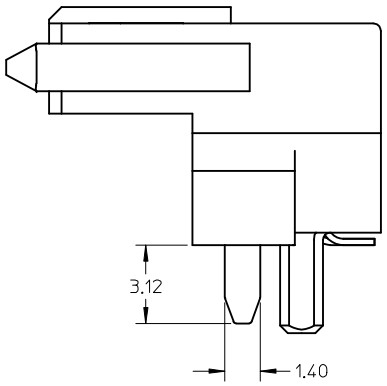

87945-0002 (WITHOUT CAP)
87945-0202 (WITH CAP)

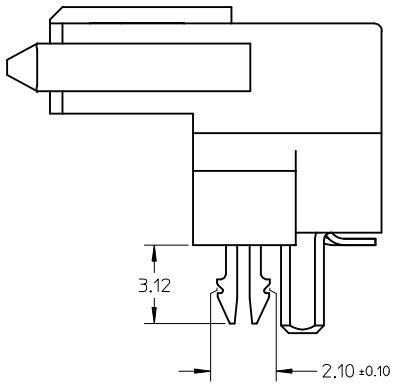

87945-1001 (WITHOUT CAP)
87945-1201 (WITH CAP)

ADD CAP OPTION
EC NO: S2014-0218 2013/08/29
DRWN:SKANG 2014/01/03
CH'KD:MLONG 2014/01/03
APPR:MLONG 2014/01/03
DESCRIPTION
C
REV

QUALITY SYMBOLS
$\sqrt{F_A}$=0
$\sqrt{F_C}$=0
$\sqrt{F_P}$=0

GENERAL TOLERANCES (UNLESS SPECIFIED)

	mm	INCH
4 PLACES	± ---	± ---
3 PLACES	± ---	± ---
2 PLACES	± 0.20	± ---
1 PLACE	± ---	± ---
0 PLACE	±	±
ANGULAR ± 3 °		

DRAFT WHERE APPLICABLE MUST REMAIN WITHIN DIMENSIONS

DIMENSION STYLE: MM ONLY
SCALE: NTS
DESIGN UNITS: METRIC
THIRD ANGLE PROJECTION

DRAWN BY: KCHO DATE: 2005/02/22
CHECKED BY: DKOH DATE: 2005/03/23
APPROVED BY: SKTOH DATE: 2005/03/23

TITLE: SERIAL ATTACH SCSI RECEPTACLE, RIGHT-ANGLE SMT, 7.07MM HEIGHT

molex

MATERIAL NO.: SEE TABLE
DOCUMENT NO.: SD-87945-001
SHEET NO.: 4 OF 6
SIZE: A3

THIS DRAWING CONTAINS INFORMATION THAT IS PROPRIETARY TO MOLEX INCORPORATED AND SHOULD NOT BE USED WITHOUT WRITTEN PERMISSION

ILLUSTRATION FOR PART WITH CAP

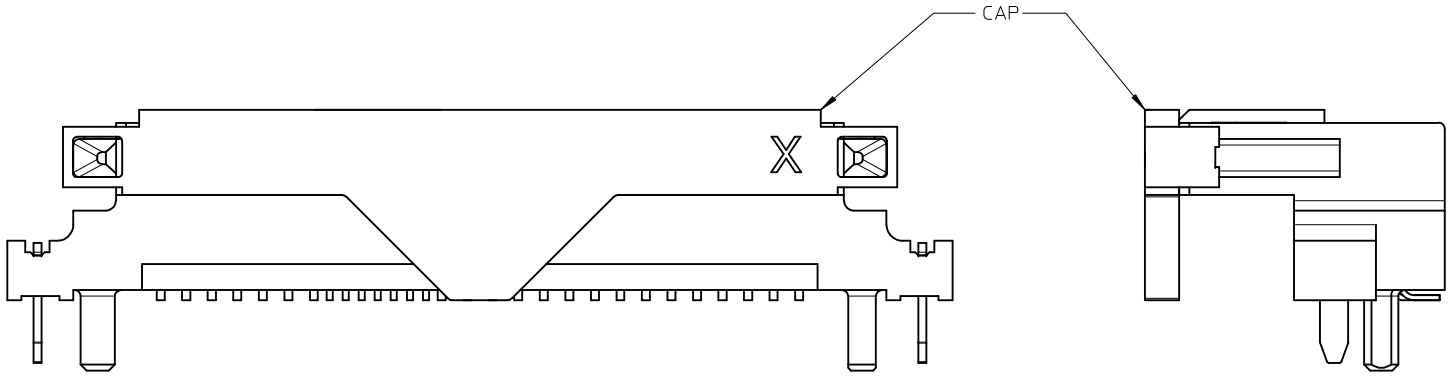

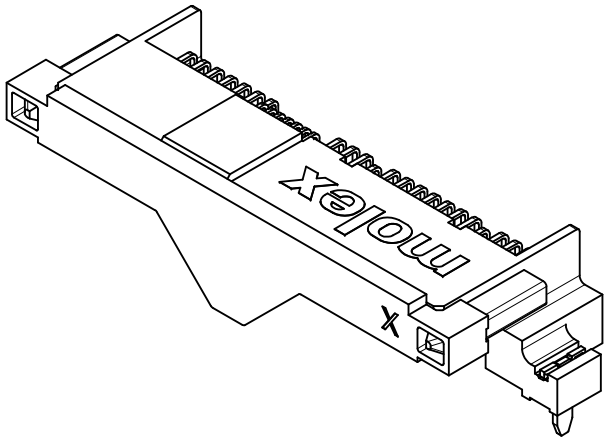

ADD CAP OPTION		
EC NO: S2014-0218	2013/08/29	
DRWN:SKANG	2014/01/03	
CHKD:MLONG	2014/01/03	
APPR:MLONG		
DESCRIPTION		
C	REV	

QUALITY SYMBOLS

$\sqrt{F_A}$=0

$\sqrt{F_C}$=0

$\sqrt{F_P}$=0

GENERAL TOLERANCES (UNLESS SPECIFIED)

	mm	INCH
4 PLACES	± ---	± ---
3 PLACES	± ---	± ---
2 PLACES	± 0.20	± ---
1 PLACE	± ---	± ---
0 PLACE	±	±

ANGULAR ± 3 °

DRAFT WHERE APPLICABLE MUST REMAIN WITHIN DIMENSIONS

DIMENSION STYLE	MM ONLY
SCALE	NTS
DESIGN UNITS	METRIC
	THIRD ANGLE PROJECTION
DRAWN BY	KCHO
DATE	2005/02/22
CHECKED BY	DKOH
DATE	2005/03/23
APPROVED BY	SKTOH
DATE	2005/03/23
MATERIAL NO.	SEE TABLE
TITLE	SERIAL ATTACH SCSI RECEPTACLE, RIGHT-ANGLE SMT, 7.07MM HEIGHT
DOCUMENT NO.	SD-87945-001
SHEET NO.	5 OF 6
SIZE	A3

THIS DRAWING CONTAINS INFORMATION THAT IS PROPRIETARY TO MOLEX INCORPORATED AND SHOULD NOT BE USED WITHOUT WRITTEN PERMISSION

PART WITH CAP IN T&R

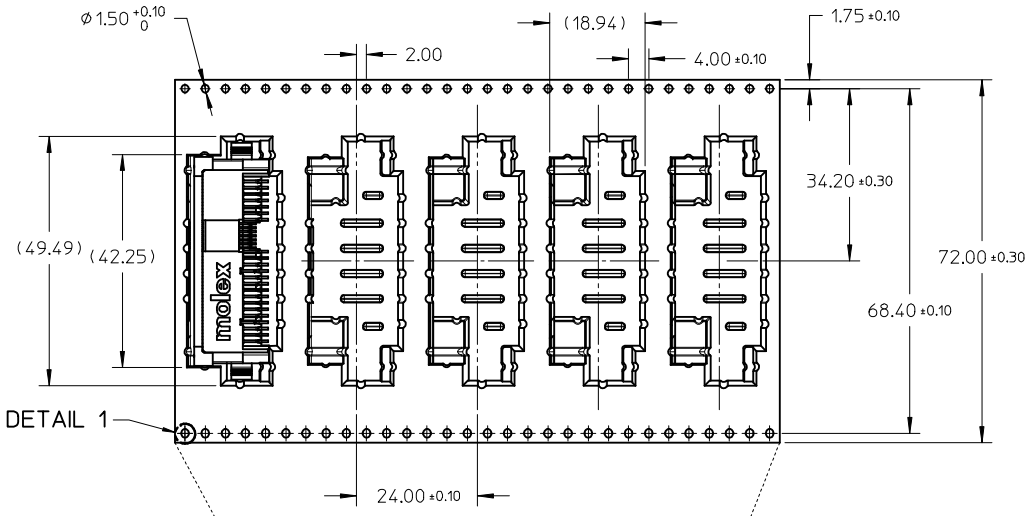

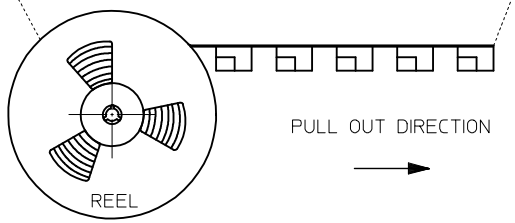

NOTES:

1. LEADER AND TRAILER TAPE

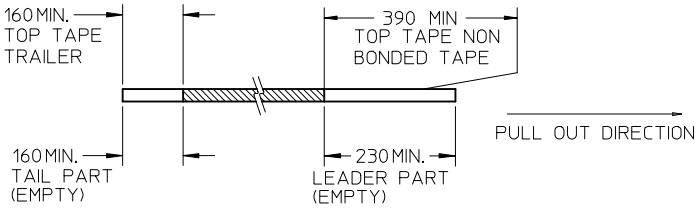

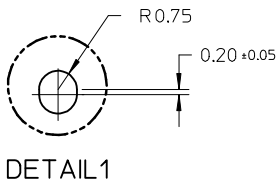

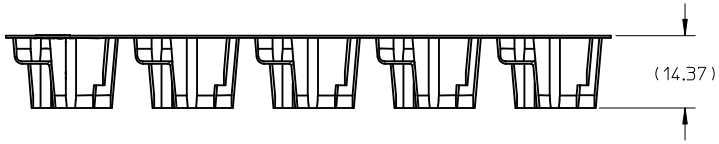

2. PEELING OFF FORCE OF THE TOP TAPE: 20 - 80gf.
   (PEELING DIRECTION AS SHOWN IN FOLLOWING FIGURE)

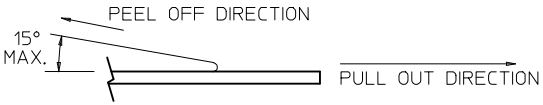

3. TAPE AND REEL SPECIFICATION IS AS PER EIA-481.
4. TAPE AND REEL QUANTITY : 150PCS
5. THE TAPE IS TREATED FOR ANTI-STATIC.

ADD CAP OPTION
EC NO: S2014-0218 2013/08/29
DRWN:SKANG 2014/01/03
CH'KD:MLONG 2014/01/03
APPR:MLONG
DESCRIPTION
REV

QUALITY SYMBOLS
FA=0
FC=0
FP=0

GENERAL TOLERANCES (UNLESS SPECIFIED)

	mm	INCH
4 PLACES	± ---	± ---
3 PLACES	± ---	± ---
2 PLACES	± 0.20	± ---
1 PLACE	± ---	± ---
0 PLACE	±	±

ANGULAR ± 3 °

DRAFT WHERE APPLICABLE MUST REMAIN WITHIN DIMENSIONS

DIMENSION STYLE: MM ONLY
SCALE: NTS
DESIGN UNITS: METRIC
THIRD ANGLE PROJECTION

DRAWN BY: KCHO DATE: 2005/02/22
CHECKED BY: DKOH DATE: 2005/03/23
APPROVED BY: SKTOH DATE: 2005/03/23

TITLE: SERIAL ATTACH SCSI RECEPTACLE, RIGHT-ANGLE SMT, 7.07MM HEIGHT

molex

MATERIAL NO.: SEE TABLE
DOCUMENT NO.: SD-87945-001
SHEET NO.: 6 OF 6
SIZE: A3

THIS DRAWING CONTAINS INFORMATION THAT IS PROPRIETARY TO MOLEX INCORPORATED AND SHOULD NOT BE USED WITHOUT WRITTEN PERMISSION

Unikeyic Electronics

Global Electronic Components Distributor

Click to view pricing, inventory, delivery, and lifecycle information:

molex:

5023860371 194290026 347910140 355240920 459850483 194270031 194290039 502584-1060 502585-0370 0194360214 357470310 502380-0800 197054301 34708-2028 348242245 503988100 528523070 0477256010 347928042 464373005 528061110 0464363133 502584-0870 528520870 0351510214 197134001 347072012 348268126 349672001 351820290