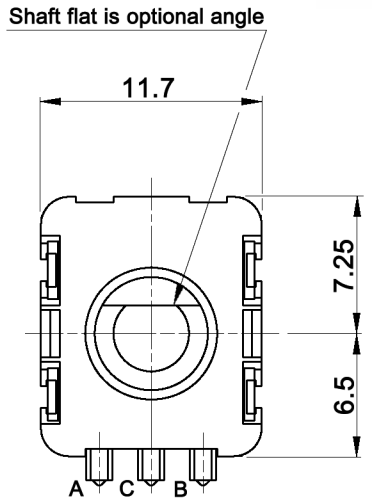

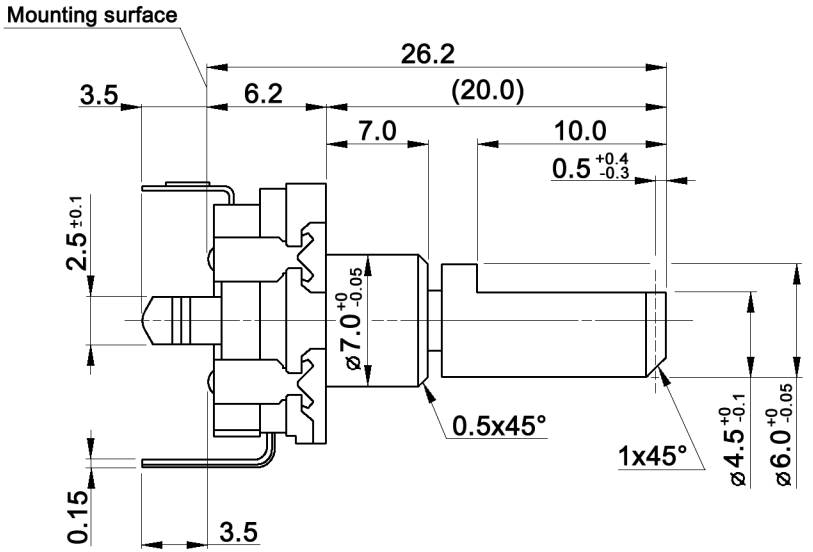

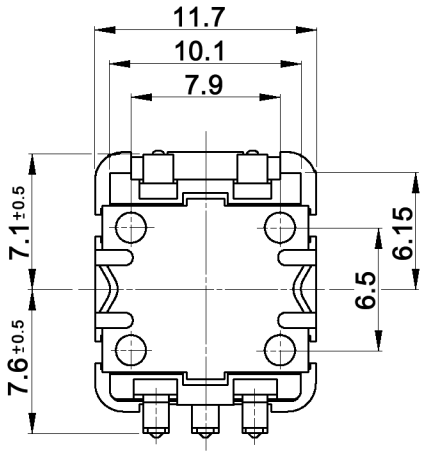

P.C.B. MOUNTING
(TOLERANCE ±0.1)
VIEWED FROM MOUNTING SIDE
t=1.6mm

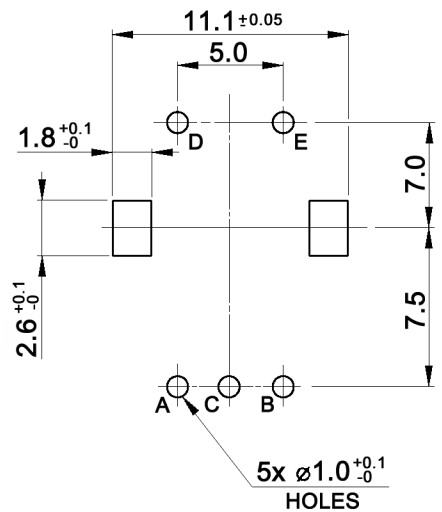

CIRCUIT DIAGRAM



TERMINAL DETAIL

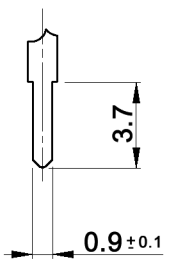

Compliance: RohS III (2015/863/EU)

Tolerances: ≤10: ±0.3mm 10-100: ±0.5mm			Date 04/08	Name dr
Soldering conditions	08/20	dr	knitter-switch	30 14 58
Output signal format	03/11	dr		
Temperatures	07/08	dr		
Modifications	Date	Name		

MERP11-20120B

Specifications:

Contact rating:	10mA, 5V DC (1mA min.)
Contact resistance:	100mOhm max.
Insulation resistance:	100MOhm min. at 250V DC / 1mA
Dielectric strength:	300V AC for 1 minute
Operating temperature:	-40°C to +85°C
Storage temperature:	-40°C to +85°C
Rotational life:	15 000 cycles
Detent torque:	12 +/-7mNm
Resolution:	20 pulses
No. of detents:	20 detents; step angle: 18° +/-3°
Soldering conditions:	pre-heat: 100°C max., 120 sec. max.
	wave soldering: 265°C max., 6 sec. max.
Switch:	Travel: $0.5\ ^{+0.4}_{-0.3}$ mm
	Mechanical life: 25 000 cycles
	Operating force: 6 +/-3N

OUTPUT SIGNAL FORMAT

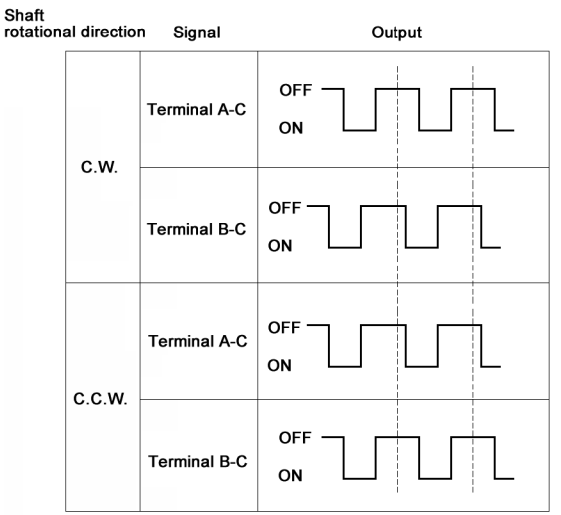

Compliance: RohS III (2015/863/EU)

Tolerances: ≤10: ±0.3mm 10-100: ±0.5mm			Date 04/08	Name dr	MERP11-20120B
Soldering conditions	08/20	dr	knitter-switch		30 14 58
Output signal format	03/11	dr			
Temperatures	07/08	dr			
Modifications	Date	Name			

Unikeyic Electronics

Global Electronic Components Distributor

Click to view pricing, inventory, delivery, and lifecycle information:

knitter-switch:

ATE1F TST 1 G MFP213N-RA MSS 3112 D MFP 223 P DRS 3110 ATE 1 E MPE106D MSS3122N-R
KR 207 MTE 106 D DRS13016 CO106 STM106DRA ATE 2 D KL 105 MTA 106 E MAV19A0F20E-724-JR
MMS238T MPS203R MAV16CBRE-3-JR-12V MTE106E MMP 1010 D-RA-1 MFS106D DPW 1 CG-R
SBS 5102 T DRR 3016 MTW 206 N APE1F MTW 206 P