PART NUMBER	ENGINEERING NO.	LENGTH ± TOLERANCE
1300500310	ENS1135M010	3' 3" +2.19"/-0" [1M +55.6/-0 mm]

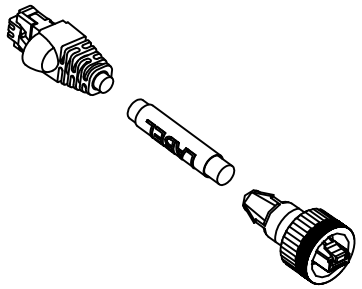

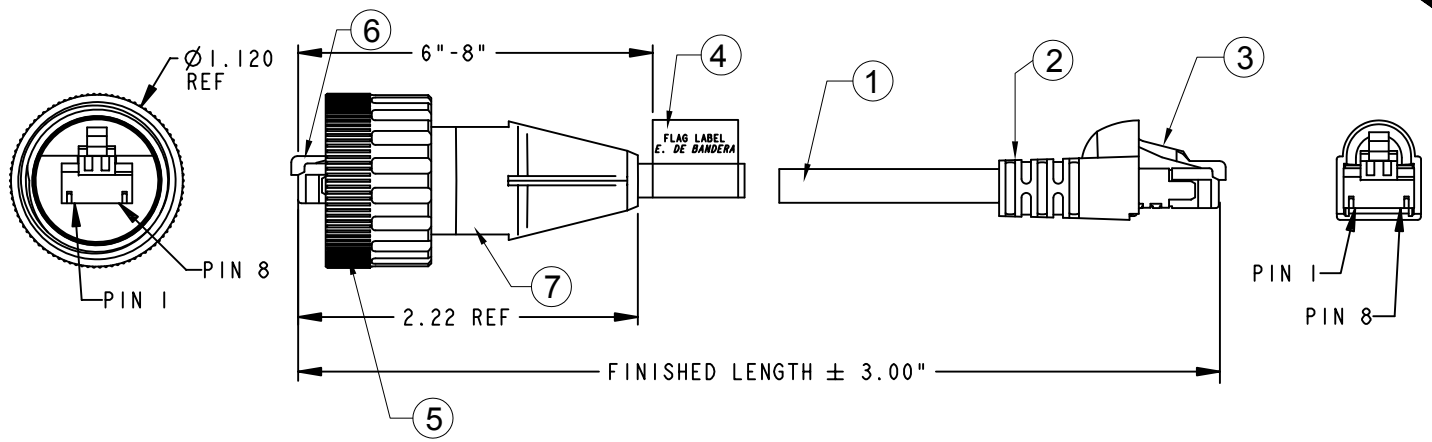

NOTES:

1) MATERIAL: SEE TABLE

2) FINISHES: SEE TABLE

3) CABLE: #24/8 SHIELDED TWISTED PAIR, PUR

4) ELECTRICAL DATA:
   ACCORDING TO CAT5e ETHERNET STANDARD
   MAX. VOLTAGE: 30V
   MAX. CURRENT 1.5A

5) ENVIRONMENTAL:
   PROTECTION IP67
   TEMPERATURE RANGE: -20€ TO +80€

6) WRAP LABEL IS MARKED WITH P/N & DATE CODE.

7) ASSEMBLY IS RoHS COMPLIANT.

WIRE LIST	
PIN #	COLOR
1	WHITE/BLUE
2	BLUE
3	WHITE/ORANGE
4	NOT USED
5	NOT USED
6	ORANGE
7	NOT USED
8	NOT USED
GND	DRAIN WIRE

ITEM	QTY.	DESCRIPTION	MATERIAL	FINISH
7	1	OVERMOLD	PUR	BLACK
6	1	RJ45 PLUG	POLYCARBONATE	CLEAR
5	1	COUPLING NUT	ABS	BLACK
4	1	LABEL	PLASTIC FILM	BLACK/YELLOW
3	1	RJ45 PLUG	POLYCARBONATE	CLEAR
2	1	BOOT	PVC	BLACK
1	1	ETHERNET CABLE-CAT5E	PUR JACKET	BLACK

RELEASE DRAWING
EC NO: WNA2010-0442 2010/01/18
DRWN: TVICKERS 2010/01/18
CH'KD: B.WOODMA 2010/01/19
APPR: DTITUS 2010/01/19
DESCRIPTION
A
REV

QUALITY SYMBOLS
▼=0
Ⓒ=0

GENERAL TOLERANCES (UNLESS SPECIFIED)

	mm	INCH
4 PLACES	±---	±---
3 PLACES	±---	±.005
2 PLACES	±0.13	±.010
1 PLACE	±0.25	±.020
ANGULAR ±1/2°		

DRAFT WHERE APPLICABLE MUST REMAIN WITHIN DIMENSIONS

DIMENSION STYLE: IN
SCALE: 1:1
DESIGN UNITS: INCH
THIRD ANGLE PROJECTION
DRAWN BY: ---- DATE: ----
CHECKED BY: B.WOODMA DATE: 2010/01/14
APPROVED BY: DTITUS DATE: 2010/01/19
MATERIAL NO.: SEE CHART
TITLE: ETHERNET MMJ IND./RJ45 IO BASE T SHIELD ASSEM PUR STRANDED CABLE
MOLEX INCORPORATED
DOCUMENT NO.: SD-130050-027
SHEET NO.: 1 OF 1
SIZE: A

THIS DRAWING CONTAINS INFORMATION THAT IS PROPRIETARY TO MOLEX INCORPORATED AND SHOULD NOT BE USED WITHOUT WRITTEN PERMISSION

Mouser Electronics

Authorized Distributor

Click to View Pricing, Inventory, Delivery & Lifecycle Information:

Molex:
1300500310