PART NO.	ENGINEERING NO.	FINISHED LENGTH
1300620301	334T30K09M010A3	1.00 M (3.28 FT)
1300620302	334T30K09M020A3	2.00 M (6.56 FT)
1300620303	334T30K09M030A3	3.00 M (9.84 FT)

CHART

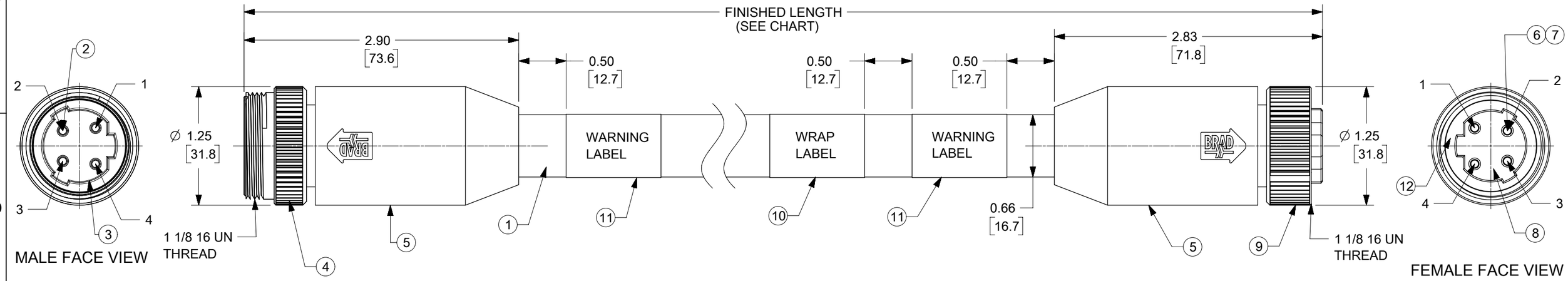

NOTE:
1) MATERIAL: SEE TABLE
2) FINISHES: SEE TABLE
3) FLAG LABEL IS MARKED WITH PART No., DATE CODE, VOLTAGE AND AMPERAGE
4) ELECTRICAL DATA
   POLE: 4
   MAX. VOLTAGE: IEC60664 600V
   UL2237 600V
   MAX. CURRENT: 25A
5) ENVIRONMENTAL
   PROTECTION: IP67
   TEMPERATURE RATING: -20C TO 90C
6) PACKAGING:
   ASSEMBLIES ARE BAGGED SEPARATELY IN POLY BAGS WITH BAR CODE LABEL ATTACHED TO OUTSIDE OF BAG
7) ASSEMBLY IS RoHS COMPLIANT
8) CERTIFICATION: UL2237 PENDING
9) DIMENSIONS ARE REFERENCE ONLY UNLESS OTHERWISE SPECIFIED
10) MINIMUM BEND RADIUS: 10 X CABLE DIAMTER (0.656")

WIRING DIAGRAM

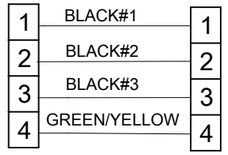

PART NUMBER MATRIX

334T30K09M010A3

CABLE TYPE
12/4C AWG
SHIELDED
HIGH FLEX

FINISH LENGTH
M005 = 0.5 METER
M010 = 1 METER
M100 = 10 METER

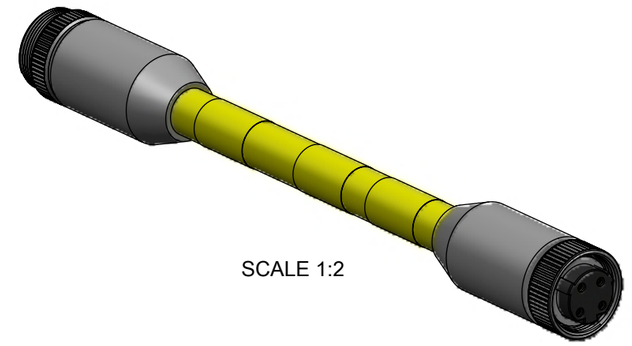

SCALE 1:2

ITM	DESCRIPTION	MATERIAL	FINISH
12	GASKET SEAL	SILICONE	LIGHT GRAY
11	WARNING LABEL	VINYL	MULTI COLOR
10	WRAP LABEL	VINYL	YELLOW
9	FEMALE COUPLING NUT	BRASS	NICKEL PLATED
8	4P FEMALE INSERT	TPE	BLACK
7	SOCKET SLEEVE	STAINLESS STEEL	
6	SOCKET CONTACT	BRASS	GOLD PLATED
5	OVER MOLD	TPE	GRAY
4	MALE COUPLING NUT	BRASS	NICKEL PLATED
3	4P MALE INSERT	TPE	BLACK
2	PIN CONTACT	BRASS	GOLD PLATED
1	12/4C AWG SHLD HIGH-FLEX, VFD	TPE JACKET, XLPE INSUL	YELLOW

RELEASE STATUS | P1 | RELEASE DATE | 2018/05/03 13:34:18

CABLE LENGTH TOLERANCES
>.3M [1FT]: +19mm-0 [+.75in-0]
.3 - .9M [1 - 3FT]: +44.5mm-0 [+1.75in-0]
.9 - 1.8M [3 - 6FT]: +55.6mm-0 [+2.19in-0]
1.8 - 3.7M [6 - 12FT: +88.9mm-0 [+3.50in-0]
3.7 - 7.3M [12 - 24FT]: +165.1mm-0 [+6.50in-0]
7.3-14.6M [24 - 48FT]: +317.5mm-0 [+12.50in-0]
14.6 - 30.5M [48-100FT]: +622.3mm-0 [+24.50in-0]
OVER 30M [100FT] +2% OF FINISHED LENGTH

QUALITY SYMBOLS
E = 0
F = 0
D = 0
▼ = 0
C = 0
☒ = 0
■ = 0
▽ = 0

THIS DRAWING CONTAINS INFORMATION THAT IS PROPRIETARY TO MOLEX ELECTRONIC TECHNOLOGIES, LLC AND SHOULD NOT BE USED WITHOUT WRITTEN PERMISSION

CHANGE DOC TYPE
EC NO: 176042 2018/05/02
DRWN: MZIELINSKI 2018/05/02
CHK'D: CCHRASTKA 2018/05/03
APPR: BWOODMAN

A2 | REV

GENERAL TOLERANCES (UNLESS SPECIFIED)
ANGULAR TOL ± °
4 PLACES ±
3 PLACES ±
2 PLACES ±
1 PLACE ±
0 PLACES ±
DRAFT WHERE APPLICABLE MUST REMAIN WITHIN DIMENSIONS

DIMENSION UNITS: HYBRID | SCALE: 1:1
DRWN BY: MZIELINSKI | DATE: 2017/04/11
CHK'D BY: TWOLDEGEBRIE | DATE: 2017/06/27
APPR BY: BWOODMAN | DATE: 2017/06/30
DRAWING SIZE: B | THIRD ANGLE PROJECTION

molex®

MC 4P M/MFE TRI 360S #12-4 HIGHFLEX
4-POLE MALE/FEMALE TRI KEY 360S 12/4C AWG
SHLD TPE BLK

PRODUCT CUSTOMER DRAWING

SERIES	MATERIAL NUMBER	CUSTOMER
130062	SEE CHART/MATRIX	

DOCUMENT NUMBER	DOC TYPE	DOC PART	SHEET NUMBER
1300620301	PSD	000	1 OF 1

FORMAT: tb-prod-B
REVISION: G
DATE: 2015/12/14

Mouser Electronics

Authorized Distributor

Click to View Pricing, Inventory, Delivery & Lifecycle Information:

Molex:
1300620306