MATERIAL NO.	ENGINEERING NO.	FINISHED LENGTH	REF. CABLE
1300680103	TC40301A56M010G	3' 3" +2.19"-0 (1M +55.6mm-0)	A56: 14 AWG, (.585 OD)
1300680111	TC40301K27M010G	3' 3" +2.19"-0 (1M +55.6mm-0)	K27: 14 AWG (.400 OD)
1300680112	TC40301K27M040G	13' 1" +6.50"-0 (4M +165mm-0)	
1300680114	TC40301K27M035G	11' 6" +3.50" (3.5M +88.9mm-0)	

CHART

(B2)

CABLE LENGTH TOLERANCES
>.3M [1FT]: +19mm-0 [+.75in-0]
.3 - .9M [1 - 3FT]: +44.5mm-0 [+1.75in-0]
.9 - 1.8M [3 - 6FT]: +55.6mm-0 [+2.19in-0]
1.8 - 3.7M [6 - 12FT: +88.9mm-0 [+3.50in-0]
3.7 - 7.3M [12 - 24FT]: +165.1mm-0 [+6.50in-0]
7.3-14.6M [24 - 48FT]: +317.5mm-0 [+12.50in-0]
14.6 - 30.5M [48-100FT]: +622.3mm-0 [+24.50in-0]
OVER 30M [100FT] +2% OF FINISHED LENGTH

QC FEMALE FACE VIEW

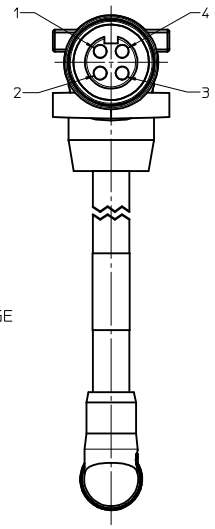

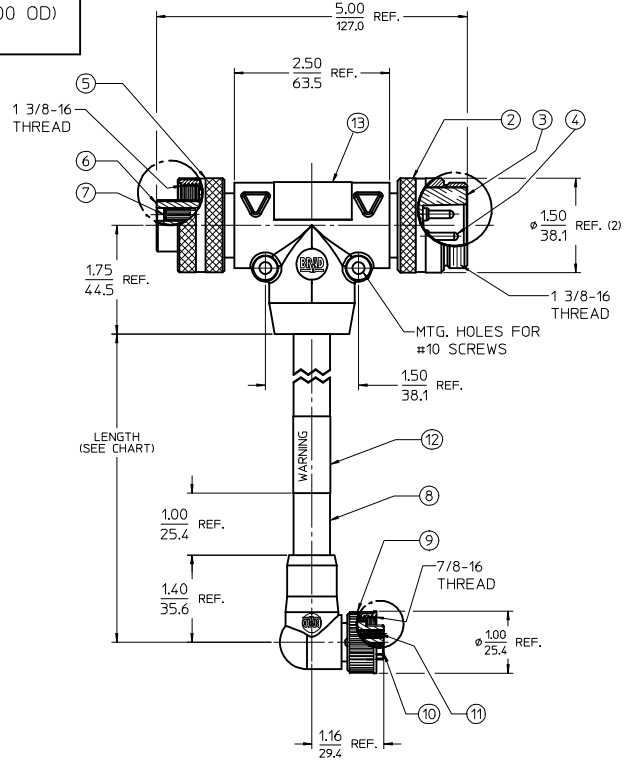

QC MALE FACE VIEW

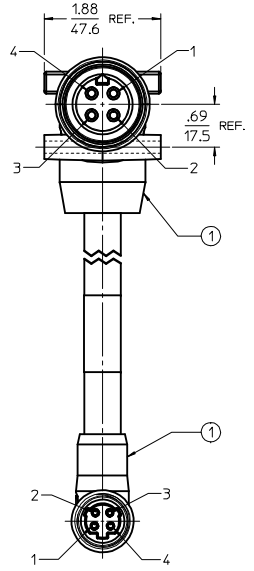

MC FEMALE FACE VIEW
(ALT KEY)

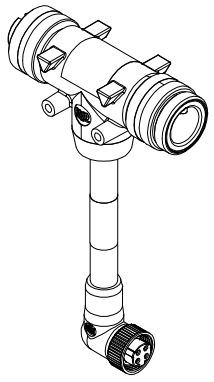

Iso1
Scale 3/4

NOTES:

1) MATERIAL: SEE TABLE
2) FINISHES: SEE TABLE
3) LABEL IS MARKED WITH P/N, DATE CODE, VOLTAGE & AMPERAGE
4) MATES WITH: MINI CHANGE ALT-KEY & QC 4 POLE CONNCTORS
5) ELECTRICAL RATINGS:
   MAX VOLTAGE: 600V AC/DC PER UL 2237
   480V AC/DC PER IEC 60664
   MAX THRU CURRENT: 32A (B2)
   MAX DROP CURRENT: 15A
6) ENVIRONMENTAL RATINGS:
   PROTECTION IP67
   TEMPERATURE RANGE: -20°C TO 90°C
7) PACKAGING:
   ASSEMBLIES ARE BAGGED SEPERATLY IN POLY BAGS
   WITH BAR CODE LABEL ATTACHED TO OUTSIDE OF BAG.
8) ASSEMBLY IS RoHS COMPLIANT BY EXEMPTION
9) AGENCY CERTIFICATIONS:
   UL 2237 LISTED, FILE E258922

TABLE

ITEM	DESCRIPTION	MATERIAL	FINISH
13	P/N LABEL	VINYL	BLACK/YELLOW
12	WARNING LABEL	VINYL	BLACK/ORANGE
11	MC SOCKET CONTACT	COPPER ALLOY	GOLD PLATED
10	MC FEMALE INSERT	PVC	BLACK
9	MC COUPLING NUT	ZINC ALLOY	BLACK E-COAT
8	CABLE, SEE CHART	SEE P/N LEGEND	SEE P/N LEGEND
7	QC SOCKET/PIN CONTACT	COPPER ALLOY	GOLD PLATED
6	QC FEMALE INSERT	PVC	BLACK
5	QC FEMALE COUPLING NUT	ALUMINUM	CLEAR ANODIZE
4	QC SOCKET/PIN CONTACT-GRND	COPPER ALLOY	GOLD PLATED
3	QC MALE INSERT	PVC	BLACK
2	QC MALE COUPLING NUT	ALUMINUM	CLEAR ANODIZE
1	OVERMOLD(S)	PVC	BLACK

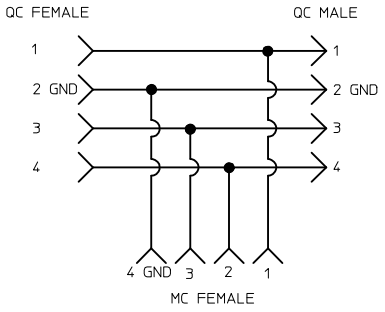

WIRE DIAGRAM

CABLE P/N LEGEND

TC40301K27M010G

COLOR: BLACK
FINISHED LENGTH
M001= 0.1 METER
M010= 1 METER
M100= 10 METER
CABLE TYPE:
A56 - 14 AWG TC-ER/STOOW, BLACK PVC
K27 - 14 AWG TC-ER, BLACK TPE HI-FLEX

WAS 25A, ADD 480V
PER ECR 1P-2007-09108 ADD-10108
DRWN:RSTONE 2017/03/24
CHK'D:M ZIELINSKI 2017/03/27
APPR:BWOODMAN 2017/04/06
DESCRIPTION
REV B2

QUALITY SYMBOLS
▼=0
▽=0

GENERAL TOLERANCES (UNLESS SPECIFIED)

	mm	INCH
4 PLACES	± ---	± ---
3 PLACES	± ---	± ---
2 PLACES	± ---	± ---
1 PLACE	± ---	± ---
0 PLACE	± ---	± ---
ANGULAR	±---°	

DRAFT WHERE APPLICABLE MUST REMAIN WITHIN DIMENSIONS

DIMENSION STYLE: IN/MM
SCALE: 1:1
DESIGN UNITS: INCH
THIRD ANGLE PROJECTION

DRAWN BY: RSTONE DATE: 2013/05/16
CHECKED BY: B RUPERT DATE:
APPROVED BY: BWOODMAN DATE: 2013/06/21
MATERIAL NO.: SEE CHART
SIZE: D

TITLE: QC 4P TEE TO MC FEM 90D 14/4, ALT KEY

molex

DOCUMENT NO.: SD-130068-019
SHEET NO.: 1 OF 1

THIS DRAWING CONTAINS INFORMATION THAT IS PROPRIETARY TO MOLEX INCORPORATED AND SHOULD NOT BE USED WITHOUT WRITTEN PERMISSION

Mouser Electronics

Authorized Distributor

Click to View Pricing, Inventory, Delivery & Lifecycle Information:

Molex:
1300680103