中科微电
CTMsemi

ZK40N100T

N-channel Enhancement Mode Power MOSFET

Features

- Advanced Trench Technology
- Excellent $R_{DS(ON)}$ and Low Gate Charge
- Lead free product is acquired
- 100% UIS TESTED!
- 100% ΔVds TESTED!

Product Summary

Parameters	Value	Unit
V_{DSS}	40	V
$V_{GS(th)_Typ}$	1.5	V
I_D(@V_{GS}=10V)	90	A
$R_{DS(ON)_Typ}$(@V_{GS}=10V	3.6	mΩ
$R_{DS(ON)_Typ}$(@V_{GS}=4.5V	4.8	mΩ

Applications

- PWM Application
- Load Switch
- Power Management

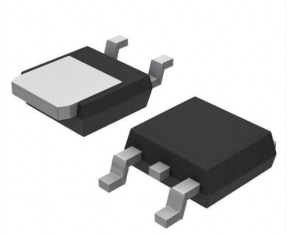

TO-252-2L Top View

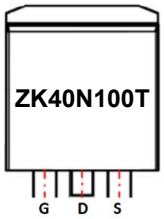

Marking

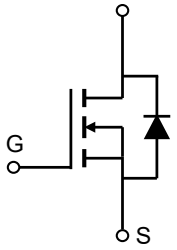

Schematic Diagram

Device	Marking	Package	Packing	Reel Size	Tape Width	Reel (pcs)
ZK40N100T	40N100	TO-252	Reel	N/A	N/A	2500

MAXIMUM RATINGS (T_a=25℃ unless otherwise noted)

Parameter		Symbol	Limit	Unit
Drain-Source Voltage		V_{DS}	40	V
Gate-Source Voltage		V_{GS}	±20	V
Continuous Drain Current	T_C = 25°C	I_D	90	A
	T_C = 100°C		55	
Pulsed Drain Current		I_{DM}	360	A
Single Pulsed Avalanche Energy		E_{AS}	91	mJ
Power Dissipation		P_D	114	W
Thermal Resistance, Junction to Case		$R_{\theta JC}$	1.1	℃/W
Operating Junction and Storage Temperature Range		T_J ,T_{stg}	-55 to 150	℃

MOSFET ELECTRICAL CHARACTERISTICS

T_a=25℃ unless otherwise specified

Parameter	Symbol	Test Condition	Min	Typ	Max	Unit
Off characteristics						
Drain-source breakdown voltage	$V_{(BR)\,DSS}$	V_{GS} = 0V, I_D = 1mA	40			V
Zero gate voltage drain current	I_{DSS}	V_{DS} = 40V, V_{GS} =0V			1.0	μA
Gate-body leakage current	I_{GSS}	V_{DS} = 0V, V_{GS} =±20V			±100	nA
On characteristics ④						
Gate-threshold voltage	$V_{GS(th)}$	V_{DS} =V_{GS}, I_D =250uA	1.0	1.5	2.2	V
Static drain-source on-sate resistance	$R_{DS(on)}$	V_{GS} =10V, I_D =20A		3.6	4.8	mΩ
		V_{GS} =4.5V, I_D =15A		4.8	6.6	mΩ
Dynamic characteristics ④⑤						
Input capacitance	C_{iss}	V_{DS} =20V,V_{GS} =0V f =1MHz		3200		pF
Output capacitance	C_{oss}			269		
Reverse transfer capacitance	C_{rss}			242		
Gate Resistance	R_G	f =1MHz		3.2		Ω
Switching characteristics ④⑤						
Total gate charge	Q_g	V_{GS}=0 to 10V V_{DS}=20V, I_D=45A		68		nC
Gate-source charge	Q_{gs}			10		
Gate-drain charge	Q_{gd}			18		
Turn-on delay time	$t_{d(on)}$	V_{DS}=15V,I_D=45A V_{GS}=10V,R_{GEN}=4.7Ω		12		ns
Turn-on rise time	t_r			66		
Turn-off delay time	$t_{d(off)}$			48		
Turn-off fall time	t_f			45		
Drain-Source Diode Characteristics						
Drain-source diode forward voltage	V_{SD} ④	V_{GS} =0V, I_S=1A			1.2	V
Continuous drain-source diode forward current	I_S ①	T_C =25℃			90	A
Maximum Pulsed Drain-Source Diode Forward Current	I_{SM}				360	

Notes:

1. Repetitive Rating: Pulse Width Limited by Maximum Junction Temperature
2. EAS condition: T J =25℃, V DD =50V, VG =10V, RG =25Ω, L=0.5mH.
3. Pulse Test: Pulse Width≤300μs, Duty Cycle≤0.5%

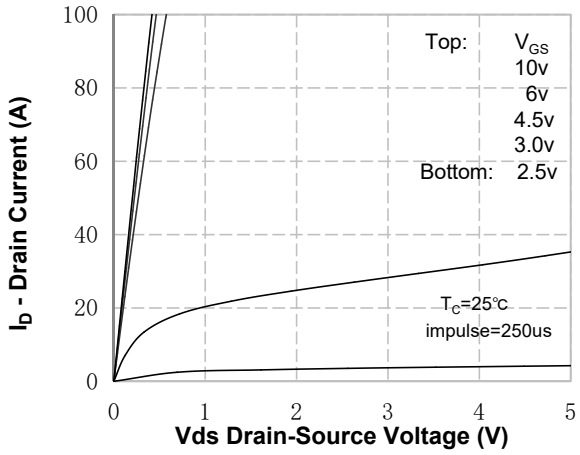

Figure 1. On-Region Characteristics

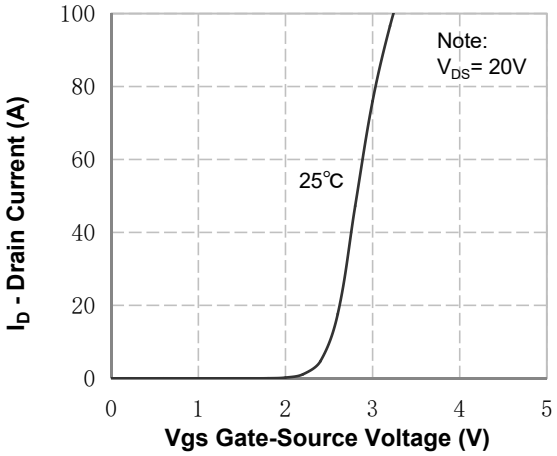

Figure 2. Transfer Characteristics

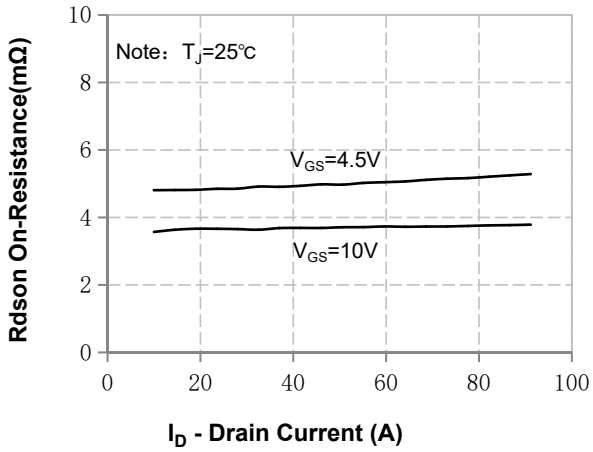

Figure 3. On-Resistance Variation vs Drain Current and Gate Voltage

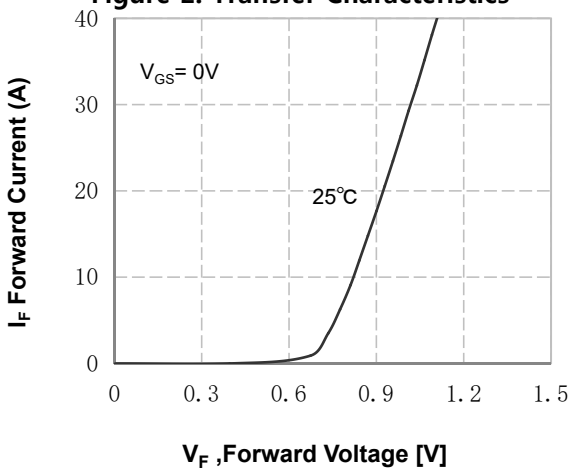

Figure 4. Body Diode Forward Voltage Variation with Source Current and Temperature

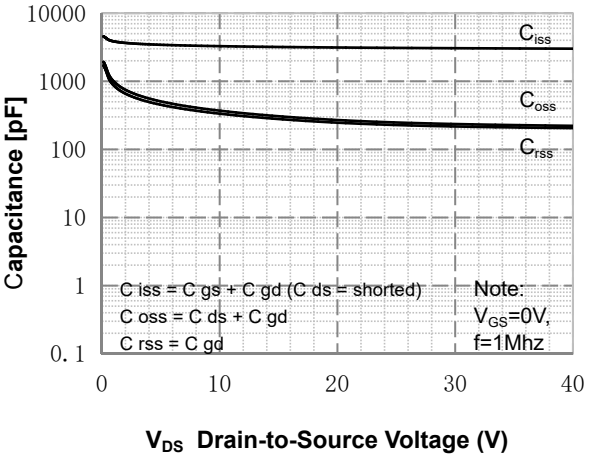

Figure 5. Capacitance Characteristics

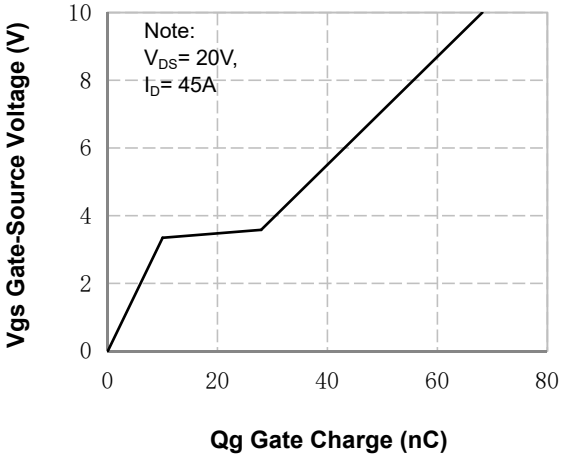

Figure 6. Gate Charge Characteristics

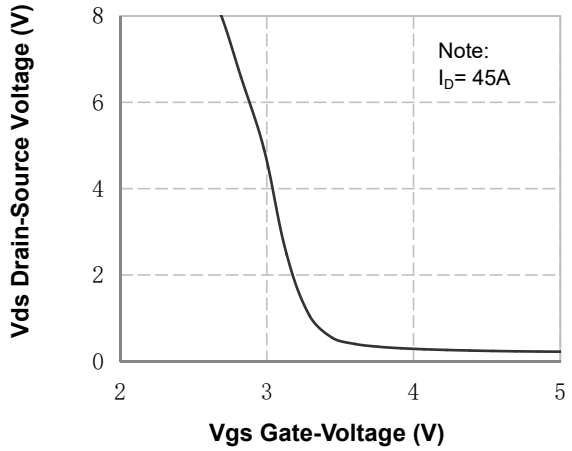

Figure 7. Vds Drain-Source Voltage vs Gate Voltage

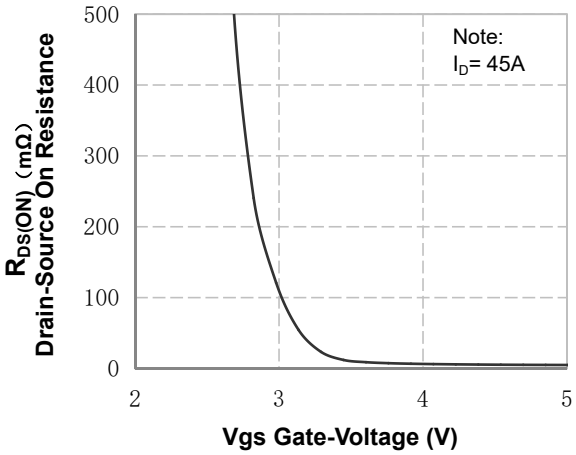

Figure 8. On-Resistance vs Gate Voltage

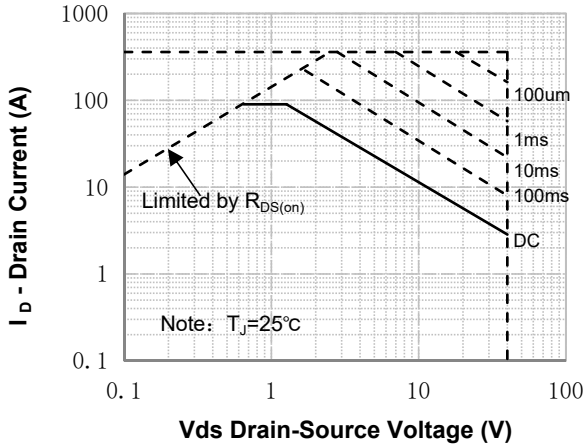

Figure 9. Maximum Safe Operating Area

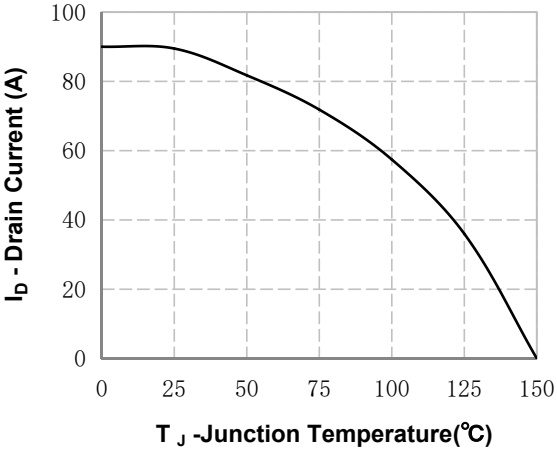

Figure 10. Maximum Continuous Drain Current vs Temperature

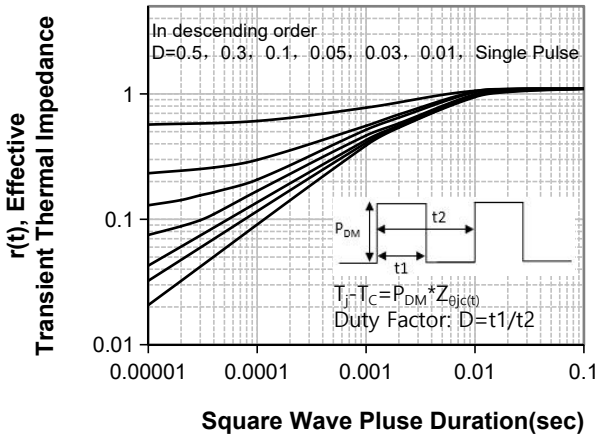

Figure 11. Transient Thermal Response Curve

Test Circuit

Gate Charge Test Circuit & Waveform

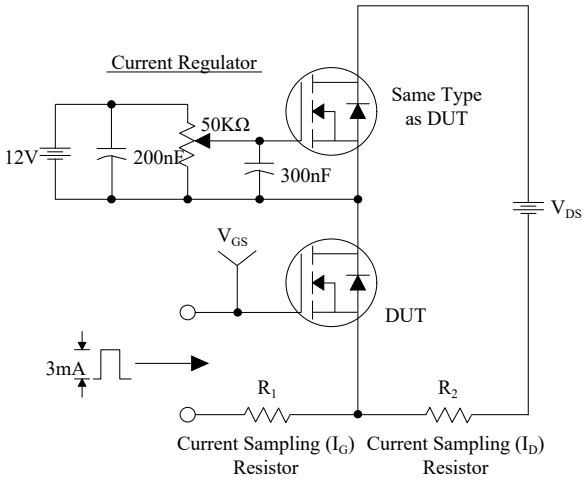

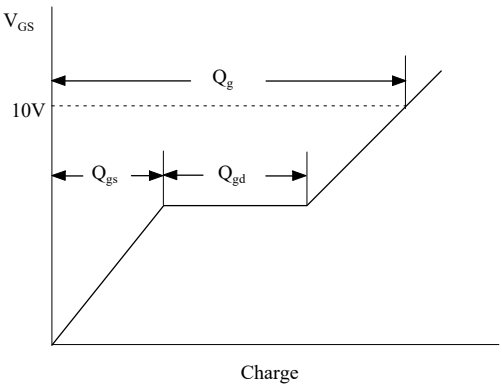

Resistive Switching Test Circuit & Waveforms

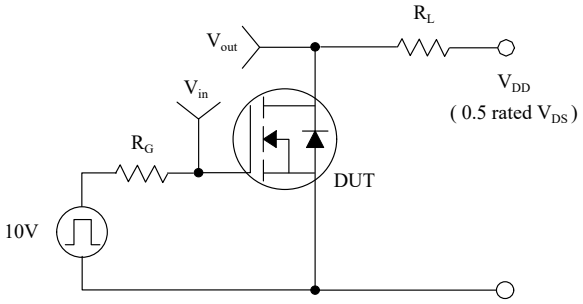

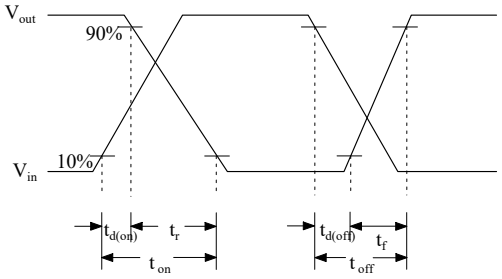

Unclamped Inductive Switching Test Circuit & Waveforms

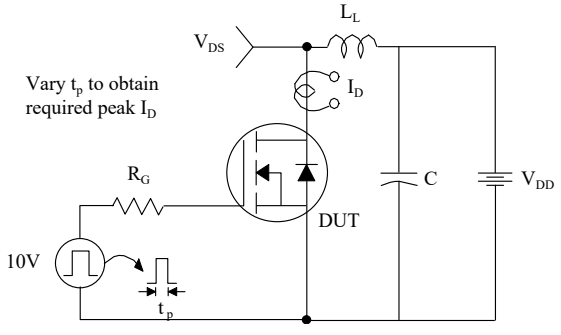

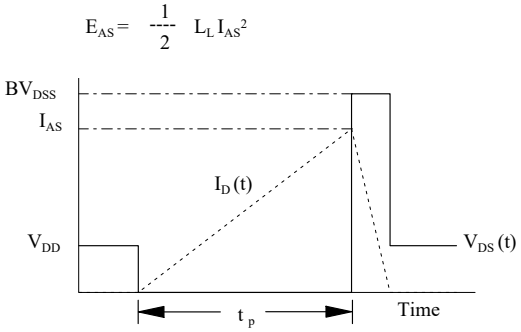

Peak Diode Recovery dv/dt Test Circuit & Waveforms

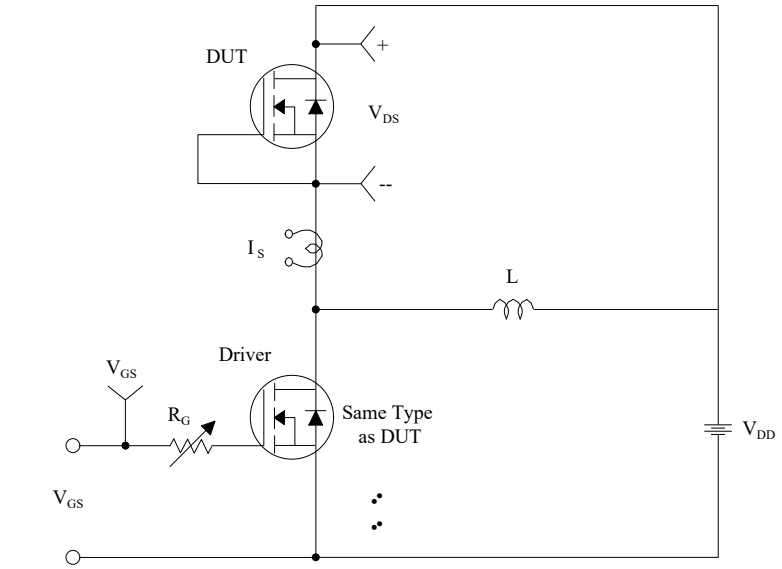

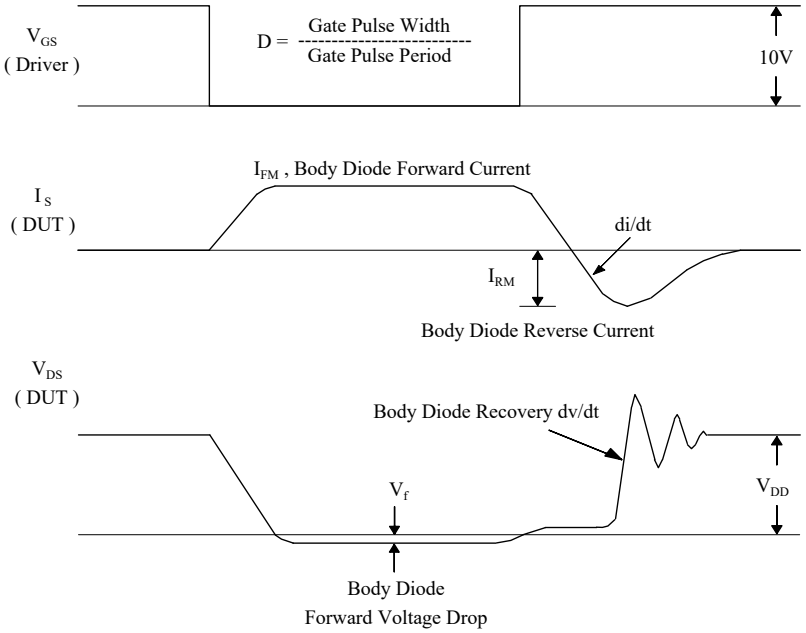

Package Mechanical Data(TO-252-2L)

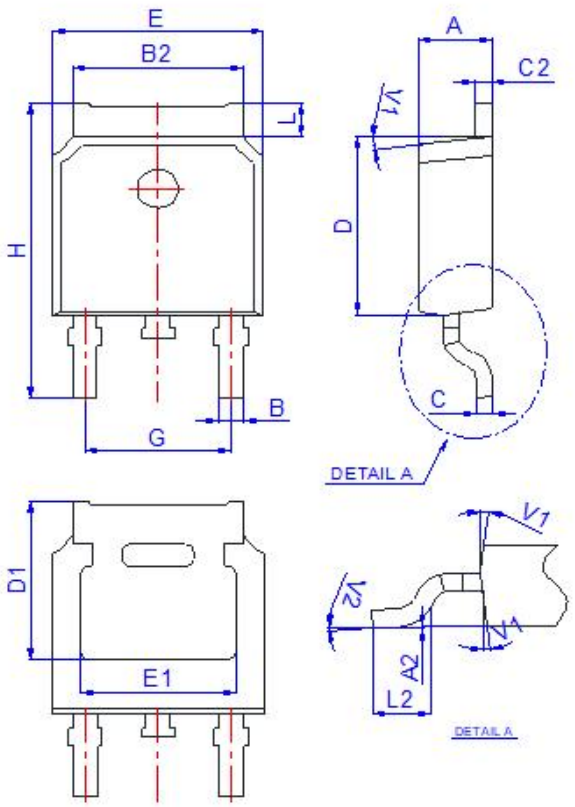

Ref.	Dimensions					
	Millimeters			Inches		
	Min.	Typ.	Max.	Min.	Typ.	Max.
A	2.10		2.50	0.083		0.098
A2	0		0.10	0		0.004
B	0.66		0.86	0.026		0.034
B2	5.18		5.48	0.202		0.216
C	0.40		0.60	0.016		0.024
C2	0.44		0.58	0.017		0.023
D	5.90		6.30	0.232		0.248
D1	5.30REF			0.209REF		
E	6.40		6.80	0.252		0.268
E1	4.63			0.182		
G	4.47		4.67	0.176		0.184
H	9.50		10.70	0.374		0.421
L	1.09		1.21	0.043		0.048
L2	1.35		1.65	0.053		0.065
V1		7°			7°	
V2	0°		6°	0°		6°