EVM User's Guide: TPS62A01-Q1 TPS62A01A-Q1 TPS62A01QEVM-270 TPS62A01AQEVM-270

TPS62A01-Q1 and TPS62A01A-Q1 Buck Converter Evaluation Module

Description

The TPS62A01-Q1 and TPS62A01A-Q1 are automotive synchronous step-down buck DC-DC converters optimized for high efficiency and compact solution-size. The TPS62A01-Q1 and TPS62A01A-Q1 delivers an output current up to 1-A. The TPS62A01A-Q1 variant operates in forced PWM mode (FPWM) across the whole load current range. The TPS62A01QEVM-270 and TPS62A01AQEVM-270 are available in a 1.6-mm × 1.6-mm SOT563 package.

Get Started

1. Order the EVM on ti.com.
2. Download the data sheet (SLUSF67).
3. Use the data sheet to adjust the BOM with the device for desired output voltage.

Features

- Input voltage range 0.5-V to 5.5-V
- Adjustable output voltage range 0.6-V to V_{IN}
- 100% mode operation
- Quiescent current < 25-µA
- Feedback accuracy 1.5%(-40°C to 150°C)
- Switching frequency 2.4-MHz (PWM)
- Power save mode or PWM option available

Applications

- Front camera
- Surround view system ECU
- Automotive cluster display

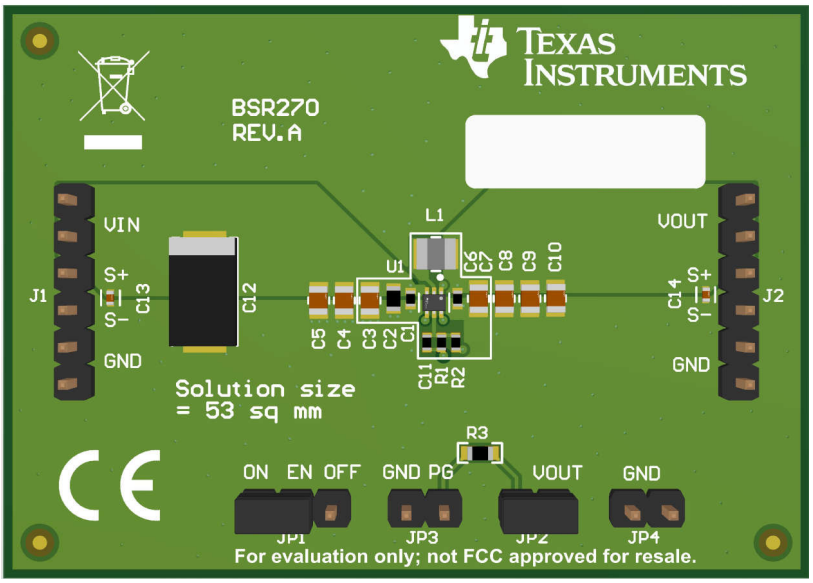

TPS62A01QEVM-27

Copyright © 2023 Texas Instruments Incorporated

1 Evaluation Module Overview

1.1 Introduction

These EVMs are designed to help the user easily evaluate and test the operation and functionality of the TPS62A01-Q1 and TPS62A01A-Q1 buck converters. EVMs convert a 2.5-V to 5.5-V input voltage to a regulated 1.8-V output voltage that delivers up to 1-A maximum. This user's guide describes the characteristics, operation, and use of TI's TPS62A01-Q1 and TPS62A01A-Q1 evaluation modules (EVM). The document includes setup instructions for the following:

- Hardware
- A printed-circuit board (PCB) layout
- Schematic diagram
- Bill of materials (BOM)

Throughout this document, the TPS62A01xQEVM-270 is used as an abbreviation representing the TPS62A01QEVM-270 (001) and TPS62A01AQEVM-270 (002).

1.2 Kit Contents

Table 1-1. TPS62A01QEVM-270 and TPS62A01AEVM-270 Kit Contents

Item	Description	Quantity
TPS62A01QEVM-270	PCB	1
TPS62A01AQEVM-270	PCB	1

1.3 Specification

Table 1-2. Performance Specification Summary

Specification	Test Conditions	MIN	TYP	MAX	Unit
Input voltage		2.5		5.5	V
Output voltage			1.8		V
Output current	TPS62A01QEVM-270	0		1	A
	TPS62A01AQEVM-270	0		1	A

1.4 Device Information

The PCB for this EVM is designed to accommodate the adjustable voltage version of this IC. On the EVM, desired output voltage can be set by adjusting the resistor divider branch with the feedback pin. Additional input and output capacitors can also be added. TPS62A01A-Q1 operates in FPWM while TPS62A01-Q1 operates in the PFM/PWM. The switching frequency of the device in FPWM mode is 2.4-MHz.

Copyright © 2023 Texas Instruments Incorporated

2 Hardware

2.1 Setup

This section describes how to properly use the TPS62A01QEVM-270 and TPS62A01AQEVM-270.

2.1.1 Connector Descriptions

J1, Pin 1 and 2 – VIN	Positive input voltage connection from the input supply for the EVM
J1, Pin 3 and 4 – S+/S–	Input voltage sense connections, measure the input voltage at this point
J1, Pin 5 and 6 – GND	Input return connection from the input supply for the EVM
J2, Pin 1 and 2 – VOUT	Positive output voltage connection
J2, Pin 3 and 4 – S+/S–	Output voltage sense connections, measure the output voltage at this point
J2, Pin 5 and 6 – GND	Output return connection
JP3 – PG/GND	The PG output appears on pin 1 of this header with a convenient ground on pin 2.
JP1 – EN	EN pin jumper. Place the supplied jumper across ON and EN to turn on the IC. Place the jumper across OFF and EN to turn off the IC.
JP2 – PG Pullup Voltage	PG pin pullup voltage jumper. Place the supplied jumper on JP2 to connect the PG pin pullup resistor to the output voltage. Alternatively, the jumper can be removed and a different voltage can be supplied on pin 1 to pull up the PG pin to a different level. This externally applied voltage must remain below 5.5 V.

2.1.2 Hardware Setup

To operate the EVM, set jumper JP1 to the desired positions per Connector Descriptions. Connect the input supply to J1 and connect the load to J2.

2.2 Modifications

The printed-circuit board (PCB) for this EVM is designed to accommodate some modifications by the user. Additional input and output capacitors or a feedforward capacitor according to the output voltage can be added. Also, the output voltage can be changed with the help of resistor divider.

2.2.1 Input and Output Capacitors

C4, C5 is provided for an additional input capacitor. This capacitor is not required for proper operation but can be used to reduce the input voltage ripple.

C8, C9, and C10 are provided for additional output capacitors. These capacitors are not required for proper operation but can be used to reduce the output voltage ripple and to improve the load transient response. The output capacitance must remain within the recommended range in the device data sheet for proper operation.

C13 and C14 are present between the sense line lines of input supply and output load. It can be used for better EMI performance.

2.2.2 Feedforward Capacitor

C11 is the feedforward capacitor. This EVM has a feedforward capacitor of 33 pF. TI recommends to check the requirements of feedforward capacitor in data sheet of the device according to adjusted output voltage.

Copyright © 2023 Texas Instruments Incorporated

3 Hardware Design Files

3.1 Schematic

Figure 3-1 illustrates the EVM schematic of TPS62A01QEVM-270, which is also valid for the TPS62A01AQEVM-270 variant.

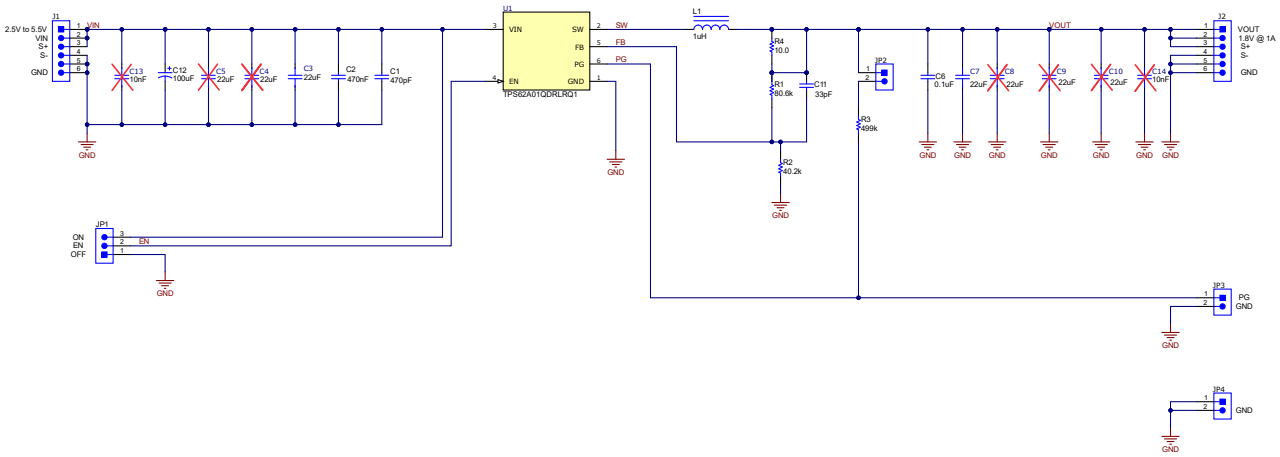

Figure 3-1. TPS62A01QEVM-270 Schematic

Copyright © 2023 Texas Instruments Incorporated

3.2 PCB Layouts

This section provides the board layout and illustrations of TPS62A01QEVM-270, which is also valid for the TPS62A01AQEVM-270 variant. TPS62A01QEVM is a 4 layer PCB.

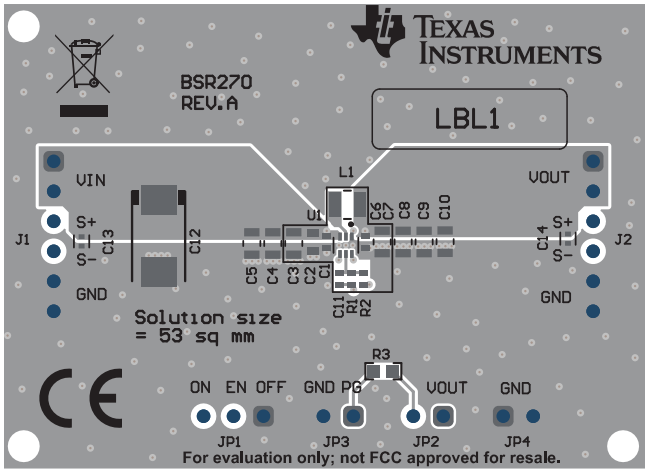

Figure 3-2. Top View Mask

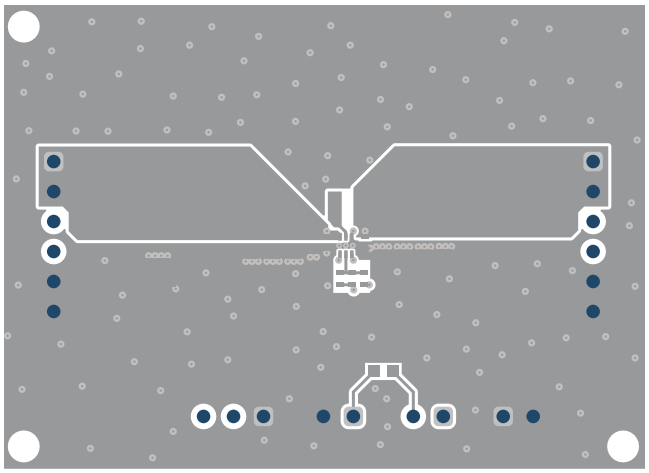

Figure 3-3. Top Layer

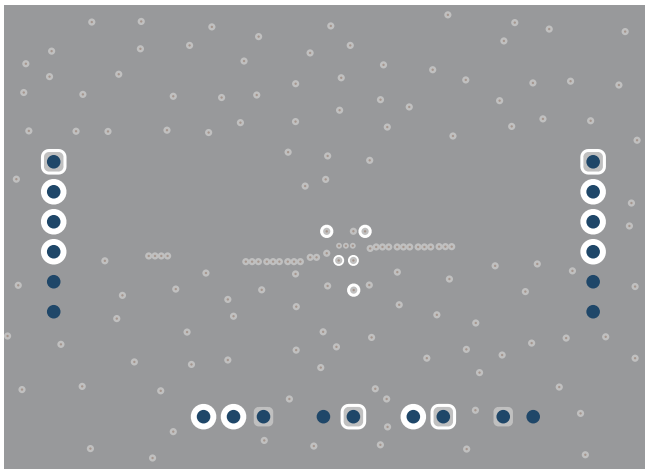

Figure 3-4. Signal Layer 1

Copyright © 2023 Texas Instruments Incorporated

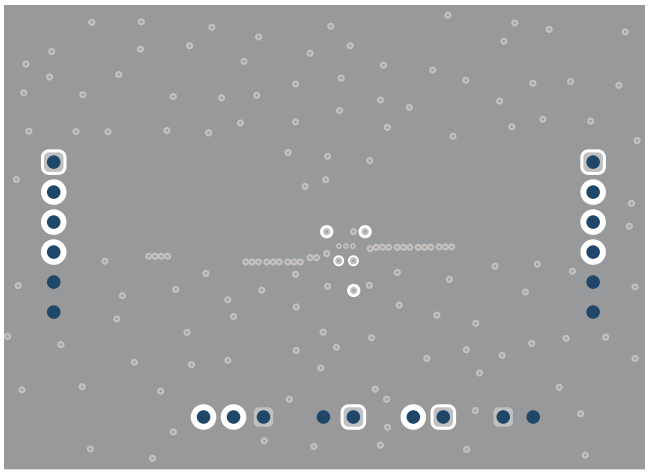

Figure 3-5. Signal Layer 2

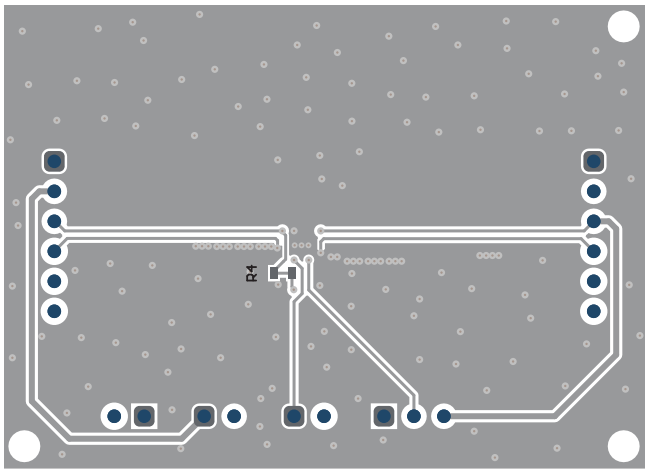

Figure 3-6. Bottom Layer

Copyright © 2023 Texas Instruments Incorporated

3.3 Bill of Materials (BOM)

Table 3-1 lists the bill of materials for this EVM.

Table 3-1. TPS62A01QEVM-270 and TPS62A01AQEVM-270 Bill of Materials

Quantity		Ref Des	Value	Description	Size	Part Number	MFR
TPS62A01QEVM-270	TPS62A01AQEVM-270						
1	1	C1	470 pF	Capacitor, Ceramic, 10 V, X7R, ±10%	0402	CGA2B2X7R1H471K050BA	TDK
1	1	C2	0.47uF	Capacitor, Ceramic, 10 V, X7R, ±10%	0603	GRM188R71C474KA88D	Murata
1	1	C3,C7	22uF	Capacitor, Ceramic, 10 V, X7R, ±20%	0805	GRT21BD71A226ME13L	Murata
1	1	C6	0.1uF	Capacitor, Ceramic, 50 V, X7R, ±10%	0402	C0402C104K4RACAUTO	Kemet
1	1	C11	33 pF	Capacitor, Ceramic, 50 V, X7R, ±10%	0402	GCM1555C1H330JA16D	Murata
1	1	C12	100uF	Capacitor, Tantalum Polymer, 20 V, ±20%	7.3x4.3mm	20TQC100MYF	Panasonic Electronic Components
1	1	L1	1 µH	Inductor, Shielded, 3.8 A, 0.0035 Ω	1008	DFE252012PD-1R0M	Murata Toko
1	1	R1	80.6 k	Resistor, Chip, 0.063 W, 1%	0402	Std	Std
1	1	R2	40.2 k	Resistor, Chip, 0.063 W, 1%	0402	Std	Std
1	1	R3	499 k	Resistor, Chip, 0.1 W, 1%	0603	Std	Std
1	1	R4	10	Resistor, Chip, 0.25W, 1%	0603	Std	Std
1	0	U1	TPS62A01Q	IC, 5.5-V, 1-A Step-Down Converter	1.6 ×1.6 mm	TPS62A01Q	TI
0	1	U1	TPS62A01AQ	IC, 5.5-V, 1-A Step-Down Converter with forced PWM operation	1.6 × 1.6 mm	TPS62A01AQ	TI

Copyright © 2023 Texas Instruments Incorporated

4 Additional Information

4.1 Trademarks

All trademarks are the property of their respective owners.

5 Related Documentation

The data sheet and other documentation of the device is available in the product folders of TPS62A01-Q1 and TPS62A01A-Q1.

Copyright © 2023 Texas Instruments Incorporated

STANDARD TERMS FOR EVALUATION MODULES

1. *Delivery:* TI delivers TI evaluation boards, kits, or modules, including any accompanying demonstration software, components, and/or documentation which may be provided together or separately (collectively, an “EVM” or “EVMs”) to the User (“User”) in accordance with the terms set forth herein. User's acceptance of the EVM is expressly subject to the following terms.

   1.1 EVMs are intended solely for product or software developers for use in a research and development setting to facilitate feasibility evaluation, experimentation, or scientific analysis of TI semiconductors products. EVMs have no direct function and are not finished products. EVMs shall not be directly or indirectly assembled as a part or subassembly in any finished product. For clarification, any software or software tools provided with the EVM (“Software”) shall not be subject to the terms and conditions set forth herein but rather shall be subject to the applicable terms that accompany such Software

   1.2 EVMs are not intended for consumer or household use. EVMs may not be sold, sublicensed, leased, rented, loaned, assigned, or otherwise distributed for commercial purposes by Users, in whole or in part, or used in any finished product or production system.

2 *Limited Warranty and Related Remedies/Disclaimers*:

   2.1 These terms do not apply to Software. The warranty, if any, for Software is covered in the applicable Software License Agreement.

   2.2 TI warrants that the TI EVM will conform to TI's published specifications for ninety (90) days after the date TI delivers such EVM to User. Notwithstanding the foregoing, TI shall not be liable for a nonconforming EVM if (a) the nonconformity was caused by neglect, misuse or mistreatment by an entity other than TI, including improper installation or testing, or for any EVMs that have been altered or modified in any way by an entity other than TI, (b) the nonconformity resulted from User's design, specifications or instructions for such EVMs or improper system design, or (c) User has not paid on time. Testing and other quality control techniques are used to the extent TI deems necessary. TI does not test all parameters of each EVM. User's claims against TI under this Section 2 are void if User fails to notify TI of any apparent defects in the EVMs within ten (10) business days after delivery, or of any hidden defects with ten (10) business days after the defect has been detected.

   2.3 TI's sole liability shall be at its option to repair or replace EVMs that fail to conform to the warranty set forth above, or credit User's account for such EVM. TI's liability under this warranty shall be limited to EVMs that are returned during the warranty period to the address designated by TI and that are determined by TI not to conform to such warranty. If TI elects to repair or replace such EVM, TI shall have a reasonable time to repair such EVM or provide replacements. Repaired EVMs shall be warranted for the remainder of the original warranty period. Replaced EVMs shall be warranted for a new full ninety (90) day warranty period.

WARNING

Evaluation Kits are intended solely for use by technically qualified, professional electronics experts who are familiar with the dangers and application risks associated with handling electrical mechanical components, systems, and subsystems.

User shall operate the Evaluation Kit within TI’s recommended guidelines and any applicable legal or environmental requirements as well as reasonable and customary safeguards. Failure to set up and/or operate the Evaluation Kit within TI’s recommended guidelines may result in personal injury or death or property damage. Proper set up entails following TI’s instructions for electrical ratings of interface circuits such as input, output and electrical loads.

NOTE:

EXPOSURE TO ELECTROSTATIC DISCHARGE (ESD) MAY CAUSE DEGREDATION OR FAILURE OF THE EVALUATION KIT; TI RECOMMENDS STORAGE OF THE EVALUATION KIT IN A PROTECTIVE ESD BAG.

3 *Regulatory Notices:*

3.1 *United States*

3.1.1 *Notice applicable to EVMs not FCC-Approved:*

FCC NOTICE: This kit is designed to allow product developers to evaluate electronic components, circuitry, or software associated with the kit to determine whether to incorporate such items in a finished product and software developers to write software applications for use with the end product. This kit is not a finished product and when assembled may not be resold or otherwise marketed unless all required FCC equipment authorizations are first obtained. Operation is subject to the condition that this product not cause harmful interference to licensed radio stations and that this product accept harmful interference. Unless the assembled kit is designed to operate under part 15, part 18 or part 95 of this chapter, the operator of the kit must operate under the authority of an FCC license holder or must secure an experimental authorization under part 5 of this chapter.

3.1.2 *For EVMs annotated as FCC – FEDERAL COMMUNICATIONS COMMISSION Part 15 Compliant:*

CAUTION

This device complies with part 15 of the FCC Rules. Operation is subject to the following two conditions: (1) This device may not cause harmful interference, and (2) this device must accept any interference received, including interference that may cause undesired operation.

Changes or modifications not expressly approved by the party responsible for compliance could void the user's authority to operate the equipment.

FCC Interference Statement for Class A EVM devices

NOTE: This equipment has been tested and found to comply with the limits for a Class A digital device, pursuant to part 15 of the FCC Rules. These limits are designed to provide reasonable protection against harmful interference when the equipment is operated in a commercial environment. This equipment generates, uses, and can radiate radio frequency energy and, if not installed and used in accordance with the instruction manual, may cause harmful interference to radio communications. Operation of this equipment in a residential area is likely to cause harmful interference in which case the user will be required to correct the interference at his own expense.

FCC Interference Statement for Class B EVM devices

NOTE: This equipment has been tested and found to comply with the limits for a Class B digital device, pursuant to part 15 of the FCC Rules. These limits are designed to provide reasonable protection against harmful interference in a residential installation. This equipment generates, uses and can radiate radio frequency energy and, if not installed and used in accordance with the instructions, may cause harmful interference to radio communications. However, there is no guarantee that interference will not occur in a particular installation. If this equipment does cause harmful interference to radio or television reception, which can be determined by turning the equipment off and on, the user is encouraged to try to correct the interference by one or more of the following measures:

- *Reorient or relocate the receiving antenna.*
- *Increase the separation between the equipment and receiver.*
- *Connect the equipment into an outlet on a circuit different from that to which the receiver is connected.*
- *Consult the dealer or an experienced radio/TV technician for help.*

3.2 *Canada*

3.2.1 *For EVMs issued with an Industry Canada Certificate of Conformance to RSS-210 or RSS-247*

Concerning EVMs Including Radio Transmitters:

This device complies with Industry Canada license-exempt RSSs. Operation is subject to the following two conditions:

(1) this device may not cause interference, and (2) this device must accept any interference, including interference that may cause undesired operation of the device.

Concernant les EVMs avec appareils radio:

Le présent appareil est conforme aux CNR d'Industrie Canada applicables aux appareils radio exempts de licence. L'exploitation est autorisée aux deux conditions suivantes: (1) l'appareil ne doit pas produire de brouillage, et (2) l'utilisateur de l'appareil doit accepter tout brouillage radioélectrique subi, même si le brouillage est susceptible d'en compromettre le fonctionnement.

Concerning EVMs Including Detachable Antennas:

Under Industry Canada regulations, this radio transmitter may only operate using an antenna of a type and maximum (or lesser) gain approved for the transmitter by Industry Canada. To reduce potential radio interference to other users, the antenna type and its gain should be so chosen that the equivalent isotropically radiated power (e.i.r.p.) is not more than that necessary for successful communication. This radio transmitter has been approved by Industry Canada to operate with the antenna types listed in the user guide with the maximum permissible gain and required antenna impedance for each antenna type indicated. Antenna types not included in this list, having a gain greater than the maximum gain indicated for that type, are strictly prohibited for use with this device.

Concernant les EVMs avec antennes détachables

Conformément à la réglementation d'Industrie Canada, le présent émetteur radio peut fonctionner avec une antenne d'un type et d'un gain maximal (ou inférieur) approuvé pour l'émetteur par Industrie Canada. Dans le but de réduire les risques de brouillage radioélectrique à l'intention des autres utilisateurs, il faut choisir le type d'antenne et son gain de sorte que la puissance isotrope rayonnée équivalente (p.i.r.e.) ne dépasse pas l'intensité nécessaire à l'établissement d'une communication satisfaisante. Le présent émetteur radio a été approuvé par Industrie Canada pour fonctionner avec les types d'antenne énumérés dans le manuel d'usage et ayant un gain admissible maximal et l'impédance requise pour chaque type d'antenne. Les types d'antenne non inclus dans cette liste, ou dont le gain est supérieur au gain maximal indiqué, sont strictement interdits pour l'exploitation de l'émetteur

3.3 *Japan*

3.3.1 *Notice for EVMs delivered in Japan:* Please see http://www.tij.co.jp/lsds/ti_ja/general/eStore/notice_01.page 日本国内に輸入される評価用キット、ボードについては、次のところをご覧ください。

https://www.ti.com/ja-jp/legal/notice-for-evaluation-kits-delivered-in-japan.html

3.3.2 *Notice for Users of EVMs Considered "Radio Frequency Products" in Japan:* EVMs entering Japan may not be certified by TI as conforming to Technical Regulations of Radio Law of Japan.

If User uses EVMs in Japan, not certified to Technical Regulations of Radio Law of Japan, User is required to follow the instructions set forth by Radio Law of Japan, which includes, but is not limited to, the instructions below with respect to EVMs (which for the avoidance of doubt are stated strictly for convenience and should be verified by User):

1. Use EVMs in a shielded room or any other test facility as defined in the notification #173 issued by Ministry of Internal Affairs and Communications on March 28, 2006, based on Sub-section 1.1 of Article 6 of the Ministry's Rule for Enforcement of Radio Law of Japan,
2. Use EVMs only after User obtains the license of Test Radio Station as provided in Radio Law of Japan with respect to EVMs, or
3. Use of EVMs only after User obtains the Technical Regulations Conformity Certification as provided in Radio Law of Japan with respect to EVMs. Also, do not transfer EVMs, unless User gives the same notice above to the transferee. Please note that if User does not follow the instructions above, User will be subject to penalties of Radio Law of Japan.

【無線電波を送信する製品の開発キットをお使いになる際の注意事項】 開発キットの中には技術基準適合証明を受けていないものがあります。 技術適合証明を受けていないもののご使用に際しては、電波法遵守のため、以下のいずれかの措置を取っていただく必要がありますのでご注意ください。

1. 電波法施行規則第6条第1項第1号に基づく平成18年3月28日総務省告示第173号で定められた電波暗室等の試験設備でご使用いただく。
2. 実験局の免許を取得後ご使用いただく。
3. 技術基準適合証明を取得後ご使用いただく。

なお、本製品は、上記の「ご使用にあたっての注意」を譲渡先、移転先に通知しない限り、譲渡、移転できないものとします。

上記を遵守頂けない場合は、電波法の罰則が適用される可能性があることをご留意ください。 日本テキサス・インスツルメンツ株式会社

東京都新宿区西新宿 6 丁目 2 4 番 1 号

西新宿三井ビル

3.3.3 *Notice for EVMs for Power Line Communication:* Please see http://www.tij.co.jp/lsds/ti_ja/general/eStore/notice_02.page

電力線搬送波通信についての開発キットをお使いになる際の注意事項については、次のところをご覧ください。https://www.ti.com/ja-jp/legal/notice-for-evaluation-kits-for-power-line-communication.html

3.4 *European Union*

3.4.1 *For EVMs subject to EU Directive 2014/30/EU (Electromagnetic Compatibility Directive)*:

This is a class A product intended for use in environments other than domestic environments that are connected to a low-voltage power-supply network that supplies buildings used for domestic purposes. In a domestic environment this product may cause radio interference in which case the user may be required to take adequate measures.

4 *EVM Use Restrictions and Warnings:*

4.1 EVMS ARE NOT FOR USE IN FUNCTIONAL SAFETY AND/OR SAFETY CRITICAL EVALUATIONS, INCLUDING BUT NOT LIMITED TO EVALUATIONS OF LIFE SUPPORT APPLICATIONS.

4.2 User must read and apply the user guide and other available documentation provided by TI regarding the EVM prior to handling or using the EVM, including without limitation any warning or restriction notices. The notices contain important safety information related to, for example, temperatures and voltages.

4.3 *Safety-Related Warnings and Restrictions:*

4.3.1 User shall operate the EVM within TI's recommended specifications and environmental considerations stated in the user guide, other available documentation provided by TI, and any other applicable requirements and employ reasonable and customary safeguards. Exceeding the specified performance ratings and specifications (including but not limited to input and output voltage, current, power, and environmental ranges) for the EVM may cause personal injury or death, or property damage. If there are questions concerning performance ratings and specifications, User should contact a TI field representative prior to connecting interface electronics including input power and intended loads. Any loads applied outside of the specified output range may also result in unintended and/or inaccurate operation and/or possible permanent damage to the EVM and/or interface electronics. Please consult the EVM user guide prior to connecting any load to the EVM output. If there is uncertainty as to the load specification, please contact a TI field representative. During normal operation, even with the inputs and outputs kept within the specified allowable ranges, some circuit components may have elevated case temperatures. These components include but are not limited to linear regulators, switching transistors, pass transistors, current sense resistors, and heat sinks, which can be identified using the information in the associated documentation. When working with the EVM, please be aware that the EVM may become very warm.

4.3.2 EVMs are intended solely for use by technically qualified, professional electronics experts who are familiar with the dangers and application risks associated with handling electrical mechanical components, systems, and subsystems. User assumes all responsibility and liability for proper and safe handling and use of the EVM by User or its employees, affiliates, contractors or designees. User assumes all responsibility and liability to ensure that any interfaces (electronic and/or mechanical) between the EVM and any human body are designed with suitable isolation and means to safely limit accessible leakage currents to minimize the risk of electrical shock hazard. User assumes all responsibility and liability for any improper or unsafe handling or use of the EVM by User or its employees, affiliates, contractors or designees.

4.4 User assumes all responsibility and liability to determine whether the EVM is subject to any applicable international, federal, state, or local laws and regulations related to User's handling and use of the EVM and, if applicable, User assumes all responsibility and liability for compliance in all respects with such laws and regulations. User assumes all responsibility and liability for proper disposal and recycling of the EVM consistent with all applicable international, federal, state, and local requirements.

5. *Accuracy of Information:* To the extent TI provides information on the availability and function of EVMs, TI attempts to be as accurate as possible. However, TI does not warrant the accuracy of EVM descriptions, EVM availability or other information on its websites as accurate, complete, reliable, current, or error-free.

6. *Disclaimers:*

6.1 EXCEPT AS SET FORTH ABOVE, EVMS AND ANY MATERIALS PROVIDED WITH THE EVM (INCLUDING, BUT NOT LIMITED TO, REFERENCE DESIGNS AND THE DESIGN OF THE EVM ITSELF) ARE PROVIDED "AS IS" AND "WITH ALL FAULTS." TI DISCLAIMS ALL OTHER WARRANTIES, EXPRESS OR IMPLIED, REGARDING SUCH ITEMS, INCLUDING BUT NOT LIMITED TO ANY EPIDEMIC FAILURE WARRANTY OR IMPLIED WARRANTIES OF MERCHANTABILITY OR FITNESS FOR A PARTICULAR PURPOSE OR NON-INFRINGEMENT OF ANY THIRD PARTY PATENTS, COPYRIGHTS, TRADE SECRETS OR OTHER INTELLECTUAL PROPERTY RIGHTS.

6.2 EXCEPT FOR THE LIMITED RIGHT TO USE THE EVM SET FORTH HEREIN, NOTHING IN THESE TERMS SHALL BE CONSTRUED AS GRANTING OR CONFERRING ANY RIGHTS BY LICENSE, PATENT, OR ANY OTHER INDUSTRIAL OR INTELLECTUAL PROPERTY RIGHT OF TI, ITS SUPPLIERS/LICENSORS OR ANY OTHER THIRD PARTY, TO USE THE EVM IN ANY FINISHED END-USER OR READY-TO-USE FINAL PRODUCT, OR FOR ANY INVENTION, DISCOVERY OR IMPROVEMENT, REGARDLESS OF WHEN MADE, CONCEIVED OR ACQUIRED.

7. *USER'S INDEMNITY OBLIGATIONS AND REPRESENTATIONS.* USER WILL DEFEND, INDEMNIFY AND HOLD TI, ITS LICENSORS AND THEIR REPRESENTATIVES HARMLESS FROM AND AGAINST ANY AND ALL CLAIMS, DAMAGES, LOSSES, EXPENSES, COSTS AND LIABILITIES (COLLECTIVELY, "CLAIMS") ARISING OUT OF OR IN CONNECTION WITH ANY HANDLING OR USE OF THE EVM THAT IS NOT IN ACCORDANCE WITH THESE TERMS. THIS OBLIGATION SHALL APPLY WHETHER CLAIMS ARISE UNDER STATUTE, REGULATION, OR THE LAW OF TORT, CONTRACT OR ANY OTHER LEGAL THEORY, AND EVEN IF THE EVM FAILS TO PERFORM AS DESCRIBED OR EXPECTED.

8. *Limitations on Damages and Liability:*

   8.1 *General Limitations*. IN NO EVENT SHALL TI BE LIABLE FOR ANY SPECIAL, COLLATERAL, INDIRECT, PUNITIVE, INCIDENTAL, CONSEQUENTIAL, OR EXEMPLARY DAMAGES IN CONNECTION WITH OR ARISING OUT OF THESE TERMS OR THE USE OF THE EVMS , REGARDLESS OF WHETHER TI HAS BEEN ADVISED OF THE POSSIBILITY OF SUCH DAMAGES. EXCLUDED DAMAGES INCLUDE, BUT ARE NOT LIMITED TO, COST OF REMOVAL OR REINSTALLATION, ANCILLARY COSTS TO THE PROCUREMENT OF SUBSTITUTE GOODS OR SERVICES, RETESTING, OUTSIDE COMPUTER TIME, LABOR COSTS, LOSS OF GOODWILL, LOSS OF PROFITS, LOSS OF SAVINGS, LOSS OF USE, LOSS OF DATA, OR BUSINESS INTERRUPTION. NO CLAIM, SUIT OR ACTION SHALL BE BROUGHT AGAINST TI MORE THAN TWELVE (12) MONTHS AFTER THE EVENT THAT GAVE RISE TO THE CAUSE OF ACTION HAS OCCURRED.

   8.2 *Specific Limitations.* IN NO EVENT SHALL TI'S AGGREGATE LIABILITY FROM ANY USE OF AN EVM PROVIDED HEREUNDER, INCLUDING FROM ANY WARRANTY, INDEMITY OR OTHER OBLIGATION ARISING OUT OF OR IN CONNECTION WITH THESE TERMS, , EXCEED THE TOTAL AMOUNT PAID TO TI BY USER FOR THE PARTICULAR EVM(S) AT ISSUE DURING THE PRIOR TWELVE (12) MONTHS WITH RESPECT TO WHICH LOSSES OR DAMAGES ARE CLAIMED. THE EXISTENCE OF MORE THAN ONE CLAIM SHALL NOT ENLARGE OR EXTEND THIS LIMIT.

9. *Return Policy.* Except as otherwise provided, TI does not offer any refunds, returns, or exchanges. Furthermore, no return of EVM(s) will be accepted if the package has been opened and no return of the EVM(s) will be accepted if they are damaged or otherwise not in a resalable condition. If User feels it has been incorrectly charged for the EVM(s) it ordered or that delivery violates the applicable order, User should contact TI. All refunds will be made in full within thirty (30) working days from the return of the components(s), excluding any postage or packaging costs.

10. *Governing Law:* These terms and conditions shall be governed by and interpreted in accordance with the laws of the State of Texas, without reference to conflict-of-laws principles. User agrees that non-exclusive jurisdiction for any dispute arising out of or relating to these terms and conditions lies within courts located in the State of Texas and consents to venue in Dallas County, Texas. Notwithstanding the foregoing, any judgment may be enforced in any United States or foreign court, and TI may seek injunctive relief in any United States or foreign court.

Mailing Address: Texas Instruments, Post Office Box 655303, Dallas, Texas 75265
Copyright © 2023, Texas Instruments Incorporated

IMPORTANT NOTICE AND DISCLAIMER

TI PROVIDES TECHNICAL AND RELIABILITY DATA (INCLUDING DATA SHEETS), DESIGN RESOURCES (INCLUDING REFERENCE DESIGNS), APPLICATION OR OTHER DESIGN ADVICE, WEB TOOLS, SAFETY INFORMATION, AND OTHER RESOURCES “AS IS” AND WITH ALL FAULTS, AND DISCLAIMS ALL WARRANTIES, EXPRESS AND IMPLIED, INCLUDING WITHOUT LIMITATION ANY IMPLIED WARRANTIES OF MERCHANTABILITY, FITNESS FOR A PARTICULAR PURPOSE OR NON-INFRINGEMENT OF THIRD PARTY INTELLECTUAL PROPERTY RIGHTS.

These resources are intended for skilled developers designing with TI products. You are solely responsible for (1) selecting the appropriate TI products for your application, (2) designing, validating and testing your application, and (3) ensuring your application meets applicable standards, and any other safety, security, regulatory or other requirements.

These resources are subject to change without notice. TI grants you permission to use these resources only for development of an application that uses the TI products described in the resource. Other reproduction and display of these resources is prohibited. No license is granted to any other TI intellectual property right or to any third party intellectual property right. TI disclaims responsibility for, and you will fully indemnify TI and its representatives against, any claims, damages, costs, losses, and liabilities arising out of your use of these resources.

TI’s products are provided subject to TI’s Terms of Sale or other applicable terms available either on ti.com or provided in conjunction with such TI products. TI’s provision of these resources does not expand or otherwise alter TI’s applicable warranties or warranty disclaimers for TI products.

TI objects to and rejects any additional or different terms you may have proposed.

Mailing Address: Texas Instruments, Post Office Box 655303, Dallas, Texas 75265
Copyright © 2023, Texas Instruments Incorporated

Unikeyic Electronics

Global Electronic Components Distributor

Click to view pricing, inventory, delivery, and lifecycle information:

Texas Instruments:

LM5110-2M/NOPB RI-I02-114B-01 SN74ACT3631-15PQ SN74ALS1640AN SN74ALS257AD TL074IDR TPS25200DRVR TVP5150AM1PBSR MSP430F5438AIPZR OPA643P UCC3752D TPS3809I50DBVR SN74ALVC244PWE4 SN74AS832BDW LM311PW OPA2330AIDRBT SN74ACT7807-20FN SN74ALS258ADR BQ25616RTWR ISO124U/1K TLV2451IDBVR INA228AIDGSR SN74AS1034ANSR THMC50DBQR TL750L12CP TPA005D14DCA TPS3307-25DGNR DRV8821DCA LM4050CEM3-5.0 TPS2835PWPR