T491 Automotive/Industrial Grade MnO_2

Overview

The KEMET T491, designed specifically for today's highly automated surface mount processes and equipment, is the leading choice for surface mount designs. The T491 combines KEMET's proven solid tantalum technology, acclaimed and respected throughout the world, with the latest in materials, processes, and automation, resulting in unsurpassed total performance and value. This product meets or exceeds the requirements of EIA standard 535BAAC. The physical outline and dimensions of T491 conform to this global standard. Low profile case sizes are available. This series is classified as moisture sensitivity level (MSL) 1 under J STD 020, with unlimited floor life time at ≤ 30°C / 85% RH. The T491 standard terminations are available in 100% matte tin and provide excellent wetting characteristics and compatibility with today's surface mount solder systems. Tin/lead (Sn/Pb) terminations are available upon request for any part number. Gold-plated terminations are also available for use with conductive epoxy attachment processes. The symmetrical terminations offer total compliancy to provide the thermal and mechanical stress relief required for today's technology. Standard packaging of these devices is Tape & Reel in accordance with EIA 481. This system provides perfect compatibility with all tape-fed placement units.

Benefits

- Meets or exceeds EIA standard 535BAAC
- Tape & Reel standard packaging per EIA 481
- Symmetrical, compliant terminations
- Optional gold-plated terminations
- Laser-marked case
- 100% surge current test
- Extended range values
- Low profile case sizes

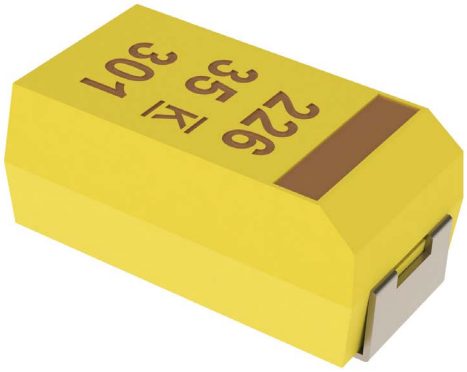

Applications

Typical applications include decoupling and filtering in automotive end applications such as DC/DC converters, portable electronics, telecommunications, and control units.

Environmental Compliance

RoHS compliant (6/6) according to Directive 2002/95/EC when ordered with 100% Sn solder, Gold-plated or Non-magnetic 100% Sn solder.

- Halogen-free
- Epoxy compliant with UL94 V-0
- Molded Epoxy complies for outgassing testing under ASTM E 595.

© KEMET Electronics Corporation • One East Broward Boulevard
Fort Lauderdale, FL 33301 USA • 954-766-2800 • www.kemet.com

K-SIM

For a detailed analysis of specific part numbers, please visit ksim.kemet.com to access KEMET's K-SIM software. KEMET K-SIM is designed to simulate behavior of components with respect to frequency, ambient temperature, and DC bias levels.

Ordering Information

T	491	X	157	K	020	A	T	AUTO	
Capacitor Class	Series	Case Size	Capacitance Code (pF)	Capacitance Tolerance	Rated Voltage (VDC)	Failure Rate/ Design	Termination Finish	C-Spec 1	Packaging (C-Spec)
T = Tantalum	Industrial	A B C D E S T U V X	First two digits represent significant figures. Third digit specifies number of zeros.	K = ±10% M = ±20%	2R5 = 2.5 003 = 3 004 = 4 006 = 6.3 010 = 10 016 = 16 020 = 20 025 = 25 035 = 35 050 = 50	A = N/A	T = 100% Matte tin (Sn)-plated H = Standard solder coated (SnPb 5% Pb minimum) G = Gold-plated (A, B, C, D, X only) N = Non-magnetic 100% tin (Sn) M = Non-magnetic (SnPb)	AUTO = Automotive grade AUTO = AEC–Q200 certification	Blank = 7" reel 7280 = 13" reel

Performance Characteristics

Item	Performance Characteristics
Operating Temperature	–55°C to 125°C
Rated Capacitance Range	0.1 – 470 µF at 120 Hz/25°C
Capacitance Tolerance	K tolerance (10%), M tolerance (20%)
Rated Voltage Range	4 – 50 V
DF (120 Hz)	Refer to Part Number Electrical Specification Table
ESR (100 kHz)	Refer to Part Number Electrical Specification Table
Leakage Current	≤ 0.01 CV (µA) at rated voltage after 5 minutes

Qualification

Test	Condition		Characteristics			
Endurance	85°C at rated voltage, 2,000 hours 125°C at 2/3 rated voltage, 2,000 hours		Δ C/C	Within ±10% of initial value		
			DF	Within initial limits		
			DCL	Within 1.25 x initial limit		
			ESR	Within initial limits		
Storage Life	125°C at 0 volts, 2,000 hours		Δ C/C	Within ±10% of initial value		
			DF	Within initial limits		
			DCL	Within 1.25 x initial limit		
			ESR	Within initial limits		
Thermal Shock	MIL–STD–202, Method 107, Condition B, mounted, –55°C to 125° C, 1,000 cycles		Δ C/C	Within ±5% of initial value		
			DF	Within initial limits		
			DCL	Within 1.25 x initial limit		
			ESR	Within initial limits		
Temperature Stability	Extreme temperature exposure at a succession of continuous steps at +25°C, –55°C, +25°C, +85°C, +125°C, +25°C.			+25°C	–55°C	+85°C	+125°C
		Δ C/C		IL*	±10%	±10%	±20%
		DF		IL	IL	1.5 x IL	1.5 x IL
		DCL		IL	N/A	10 x IL	12 x IL
Surge Voltage	85°C, 1.32 x rated voltage 1,000 cycles (125°C, 1.2 x rated voltage).		Δ C/C	Within ±5% of initial value		
			DF	Within initial limits		
			DCL	Within initial limits		
			ESR	Within initial limits		
Mechanical Shock/ Vibration	MIL–STD–202, Method 213, Condition I, 100 G peak MIL–STD–202, Method 204, Condition D, 10 Hz to 2,000 Hz, 20 G peak		Δ C/C	Within ±10% of initial value		
			DF	Within initial limits		
			DCL	Within initial limits		

**IL = Initial limit*

Certification

KEMET's Internal Qualification Plan for this Tantalum series of capacitors follows AEC–Q200 guidelines. Standard catalog part types ordered without a specific automotive designator, i.e., suffix AUTO or four digit customer specific designator (C-Spec), are not considered KEMET automotive grade tantalum capacitors.

Electrical Characteristics

ESR vs. Frequency

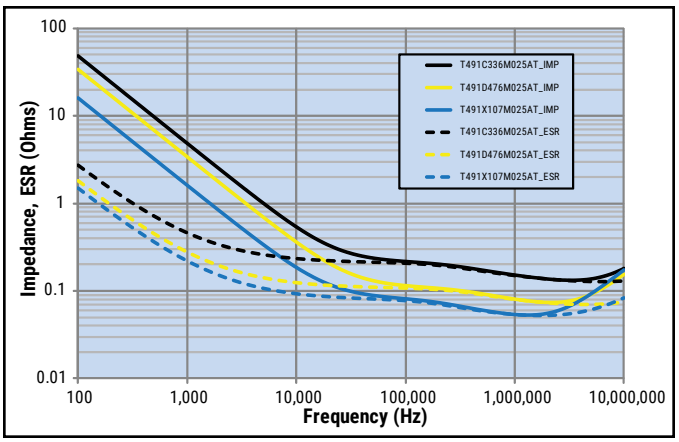

Capacitance vs. Frequency

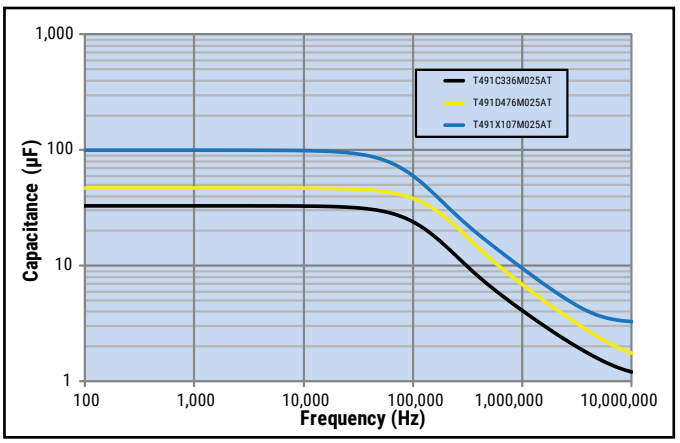

Dimensions – Millimeters (Inches)

Metric will govern

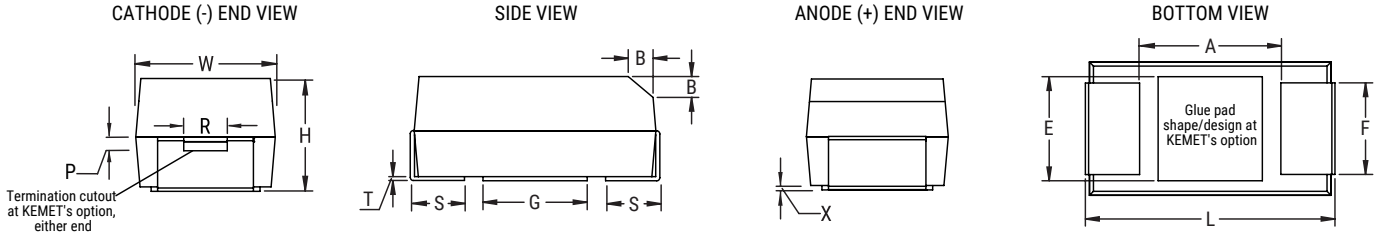

Case Size		Component												
KEMET	EIA	L	W	H	F ±0.1 ±(0.004)	S	B ±0.15 (Ref) ±0.006	X (Ref)	P (Ref)	R (Ref)	T (Ref)	A (Min)	G (Ref)	E (Ref)
A	3216–18	3.2±0.2 (0.126±0.008)	1.6±0.2 (0.063±0.008)	1.6±0.2 (0.063±0.008)	1.2 (0.047)	0.80 (0.032) +0.2 (0.008)/−0.3(0.011)	0.4 (0.016)	0.10±0.10 (0.004±0.004)	0.4 (0.016)	0.4 (0.016)	0.13 (0.005)	1.2 (0.047)	1.1 (0.043)	1.3 (0.051)
B	3528–21	3.5±0.2 (0.138±0.008)	2.8±0.2 (0.110±0.008)	1.9±0.2 (0.075±0.008)	2.2 (0.087)	0.80 (0.032) +0.1 (0.004)/−0.3(0.011)	0.4 (0.016)	0.10±0.10 (0.004±0.004)	0.5 (0.020)	1.0 (0.039)	0.13 (0.005)	1.9 (0.075)	1.8 (0.071)	2.2 (0.087)
C	6032–28	6.0±0.3 (0.236±0.012)	3.2±0.3 (0.126±0.012)	2.5±0.3 (0.098±0.012)	2.2 (0.087)	1.30 (0.051) ±0.3 (0.011)	0.5 (0.020)	0.10±0.10 (0.004±0.004)	0.9 (0.035)	1.0 (0.039)	0.13 (0.005)	2.9 (0.114)	2.8 (0.110)	2.4 (0.094)
D	7343–31	7.3±0.3 (0.287±0.012)	4.3±0.3 (0.169±0.012)	2.8±0.3 (0.110±0.012)	2.4 (0.094)	1.30 (0.051) ±0.3 (0.011)	0.5 (0.020)	0.10±0.10 (0.004±0.004)	0.9 (0.035)	1.0 (0.039)	0.13 (0.005)	3.6 (0.142)	3.5 (0.138)	3.5 (0.138)
X	7343–43	7.3±0.3 (0.287±0.012)	4.3±0.3 (0.169±0.012)	4.0±0.3 (0.157±0.012)	2.4 (0.094)	1.30 (0.051) ±0.3 (0.011)	0.5 (0.020)	0.10±0.10 (0.004±0.004)	1.7 (0.067)	1.0 (0.039)	0.13 (0.005)	3.6 (0.142)	3.5 (0.138)	3.5 (0.138)
E	7360-38	7.3±0.3 (0.287±0.012)	6.0±0.3 (0.236±0.012)	3.6±0.2 (0.142±0.008)	4.1 (0.161)	1.30 (0.051) ±0.3 (0.011)	0.5 (0.020)	0.10±0.10 (0.004±0.004)	N/A	N/A	0.13 (0.005)	3.6 (0.142)	3.5 (0.138)	3.5 (0.138)
V	7343-20	7.3±0.3 (0.287±0.012)	4.3±0.3 (0.169±0.012)	1.8 ±0.2 (0.071 ± 0.008)	2.4 (0.094)	1.30 (0.051) ±0.3 (0.011)	N/A	0.05 (0.002)	N/A	N/A	0.13 (0.005)	3.6 (0.142)	3.5 (0.138)	3.5 (0.138)

Notes: (Ref) – Dimensions provided for reference only. For low profile cases, no dimensions are provided for B, P or R because these cases do not have a bevel or a notch.

Table 1 – Ratings & Part Number Reference

Rated Voltage	Rated Cap	Case Code/ Case Size	KEMET Part Number	DC Leakage	DF	ESR	Ripple Current	Maximum Operating Temp
VDC at 85°C	µF	KEMET/EIA	(See below for part options)	µA +25°C Maximum/5 Min	% at +25°C 120 Hz Maximum	Ω at 25°C 100 kHz Maximum	(mA) 100 kHz, 25°C	°C
4	4.7	A/3216-18	T491A475(1)004A(2)AUTO	0.5	6	8	97	125
4	10	A/3216-18	T491A106(1)004A(2)AUTO	0.5	6	4.5	129	125
4	33	B/3528-21	T491B336(1)004A(2)AUTO	1.3	6	2.5	184	125
4	47	A/3216-18	T491A476(1)004A(2)AUTO	1.9	10	2.5	173	125
4	47	C/6032-28	T491C476(1)004A(2)AUTO	1.9	6	1.6	262	125
4	68	C/6032-28	T491C686(1)004A(2)AUTO	2.7	6	1.5	271	125
4	100	A/3216-18	T491A107M004A(2)AUTO	4.0	30	4.0	137	125
4	150	A/3216-18	T491A157(1)004A(2)AUTO	6.0	12	2.0	194	125
6.3	2.2	A/3216-18	T491A225(1)006A(2)AUTO	0.5	6	8	97	125
6.3	3.3	A/3216-18	T491A335(1)006A(2)AUTO	0.5	6	7	104	125
6.3	4.7	A/3216-18	T491A475(1)006A(2)AUTO	0.5	6	5.5	117	125
6.3	6.8	A/3216-18	T491A685(1)006A(2)AUTO	0.5	6	6.0	112	125
6.3	6.8	B/3528-21	T491B685(1)006A(2)AUTO	0.5	6	3.5	156	125
6.3	10	A/3216-18	T491A106(1)006A(2)AUTO	0.6	6	4	137	125
6.3	10	B/3528-21	T491B106(1)006A(2)AUTO	0.6	6	3.5	156	125
6.3	15	A/3216-18	T491A156(1)006A(2)AUTO	0.9	6	3.5	146	125
6.3	15	B/3528-21	T491B156(1)006A(2)AUTO	0.9	6	3	168	125
6.3	15	C/6032-28	T491C156(1)006A(2)AUTO	0.9	6	1.8	247	125
6.3	22	A/3216-18	T491A226(1)006A(2)AUTO	1.4	6	4	137	125
6.3	22	B/3528-21	T491B226(1)006A(2)AUTO	1.4	6	2.5	184	125
6.3	22	C/6032-28	T491C226(1)006A(2)AUTO	1.4	6	1.8	247	125
6.3	33	A/3216-18	T491A336(1)006A(2)AUTO	2.1	12	2.5	173	125
6.3	33	B/3528-21	T491B336(1)006A(2)AUTO	2.1	6	2.2	197	125
6.3	33	C/6032-28	T491C336(1)006A(2)AUTO	2.1	6	1.6	262	125
6.3	47	A/3216-18	T491A476(M)006A(2)AUTO	3.0	12	3.5	146	125
6.3	47	B/3528-21	T491B476(1)006A(2)AUTO	3.0	6	2	206	125
6.3	47	C/6032-28	T491C476(1)006A(2)AUTO	3.0	6	1.5	271	125
6.3	47	D/7343-31	T491D476(1)006A(2)AUTO	3.0	6	0.8	433	125
6.3	68	A/3216-18	T491A686(1)006A(2)AUTO	4.3	30	4	137	125
6.3	68	B/3528-21	T491B686(1)006A(2)AUTO	4.3	8	0.9	307	125
6.3	68	C/6032-28	T491C686(1)006A(2)AUTO	4.3	6	1.2	303	125
6.3	68	D/7343-31	T491D686(1)006A(2)AUTO	4.3	6	0.8	433	125
6.3	100	B/3528-21	T491B107(1)006A(2)AUTO	6.3	15	3.0	168	125
6.3	100	C/6032-28	T491C107(1)006A(2)AUTO	6.3	8	0.9	350	125
6.3	100	D/7343-31	T491D107(1)006A(2)AUTO	6.3	8	0.8	433	125
6.3	150	C/6032-28	T491C157(1)006A(2)AUTO	9.5	8	1.2	303	125
6.3	150	D/7343-31	T491D157(1)006A(2)AUTO	9.5	8	0.7	463	125
6.3	220	C/6032-28	T491C227(1)006A(2)AUTO	14	10	1	332	125
6.3	220	D/7343-31	T491D227(1)006A(2)AUTO	14	8	0.7	463	125
6.3	220	X/7343-43	T491X227(1)006A(2)AUTO	14	8	0.7	486	125
6.3	330	D/7343-31	T491D337(1)006A(2)AUTO	20.8	8	0.4	612	125
6.3	330	X/7343-43	T491X337(1)006A(2)AUTO	20.8	8	0.4	642	125
6.3	330	E/7360-38	T491E337(1)006A(2)AUTO	20.8	8	0.5	632	125
6.3	470	X/7343-43	T491X477(1)006A(2)AUTO	29.6	10	0.4	642	125
6.3	470	E/7360-38	T491E477(1)006A(2)AUTO	29.6	10	0.4	707	125
10	1	A/3216-18	T491A105(1)010A(2)AUTO	0.5	4	10	87	125
10	1.5	A/3216-18	T491A155(1)010A(2)AUTO	0.5	6	8	97	125
10	2.2	A/3216-18	T491A225(1)010A(2)AUTO	0.5	6	7	104	125
VDC at 85°C	µF	KEMET/EIA	(See below for part options)	µA +25°C Maximum/5 Min	% at +25°C 120 Hz Maximum	Ω at 25°C 100 kHz Maximum	(mA) 100 kHz, 25°C	°C
Rated Voltage	Rated Cap	Case Code/ Case Size	KEMET Part Number	DC Leakage	DF	ESR	Ripple Current	Maximum Operating Temp

(1) To complete KEMET part number, insert M for ±20% or K for ±10%. Designates Capacitance tolerance.
(2) To complete KEMET part number, insert T = 100% Matte Tin (Sn)-plated, G = Gold-plated, H = Standard Solder coated (SnPb 5% Pb minimum), N = Non-Magnetic 100% Tin (Sn), M = Non-Magnetic (SnPb). Designates Termination Finish.
Refer to Ordering Information for additional detail.
Higher voltage ratings and tighter tolerance product including ESR may be substituted within the same size at KEMET's option. Voltage substitution will be marked with the higher voltage rating. Substitutions can include better than series.

Table 1 – Ratings & Part Number Reference cont.

Rated Voltage	Rated Cap	Case Code/ Case Size	KEMET Part Number	DC Leakage	DF	ESR	Ripple Current	Maximum Operating Temp
VDC at 85°C	µF	KEMET/EIA	(See below for part options)	µA +25°C Maximum/5 Min	% at +25°C 120 Hz Maximum	Ω at 25°C 100 kHz Maximum	(mA) 100 kHz, 25°C	°C
10	2.2	B/3528-21	T491B225(1)010A(2)AUTO	0.5	6	3.5	156	125
10	3.3	A/3216-18	T491A335(1)010A(2)AUTO	0.5	6	5.5	117	125
10	4.7	A/3216-18	T491A475(1)010A(2)AUTO	0.5	6	5.0	122	125
10	4.7	B/3528-21	T491B475(1)010A(2)AUTO	0.5	6	3.5	156	125
10	6.8	A/3216-18	T491A685(1)010A(2)AUTO	0.7	6	4	137	125
10	6.8	B/3528-21	T491B685(1)010A(2)AUTO	0.7	6	3.5	156	125
10	10	A/3216-18	T491A106(1)010A(2)AUTO	1.0	6	3.8	140	125
10	10	B/3528-21	T491B106(1)010A(2)AUTO	1.0	6	3	168	125
10	10	C/6032-28	T491C106(1)010A(2)AUTO	1.0	6	1.8	247	125
10	15	A/3216-18	T491A156(1)010A(2)AUTO	1.5	8	6	112	125
10	15	B/3528-21	T491B156(1)010A(2)AUTO	1.5	6	2.5	184	125
10	15	C/6032-28	T491C156(1)010A(2)AUTO	1.5	6	1.8	247	125
10	22	A/3216-18	T491A226(1)010A(2)AUTO	2.2	8	3.2	153	125
10	22	B/3528-21	T491B226(1)010A(2)AUTO	2.2	6	2.3	192	125
10	22	C/6032-28	T491C226(1)010A(2)AUTO	2.2	6	1.6	262	125
10	33	B/3528-21	T491B336(1)010A(2)AUTO	3.3	6	1.8	217	125
10	33	C/6032-28	T491C336(1)010A(2)AUTO	3.3	6	1.5	271	125
10	33	D/7343-31	T491D336(1)010A(2)AUTO	3.3	6	0.8	433	125
10	47	B/3528-21	T491B476(1)010A(2)AUTO	4.7	8	1	292	125
10	47	C/6032-28	T491C476(1)010A(2)AUTO	4.7	6	1.2	303	125
10	47	D/7343-31	T491D476(1)010A(2)AUTO	4.7	6	0.8	433	125
10	68	B/3528-21	T491B686(1)010A(2)AUTO	6.8	8	1.0	292	125
10	68	C/6032-28	T491C686(1)010A(2)AUTO	6.8	6	1.2	303	125
10	68	D/7343-31	T491D686(1)010A(2)AUTO	6.8	6	0.8	433	125
10	100	B/3528-21	T491B107(1)010A(2)AUTO	10.0	15	1.2	266	125
10	100	C/6032-28	T491C107(1)010A(2)AUTO	10.0	8	1.2	303	125
10	100	D/7343-31	T491D107(1)010A(2)AUTO	10.0	8	0.7	463	125
10	150	C/6032-28	T491C157(1)010A(2)AUTO	15.0	10	0.9	350	125
10	150	D/7343-31	T491D157(1)010A(2)AUTO	15.0	8	0.7	463	125
10	150	X/7343-43	T491X157(1)010A(2)AUTO	15.0	8	0.7	486	125
10	220	D/7343-31	T491D227(1)010A(2)AUTO	22.0	8	0.5	548	125
10	220	X/7343-43	T491X227(1)010A(2)AUTO	22.0	8	0.5	574	125
10	330	D/7343-31	T491D337(1)010A(2)AUTO	33	10	0.5	548	125
10	330	X/7343-43	T491X337(1)010A(2)AUTO	33	10	0.5	574	125
10	330	E/7360-38	T491E337(1)010A(2)AUTO	33	10	0.5	632	125
10	470	X/7343-43	T491X477(1)010A(2)AUTO	47	10	0.2	908	125
16	1	A/3216-18	T491A105(1)016A(2)AUTO	0.5	4	10	87	125
16	1.5	A/3216-18	T491A155(1)016A(2)AUTO	0.5	6	8	97	125
16	2.2	A/3216-18	T491A225(1)016A(2)AUTO	0.5	6	6	112	125
16	3.3	A/3216-18	T491A335(1)016A(2)AUTO	0.5	6	5	122	125
16	3.3	B/3528-21	T491B335(1)016A(2)AUTO	0.5	6	3.5	156	125
16	4.7	A/3216-18	T491A475(1)016A(2)AUTO	0.8	6	4	137	125
16	4.7	B/3528-21	T491B475(1)016A(2)AUTO	0.8	6	3.5	156	125
16	4.7	C/6032-28	T491C475(1)016A(2)AUTO	0.8	6	2.4	214	125
16	6.8	A/3216-18	T491A685(1)016A(2)AUTO	1.1	6	3.5	146	125
16	6.8	B/3528-21	T491B685(1)016A(2)AUTO	1.1	6	2.5	184	125
16	6.8	C/6032-28	T491C685(1)016A(2)AUTO	1.1	6	1.9	241	125
16	10	A/3216-18	T491A106(1)016A(2)AUTO	1.6	8	7	104	125
VDC at 85°C	µF	KEMET/EIA	(See below for part options)	µA +25°C Maximum/5 Min	% at +25°C 120 Hz Maximum	Ω at 25°C 100 kHz Maximum	(mA) 100 kHz, 25°C	°C
Rated Voltage	Rated Cap	Case Code/ Case Size	KEMET Part Number	DC Leakage	DF	ESR	Ripple Current	Maximum Operating Temp

(1) To complete KEMET part number, insert M for ±20% or K for ±10%. Designates Capacitance tolerance.
(2) To complete KEMET part number, insert T = 100% Matte Tin (Sn)-plated, G = Gold-plated, H = Standard Solder coated (SnPb 5% Pb minimum), N = Non-Magnetic 100% Tin (Sn), M = Non-Magnetic (SnPb). Designates Termination Finish.
Refer to Ordering Information for additional detail.
Higher voltage ratings and tighter tolerance product including ESR may be substituted within the same size at KEMET's option. Voltage substitution will be marked with the higher voltage rating. Substitutions can include better than series.

Table 1 – Ratings & Part Number Reference cont.

Rated Voltage	Rated Cap	Case Code/ Case Size	KEMET Part Number	DC Leakage	DF	ESR	Ripple Current	Maximum Operating Temp
VDC at 85°C	µF	KEMET/EIA	(See below for part options)	µA +25°C Maximum/5 Min	% at +25°C 120 Hz Maximum	Ω at 25°C 100 kHz Maximum	(mA) 100 kHz, 25°C	°C
16	10	B/3528-21	T491B106(1)016A(2)AUTO	1.6	6	2.5	184	125
16	10	C/6032-28	T491C106(1)016A(2)AUTO	1.6	6	1.8	247	125
16	15	B/3528-21	T491B156(1)016A(2)AUTO	2.4	6	2	206	125
16	15	C/6032-28	T491C156(1)016A(2)AUTO	2.4	6	1.6	262	125
16	22	B/3528-21	T491B226(1)016A(2)AUTO	3.5	6	2.2	197	125
16	22	C/6032-28	T491C226(1)016A(2)AUTO	3.5	6	1.5	271	125
16	22	D/7343-31	T491D226(1)016A(2)AUTO	3.5	6	0.8	433	125
16	33	B/3528-21	T491B336(1)016A(2)AUTO	5.3	6	2	206	125
16	33	C/6032-28	T491C336(1)016A(2)AUTO	5.3	6	1.2	303	125
16	33	D/7343-31	T491D336(1)016A(2)AUTO	5.3	6	0.8	433	125
16	47	C/6032-28	T491C476(1)016A(2)AUTO	7.5	6	1.2	303	125
16	47	D/7343-31	T491D476(1)016A(2)AUTO	7.5	6	0.8	433	125
16	68	C/6032-28	T491C686(1)016A(2)AUTO	11	6	1	332	125
16	68	D/7343-31	T491D686(1)016A(2)AUTO	11	6	0.7	463	125
16	100	C/6032-28	T491C107(1)016A(2)AUTO	16.0	10	1.0	332	125
16	100	D/7343-31	T491D107(1)016A(2)AUTO	16.0	8	0.7	463	125
16	100	X/7343-43	T491X107(1)016A(2)AUTO	16.0	8	0.7	486	125
16	150	X/7343-43	T491X157(1)016A(2)AUTO	24.0	8	0.5	574	125
20	0.68	A/3216-18	T491A684(1)020A(2)AUTO	0.5	4	12	79	125
20	1	A/3216-18	T491A105(1)020A(2)AUTO	0.5	4	9	91	125
20	1.5	A/3216-18	T491A155(1)020A(2)AUTO	0.5	6	6.5	107	125
20	2.2	A/3216-18	T491A225(1)020A(2)AUTO	0.5	6	6	112	125
20	2.2	B/3528-21	T491B225(1)020A(2)AUTO	0.5	6	3.5	156	125
20	3.3	A/3216-18	T491A335(1)020A(2)AUTO	0.7	6	4	137	125
20	3.3	B/3528-21	T491B335(1)020A(2)AUTO	0.7	6	3	168	125
20	4.7	A/3216-18	T491A475(1)020A(2)AUTO	0.9	6	4	137	125
20	4.7	B/3528-21	T491B475(1)020A(2)AUTO	0.9	6	3	168	125
20	4.7	C/6032-28	T491C475(1)020A(2)AUTO	0.9	6	2.4	214	125
20	6.8	A/3216-18	T491A685(1)020A(2)AUTO	1.4	8	6	112	125
20	6.8	B/3528-21	T491B685(1)020A(2)AUTO	1.4	6	2.5	184	125
20	6.8	C/6032-28	T491C685(1)020A(2)AUTO	1.4	6	1.9	241	125
20	10	B/3528-21	T491B106(1)020A(2)AUTO	2.0	6	2	206	125
20	10	C/6032-28	T491C106(1)020A(2)AUTO	2.0	6	1.6	262	125
20	15	C/6032-28	T491C156(1)020A(2)AUTO	3.0	6	1.7	254	125
20	15	D/7343-31	T491D156(1)020A(2)AUTO	3.0	6	1	387	125
20	22	D/7343-31	T491D226(1)020A(2)AUTO	4.4	6	0.8	433	125
20	33	C/6032-28	T491C336(1)020A(2)AUTO	6.6	6	1.2	303	125
20	33	D/7343-31	T491D336(1)020A(2)AUTO	6.6	6	0.8	433	125
20	47	C/6032-28	T491C476(1)020A(2)AUTO	9.4	6	0.9	350	125
20	47	D/7343-31	T491D476(1)020A(2)AUTO	9.4	6	0.7	463	125
20	47	X/7343-43	T491X476(1)020A(2)AUTO	9.4	6	0.8	454	125
20	68	X/7343-43	T491X686(1)020A(2)AUTO	13.6	6	0.7	486	125
20	100	E/7360-38	T491E107(1)020A(2)AUTO	20.0	8	0.5	632	125
25	0.33	A/3216-18	T491A334(1)025A(2)AUTO	0.5	4	15	71	125
25	0.47	A/3216-18	T491A474(1)025A(2)AUTO	0.5	4	13	76	125
25	0.68	A/3216-18	T491A684(1)025A(2)AUTO	0.5	4	10	87	125
25	1	A/3216-18	T491A105(1)025A(2)AUTO	0.5	4	8	97	125
25	1	B/3528-21	T491B105(1)025A(2)AUTO	0.5	4	5	130	125
VDC at 85°C	µF	KEMET/EIA	(See below for part options)	µA +25°C Maximum/5 Min	% at +25°C 120 Hz Maximum	Ω at 25°C 100 kHz Maximum	(mA) 100 kHz, 25°C	°C
Rated Voltage	Rated Cap	Case Code/ Case Size	KEMET Part Number	DC Leakage	DF	ESR	Ripple Current	Maximum Operating Temp

(1) To complete KEMET part number, insert M for ±20% or K for ±10%. Designates Capacitance tolerance.
(2) To complete KEMET part number, insert T = 100% Matte Tin (Sn)-plated, G = Gold-plated, H = Standard Solder coated (SnPb 5% Pb minimum), N = Non-Magnetic 100% Tin (Sn), M = Non-Magnetic (SnPb). Designates Termination Finish.
Refer to Ordering Information for additional detail.
Higher voltage ratings and tighter tolerance product including ESR may be substituted within the same size at KEMET's option. Voltage substitution will be marked with the higher voltage rating. Substitutions can include better than series.

Table 1 – Ratings & Part Number Reference cont.

Rated Voltage	Rated Cap	Case Code/ Case Size	KEMET Part Number	DC Leakage	DF	ESR	Ripple Current	Maximum Operating Temp
VDC at 85°C	µF	KEMET/EIA	(See below for part options)	µA +25°C Maximum/5 Min	% at +25°C 120 Hz Maximum	Ω at 25°C 100 kHz Maximum	(mA) 100 kHz, 25°C	°C
25	1.5	A/3216-18	T491A155(1)025A(2)AUTO	0.5	6	7	104	125
25	1.5	B/3528-21	T491B155(1)025A(2)AUTO	0.5	6	5	130	125
25	2.2	A/3216-18	T491A225(1)025A(2)AUTO	0.6	6	7	104	125
25	2.2	B/3528-21	T491B225(1)025A(2)AUTO	0.6	6	4.5	137	125
25	2.2	C/6032-28	T491C225(1)025A(2)AUTO	0.6	6	3.5	177	125
25	3.3	A/3216-18	T491A335(1)025A(2)AUTO	0.8	6	7	104	125
25	3.3	B/3528-21	T491B335(1)025A(2)AUTO	0.8	6	3.5	156	125
25	3.3	C/6032-28	T491C335(1)025A(2)AUTO	0.8	6	2.5	210	125
25	4.7	C/6032-28	T491C475(1)025A(2)AUTO	1.2	6	2.3	219	125
25	6.8	B/3528-21	T491B685(1)025A(2)AUTO	1.7	6	2.8	174	125
25	6.8	C/6032-28	T491C685(1)025A(2)AUTO	1.7	6	1.9	241	125
25	6.8	D/7343-31	T491D685(1)025A(2)AUTO	1.7	6	1.2	354	125
25	10	C/6032-28	T491C106(1)025A(2)AUTO	2.5	6	1.5	271	125
25	10	D/7343-31	T491D106(1)025A(2)AUTO	2.5	6	1	387	125
25	15	C/6032-28	T491C156(1)025A(2)AUTO	3.8	6	1.5	271	125
25	15	D/7343-31	T491D156(1)025A(2)AUTO	3.8	6	1	387	125
25	22	C/6032-28	T491C226(1)025A(2)AUTO	5.5	6	1	332	125
25	22	D/7343-31	T491D226(1)025A(2)AUTO	5.5	6	0.8	433	125
25	33	C/6032-28	T491C336(1)025A(2)AUTO	8.3	6	0.9	350	125
25	33	D/7343-31	T491D336(1)025A(2)AUTO	8.3	6	0.7	463	125
25	33	X/7343-43	T491X336(1)025A(2)AUTO	8.3	6	0.7	486	125
25	47	D/7343-31	T491D476(1)025A(2)AUTO	11.8	6	0.7	463	125
25	47	X/7343-43	T491X476(1)025A(2)AUTO	11.8	6	0.7	486	125
25	68	X/7343-43	T491X686(1)025A(2)AUTO	17.0	6	0.7	486	125
35	0.1	A/3216-18	T491A104(1)035A(2)AUTO	0.5	4	20	61	125
35	0.15	A/3216-18	T491A154(1)035A(2)AUTO	0.5	4	19	63	125
35	0.22	A/3216-18	T491A224(1)035A(2)AUTO	0.5	4	18	65	125
35	0.33	A/3216-18	T491A334(1)035A(2)AUTO	0.5	4	15	71	125
35	0.47	A/3216-18	T491A474(1)035A(2)AUTO	0.5	4	11	83	125
35	0.47	B/3528-21	T491B474(1)035A(2)AUTO	0.5	4	8	103	125
35	0.68	A/3216-18	T491A684(1)035A(2)AUTO	0.5	4	8	97	125
35	0.68	B/3528-21	T491B684(1)035A(2)AUTO	0.5	4	6.5	114	125
35	1	A/3216-18	T491A105(1)035A(2)AUTO	0.5	4	7	104	125
35	1	B/3528-21	T491B105(1)035A(2)AUTO	0.5	4	5	130	125
35	1.5	B/3528-21	T491B155(1)035A(2)AUTO	0.5	6	5	130	125
35	1.5	C/6032-28	T491C155(1)035A(2)AUTO	0.5	6	4.5	156	125
35	2.2	A/3216-18	T491A225(1)035A(2)AUTO	0.8	6	4.0	137	125
35	2.2	B/3528-21	T491B225(1)035A(2)AUTO	0.8	6	4.0	146	125
35	2.2	C/6032-28	T491C225(1)035A(2)AUTO	0.8	6	3.2	185	125
35	3.3	B/3528-21	T491B335(1)035A(2)AUTO	1.2	6	3.5	156	125
35	3.3	C/6032-28	T491C335(1)035A(2)AUTO	1.2	6	2.4	214	125
35	4.7	B/3528-21	T491B475(1)035A(2)AUTO	1.6	6	3	168	125
35	4.7	C/6032-28	T491C475(1)035A(2)AUTO	1.6	6	2	235	125
35	4.7	D/7343-31	T491D475(1)035A(2)AUTO	1.6	6	1.5	316	125
35	6.8	D/7343-31	T491D685(1)035A(2)AUTO	2.4	6	1.2	354	125
35	6.8	V/7343-20	T491V685(1)035A(2)AUTO	2.4	6	1.2	104	125
35	10	C/6032-28	T491C106(1)035A(2)AUTO	3.5	6	1.6	262	125
35	10	D/7343-31	T491D106(1)035A(2)AUTO	3.5	6	1	387	125
35	10	V/7343-20	T491V106(1)035A(2)AUTO	3.5	6	1	354	125
VDC at 85°C	µF	KEMET/EIA	(See below for part options)	µA +25°C Maximum/5 Min	% at +25°C 120 Hz Maximum	Ω at 25°C 100 kHz Maximum	(mA) 100 kHz, 25°C	°C
Rated Voltage	Rated Cap	Case Code/ Case Size	KEMET Part Number	DC Leakage	DF	ESR	Ripple Current	Maximum Operating Temp

(1) To complete KEMET part number, insert M for ±20% or K for ±10%. Designates Capacitance tolerance.
(2) To complete KEMET part number, insert T = 100% Matte Tin (Sn)-plated, G = Gold-plated, H = Standard Solder coated (SnPb 5% Pb minimum), N = Non-Magnetic 100% Tin (Sn), M = Non-Magnetic (SnPb). Designates Termination Finish.
Refer to Ordering Information for additional detail.
Higher voltage ratings and tighter tolerance product including ESR may be substituted within the same size at KEMET's option. Voltage substitution will be marked with the higher voltage rating. Substitutions can include better than series.

Table 1 – Ratings & Part Number Reference cont.

Rated Voltage	Rated Cap	Case Code/ Case Size	KEMET Part Number	DC Leakage	DF	ESR	Ripple Current	Maximum Operating Temp
VDC at 85°C	µF	KEMET/EIA	(See below for part options)	µA +25°C Maximum/5 Min	% at +25°C 120 Hz Maximum	Ω at 25°C 100 kHz Maximum	(mA) 100 kHz, 25°C	°C
35	15	D/7343-31	T491D156(1)035A(2)AUTO	5.3	6	0.8	433	125
35	15	X/7343-43	T491X156(1)035A(2)AUTO	5.3	6	0.9	428	125
35	22	D/7343-31	T491D226(1)035A(2)AUTO	7.7	6	0.7	463	125
35	22	X/7343-43	T491X226(1)035A(2)AUTO	7.7	6	0.7	486	125
35	33	D/7343-31	T491D336(1)035A(2)AUTO	11.6	6	0.6	500	125
35	33	X/7343-43	T491X336(1)035A(2)AUTO	11.6	6	0.6	524	125
35	47	X/7343-43	T491X476(1)035A(2)AUTO	16.5	6	0.6	524	125
35	47	E/7360-38	T491E476(1)035A(2)AUTO	16.5	10	0.5	632	125
50	0.1	A/3216-18	T491A104(1)050A(2)AUTO	0.5	4	20	61	125
50	0.15	A/3216-18	T491A154(1)050A(2)AUTO	0.5	4	15	71	125
50	0.15	B/3528-21	T491B154(1)050A(2)AUTO	0.5	4	16	73	125
50	0.22	A/3216-18	T491A224(1)050A(2)AUTO	0.5	4	18	65	125
50	0.22	B/3528-21	T491B224(1)050A(2)AUTO	0.5	4	14	78	125
50	0.33	B/3528-21	T491B334(1)050A(2)AUTO	0.5	4	10	92	125
50	0.47	B/3528-21	T491B474(1)050A(2)AUTO	0.5	4	9	97	125
50	0.47	C/6032-28	T491C474(1)050A(2)AUTO	0.5	4	7.2	124	125
50	0.68	B/3528-21	T491B684(1)050A(2)AUTO	0.5	4	8	103	125
50	0.68	C/6032-28	T491C684(1)050A(2)AUTO	0.5	4	6.4	131	125
50	1	C/6032-28	T491C105(1)050A(2)AUTO	0.5	4	4.8	151	125
50	1.5	C/6032-28	T491C155(1)050A(2)AUTO	0.8	6	4.4	158	125
50	1.5	D/7343-31	T491D155(1)050A(2)AUTO	0.8	6	3.5	207	125
50	2.2	D/7343-31	T491D225(1)050A(2)AUTO	1.1	6	2.5	245	125
50	3.3	D/7343-31	T491D335(1)050A(2)AUTO	1.7	6	1.6	306	125
50	4.7	D/7343-31	T491D475(1)050A(2)AUTO	2.4	6	1.2	354	125
50	6.8	D/7343-31	T491D685(1)050A(2)AUTO	3.4	6	0.8	433	125
50	6.8	X/7343-43	T491X685(1)050A(2)AUTO	3.4	6	0.8	454	125
50	10	X/7343-43	T491X106(1)050A(2)AUTO	5.0	6	0.7	486	125
50	22	X/7343-43	T491X226(1)050A(2)AUTO	11.0	10	0.6	524	125
VDC at 85°C	µF	KEMET/EIA	(See below for part options)	µA +25°C Maximum/5 Min	% at +25°C 120 Hz Maximum	Ω at 25°C 100 kHz Maximum	(mA) 100 kHz, 25°C	°C
Rated Voltage	Rated Cap	Case Code/ Case Size	KEMET Part Number	DC Leakage	DF	ESR	Ripple Current	Maximum Operating Temp

(1) To complete KEMET part number, insert M for ±20% or K for ±10%. Designates Capacitance tolerance.
(2) To complete KEMET part number, insert T = 100% Matte Tin (Sn)-plated, G = Gold-plated, H = Standard Solder coated (SnPb 5% Pb minimum), N = Non-Magnetic 100% Tin (Sn), M = Non-Magnetic (SnPb). Designates Termination Finish.
Refer to Ordering Information for additional detail.
Higher voltage ratings and tighter tolerance product including ESR may be substituted within the same size at KEMET's option. Voltage substitution will be marked with the higher voltage rating. Substitutions can include better than series.

Recommended Voltage Derating Guidelines

	−55°C to 85°C	85°C to 125°C
% Change in working DC voltage with temperature	V_R	67% of V_R
Recommended maximum application voltage	50% of V_R	33% of V_R

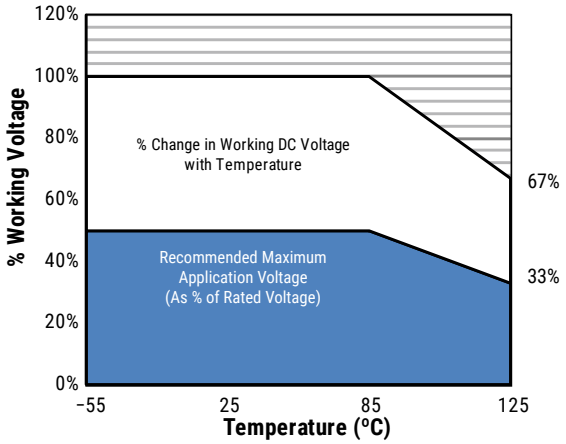

Ripple Current/Ripple Voltage

Permissible AC ripple voltage and current are related to equivalent series resistance (ESR) and the power dissipation capabilities of the device. Permissible AC ripple voltage which may be applied is limited by two criteria:

1. The positive peak AC voltage plus the DC bias voltage, if any, must not exceed the DC voltage rating of the capacitor.
2. The negative peak AC voltage in combination with bias voltage, if any, must not exceed the allowable limits specified for reverse voltage. See the Reverse Voltage section for allowable limits.

The maximum power dissipation by case size can be determined using the table at right. The maximum power dissipation rating stated in the table must be reduced with increasing environmental operating temperatures. Refer to the table below for temperature compensation requirements.

KEMET Series and Case Code	EIA Case Code	Maximum Power Dissipation (Pmax) mWatts at 25°C with +20°C Rise
A	3216–18	75
B	3528–21	85
C	6032–28	110
D	7343–31	150
X	7343–43	165
E	7360–38	200
S	3216–12	60
T	3528–12	70
U	6032–15	90
V	7343–20	125
T510X	7343–43	270
T510E	7360–38	285

Temperature Compensation Multipliers for Maximum Ripple Current		
T ≤ 25°C	T ≤ 85°C	T ≤ 125°C
1.00	0.90	0.40

T= Environmental Temperature

The maximum power dissipation rating must be reduced with increasing environmental operating temperatures. Refer to the Temperature Compensation Multiplier table for details.

Using the Pmax of the device, the maximum allowable rms ripple current or voltage may be determined.

$I(max) = \sqrt{Pmax/R}$
$E(max) = Z\sqrt{Pmax/R}$

I = rms ripple current (amperes)
E = rms ripple voltage (volts)
Pmax = maximum power dissipation (watts)
R = ESR at specified frequency (ohms)
Z = Impedance at specified frequency (ohms)

Reverse Voltage

Solid tantalum capacitors are polar devices and may be permanently damaged or destroyed if connected with the wrong polarity. The positive terminal is identified on the capacitor body by a stripe plus in some cases a beveled edge. A small degree of transient reverse voltage is permissible for short periods per the table. The capacitors should not be operated continuously in reverse mode, even within these limits.

Temperature	Permissible Transient Reverse Voltage
25°C	15% of Rated Voltage
85°C	5% of Rated Voltage
125°C	1% of Rated Voltage

Table 2 – Land Dimensions/Courtyard

KEMET	Metric Size Code	Density Level A: Maximum (Most) Land Protrusion (mm)					Density Level B: Median (Nominal) Land Protrusion (mm)					Density Level C: Minimum (Least) Land Protrusion (mm)				
Case	EIA	W	L	S	V1	V2	W	L	S	V1	V2	W	L	S	V1	V2
A	3216–18	1.35	2.20	0.62	6.02	2.80	1.23	1.80	0.82	4.92	2.30	1.13	1.42	0.98	4.06	2.04
B	3528–21	2.35	2.21	0.92	6.32	4.00	2.23	1.80	1.12	5.22	3.50	2.13	1.42	1.28	4.36	3.24
C	6032–28	2.35	2.77	2.37	8.92	4.50	2.23	2.37	2.57	7.82	4.00	2.13	1.99	2.73	6.96	3.74
D	7343–31	2.55	2.77	3.67	10.22	5.60	2.43	2.37	3.87	9.12	5.10	2.33	1.99	4.03	8.26	4.84
E[1]	7360–38	4.25	2.77	3.67	10.22	7.30	4.13	2.37	3.87	9.12	6.80	4.03	1.99	4.03	8.26	6.54
S[2]	3216–12	1.35	2.20	0.62	6.02	2.80	1.23	1.80	0.82	4.92	2.30	1.13	1.42	0.98	4.06	2.04
T	3528–12	2.35	2.20	0.92	6.32	4.00	2.23	1.80	1.12	5.22	3.50	2.13	1.42	1.28	4.36	3.24
U	6032–15	2.35	2.77	2.37	8.92	4.50	2.23	2.37	2.57	7.82	4.00	2.13	1.99	2.73	6.96	3.74
V	7343–21	2.55	2.77	3.67	10.22	5.60	2.43	2.37	3.87	9.12	5.10	2.33	1.99	4.03	8.26	4.84
X[1]	7343–43	2.55	2.77	3.67	10.22	5.60	2.43	2.37	3.87	9.12	5.10	2.33	1.99	4.03	8.26	4.84

Density Level A: *For low-density product applications. Recommended for wave solder applications and provides a wider process window for reflow solder processes.*
Density Level B: *For products with a moderate level of component density. Provides a robust solder attachment condition for reflow solder processes.*
Density Level C: *For high component density product applications. Before adapting the minimum land pattern variations the user should perform qualification testing based on the conditions outlined in IPC standard 7351 (IPC–7351).*
[1] *Height of these chips may create problems in wave soldering.*

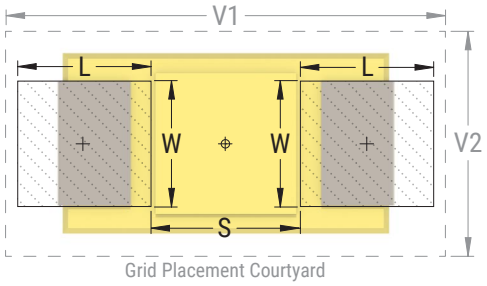

Soldering Process

The KEMET families of surface mount capacitors are compatible with wave (single or dual), convection, IR, or vapor phase reflow techniques. Preheating of these components is recommended to avoid extreme thermal stress. KEMET's recommended profile conditions for convection and IR reflow reflect the profile conditions of the IPC/J–STD–020D standard for moisture sensitivity testing. The devices can safely withstand a maximum of three reflow passes at these conditions.

Please note that although the X/7343–43 case size can withstand wave soldering, the tall profile (4.3 mm maximum) dictates care in wave process development.

Hand soldering should be performed with care due to the difficulty in process control. If performed, care should be taken to avoid contact of the soldering iron to the molded case. The iron should be used to heat the solder pad, applying solder between the pad and the termination, until reflow occurs. Once reflow occurs, the iron should be removed immediately. “Wiping” the edges of a chip and heating the top surface is not recommended.

During typical reflow operations, a slight darkening of the gold-colored epoxy may be observed. This slight darkening is normal and not harmful to the product. Marking permanency is not affected by this change.

Profile Feature	SnPb Assembly	Pb-Free Assembly
Preheat/Soak		
Temperature Minimum (T_{Smin})	100°C	150°C
Temperature Maximum (T_{Smax})	150°C	200°C
Time (t_s) from T_{smin} to T_{smax})	60 – 120 seconds	60 – 120 seconds
Ramp-up Rate (T_L to T_P)	3°C/second maximum	3°C/second maximum
Liquidous Temperature (T_L)	183°C	217°C
Time Above Liquidous (t_L)	60 – 150 seconds	60 – 150 seconds
Peak Temperature (T_P)	220°C* 235°C**	250°C* 260°C**
Time within 5°C of Maximum Peak Temperature (t_P)	20 seconds maximum	30 seconds maximum
Ramp-down Rate (T_P to T_L)	6°C/second maximum	6°C/second maximum
Time 25°C to Peak Temperature	6 minutes maximum	8 minutes maximum

Note: All temperatures refer to the center of the package, measured on the package body surface that is facing up during assembly reflow.
** For Case Size height > 2.5 mm*
*** For Case Size height ≤ 2.5 mm*

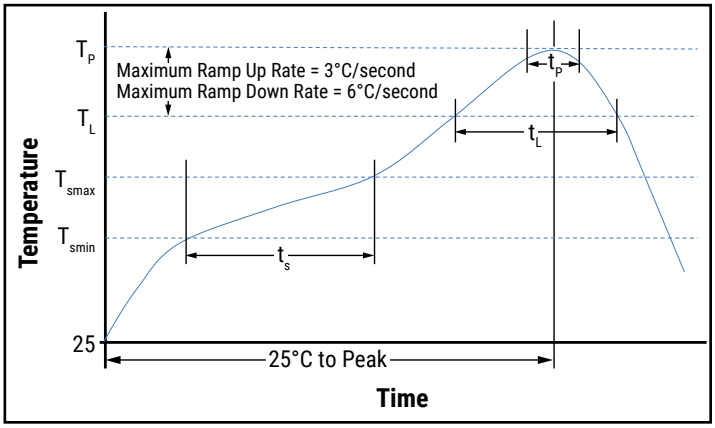

Storage

Tantalum chip capacitors should be stored in normal working environments. While the chips themselves are quite robust in other environments, solderability will be degraded by exposure to high temperatures, high humidity, corrosive atmospheres, and long term storage. In addition, packaging materials will be degraded by high temperature – reels may soften or warp and tape peel force may increase. KEMET recommends that maximum storage temperature not exceed 40°C and maximum storage humidity not exceed 60% relative humidity. Temperature fluctuations should be minimized to avoid condensation on the parts and atmospheres should be free of chlorine and sulphur bearing compounds. For optimized solderability, chip stock should be used promptly, preferably within three years of receipt.

Construction

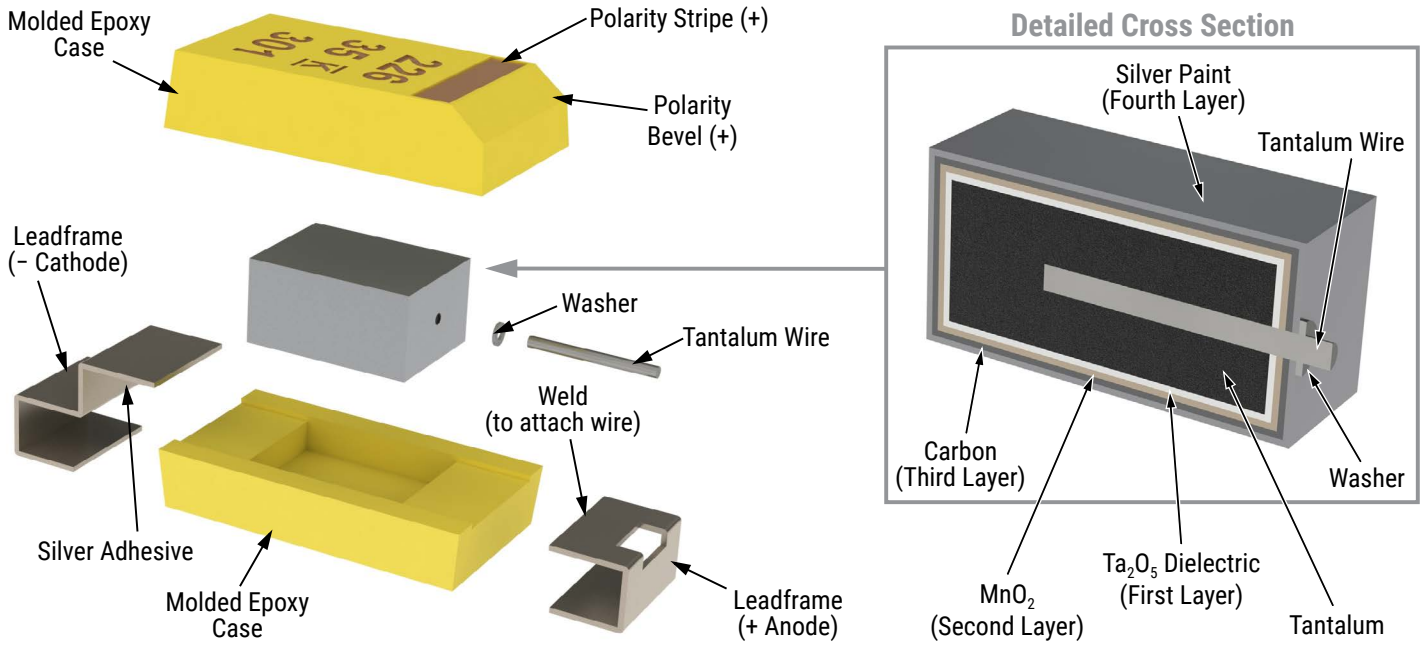

Capacitor Marking

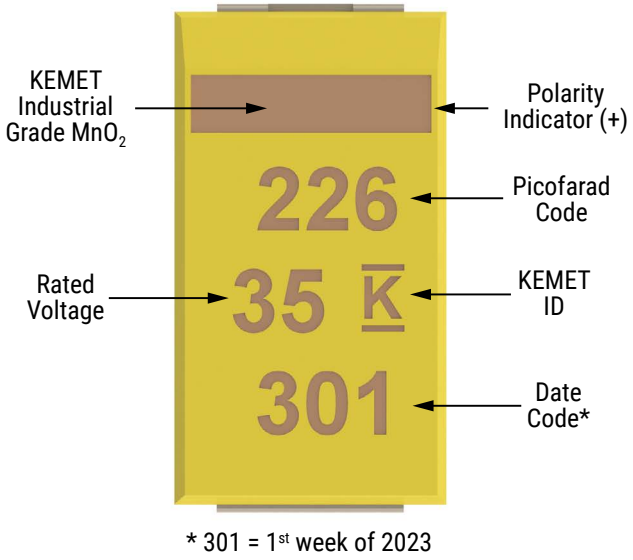

* 301 = 1st week of 2023

Date Code *	
1st digit = last number of year	8 = 2018 9 = 2019 0 = 2020 1 = 2021 2 = 2022 3 = 2023
2nd and 3rd digit = week of the year	01 = 1st week of the year to 52 = 52nd week of the year

Tape & Reel Packaging Information

KEMET's molded chip capacitor families are packaged in 8 and 12 mm plastic tape on 7" and 13" reels in accordance with *EIA Standard 481*: Embossed Carrier Taping of Surface Mount Components for Automatic Handling. This packaging system is compatible with all tape-fed automatic pick-and-place systems.

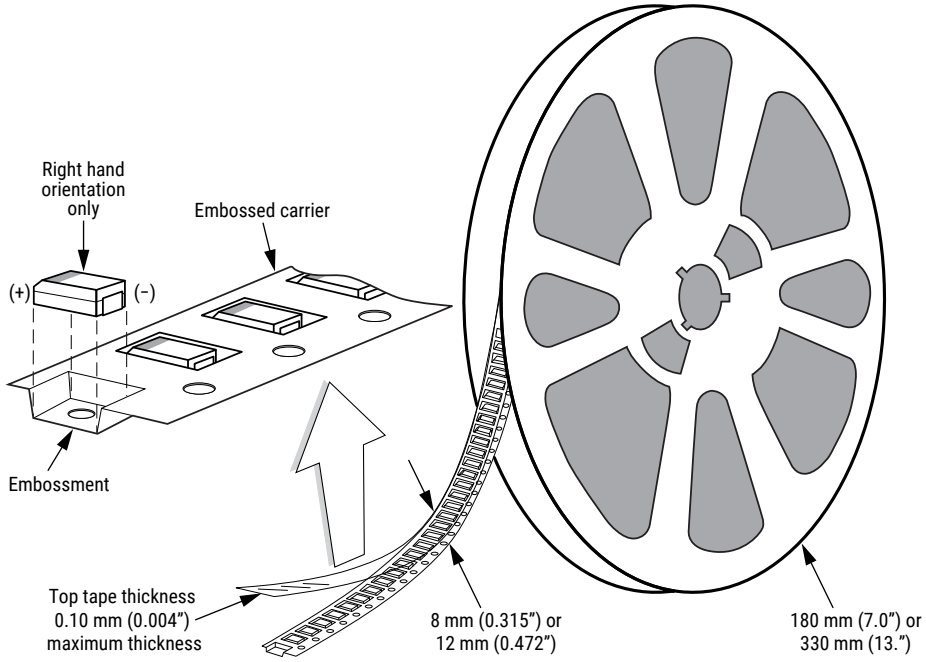

Table 3 – Packaging Quantity

Case Code		Tape Width (mm)	7" Reel*	13" Reel*
KEMET	EIA			
S	3216-12	8	2,500	10,000
T	3528-12	8	2,500	10,000
M	3528-15	8	2,500	8,000
U	6032-15	12	1,000	5,000
L	6032-19	12	1,000	3,000
W	7343-15	12	1,000	3,000
Z	7343-17	12	1,000	3,000
V	7343-20	12	1,000	3,000
A	3216-18	8	2,000	9,000
B	3528-21	8	2,000	8,000
C	6032-28	12	500	3,000
D	7343-31	12	500	2,500
Q	7343-12	12	1,000	3,000
Y	7343-40	12	500	2,000
X	7343-43	12	500	2,000
E/T428P	7360-38	12	500	2,000
H	7360-20	12	1,000	2,500
O	7360-43	12	250	1,000

** No C-Spec required for 7" reel packaging. C-7280 required for 13" reel packaging.*

Figure 1 – Embossed (Plastic) Carrier Tape Dimensions

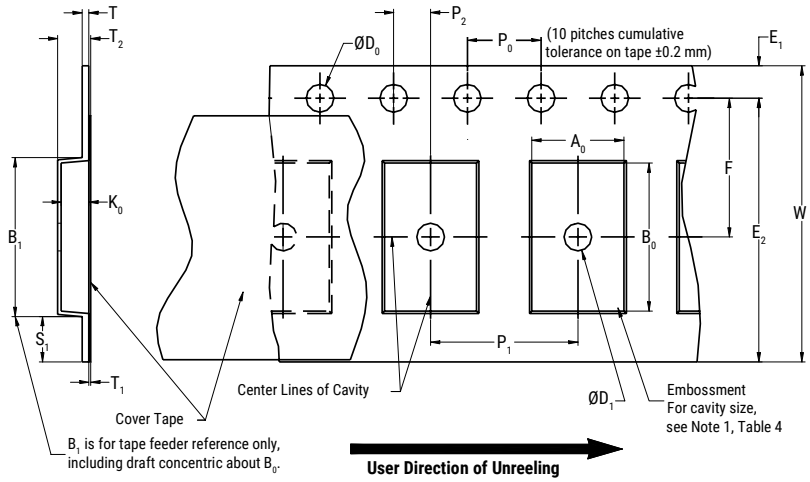

Table 4 – Embossed (Plastic) Carrier Tape Dimensions

Metric will govern

Constant Dimensions — Millimeters (Inches)									
Tape Size	D_0	D_1 Minimum Note 1	E_1	P_0	P_2	R Reference Note 2	S_1 Minimum Note 3	T Maximum	T_1 Maximum
8 mm	1.5 +0.10/−0.0 (0.059 +0.004/−0.0)	1.0 (0.039)	1.75 ±0.10 (0.069 ±0.004)	4.0 ±0.10 (0.157 ±0.004)	2.0 ±0.05 (0.079 ±0.002)	25.0 (0.984)	0.600 (0.024)	0.600 (0.024)	0.100 (0.004)
12 mm		1.5 (0.059)				30 (1.181)			

Variable Dimensions — Millimeters (Inches)								
Tape Size	Pitch	B_1 Maximum Note 4	E_2 Minimum	F	P_1	T_2 Maximum	W Maximum	A_0, B_0 & K_0
8 mm	Single (4 mm)	4.35 (0.171)	6.25 (0.246)	3.5 ±0.05 (0.138 ±0.002)	4.0 ±0.10 (0.157 ±0.004)	2.5 (0.098)	8.3 (0.327)	Note 5
12 mm	Single (4 mm) and Double (8 mm)	8.2 (0.323)	10.25 (0.404)	5.5 ±0.05 (0.217 ±0.002)	8.0 ±0.10 (0.315 ±0.004)	4.6 (0.181)	12.3 (0.484)	

1. The embossment hole location shall be measured from the sprocket hole controlling the location of the embossment. Dimensions of embossment location and hole location shall be applied independent of each other.

2. The tape, with or without components, shall pass around R without damage (see Figure 4).

3. If S_1 < 1.0 mm, there may not be enough area for cover tape to be properly applied (see EIA Standard 481–D, paragraph 4.3, section b).

4. B_1 dimension is a reference dimension for tape feeder clearance only.

5. The cavity defined by A_0, B_0 and K_0 shall surround the component with sufficient clearance that:

(a) the component does not protrude above the top surface of the carrier tape.

(b) the component can be removed from the cavity in a vertical direction without mechanical restriction, after the top cover tape has been removed.

(c) rotation of the component is limited to 20° maximum for 8 and 12 mm tapes (see Figure 2).

(d) lateral movement of the component is restricted to 0.5 mm maximum for 8 mm and 12 mm wide tape (see Figure 3).

(e) see Addendum in EIA Standard 481–D for standards relating to more precise taping requirements.

Packaging Information Performance Notes

1. Cover tape break force: 1.0 kg minimum.
2. Cover tape peel strength: The total peel strength of the cover tape from the carrier tape shall be:

Tape Width	Peel Strength
8 mm	0.1 to 1.0 newton (10 to 100 gf)
12 mm	0.1 to 1.3 newton (10 to 130 gf)

The direction of the pull shall be opposite the direction of the carrier tape travel. The pull angle of the carrier tape shall be 165° to 180° from the plane of the carrier tape. During peeling, the carrier and/or cover tape shall be pulled at a velocity of 300 ±10 mm/minute.
3. Labeling: Bar code labeling (standard or custom) shall be on the side of the reel opposite the sprocket holes. *Refer to EIA Standards 556 and 624*.

Figure 2 – Maximum Component Rotation

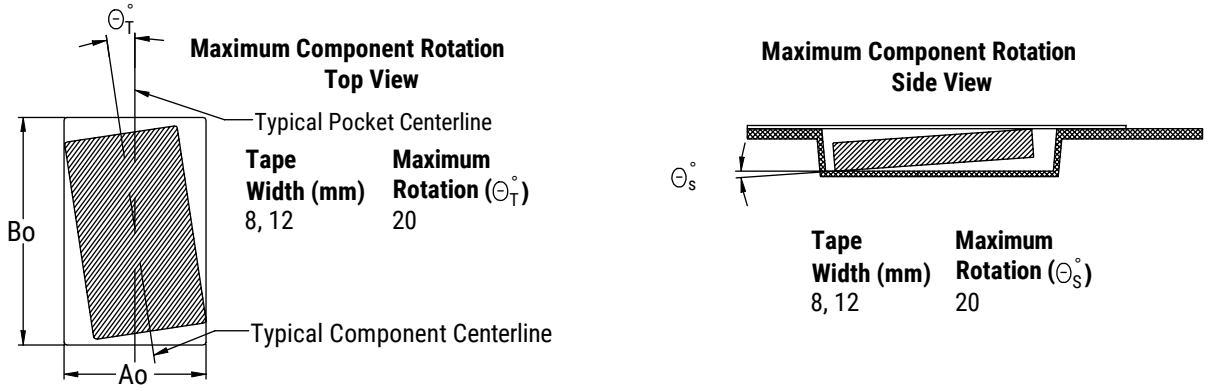

Figure 3 – Maximum Lateral Movement

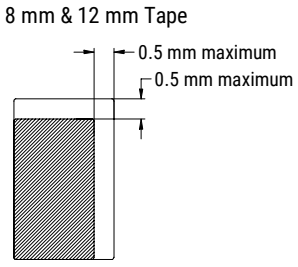

Figure 4 – Bending Radius

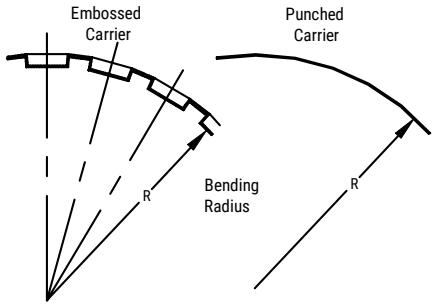

Figure 5 – Reel Dimensions

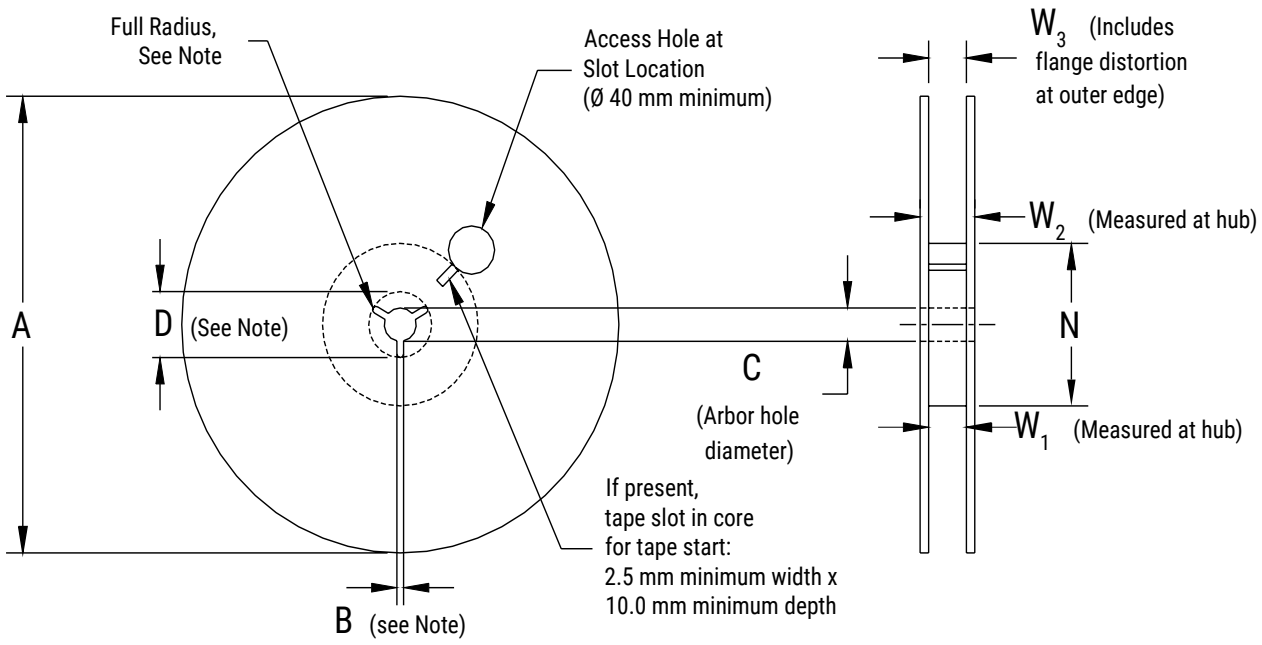

Note: Drive spokes optional; if used, dimensions B and D shall apply.

Table 5 – Reel Dimensions

Metric will govern

Constant Dimensions — Millimeters (Inches)				
Tape Size	A	B Minimum	C	D Minimum
8 mm	178 ±0.20 (7.008 ±0.008) or 330 ±0.20 (13.000 ±0.008)	1.5 (0.059)	13.0 +0.5/−0.2 (0.521 +0.02/−0.008)	20.2 (0.795)
12 mm				

Variable Dimensions — Millimeters (Inches)				
Tape Size	N Minimum	W_1	W_2 Maximum	W_3
8 mm	50 (1.969)	8.4 +1.5/−0.0 (0.331 +0.059/−0.0)	14.4 (0.567)	Shall accommodate tape width without interference
12 mm		12.4 +2.0/−0.0 (0.488 +0.078/−0.0)	18.4 (0.724)	

Figure 6 – Tape Leader & Trailer Dimensions

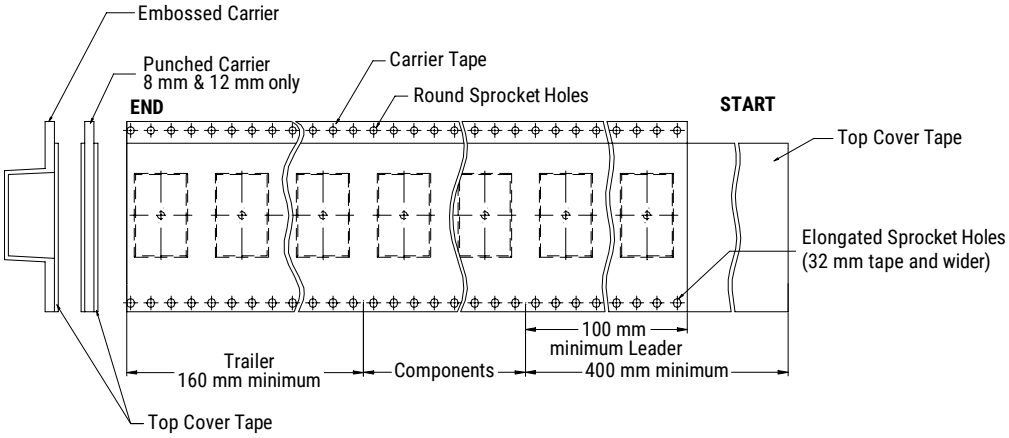

Figure 7 – Maximum Camber

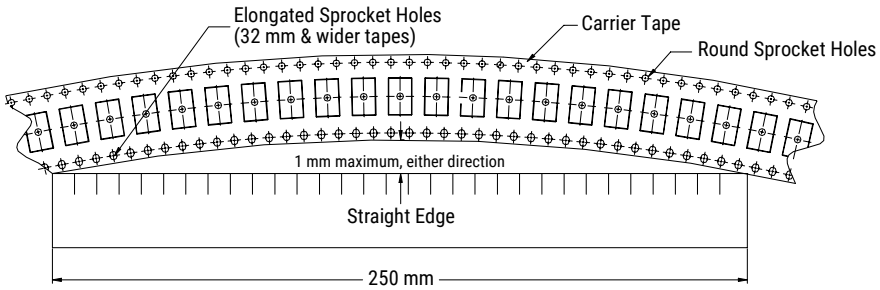

KEMET Electronics Corporation Sales Offices

For a complete list of our global sales offices, please visit www.kemet.com/sales.

Disclaimer

YAGEO Corporation and its affiliates do not recommend the use of commercial or automotive grade products for high reliability applications or manned space flight.

All product specifications, statements, information and data (collectively, the "Information") in this datasheet are subject to change. The customer is responsible for checking and verifying the extent to which the Information contained in this publication is applicable to an order at the time the order is placed. All Information given herein is believed to be accurate and reliable, but it is presented without guarantee, warranty, or responsibility of any kind, expressed or implied.

Statements of suitability for certain applications are based on KEMET Electronics Corporation's ("KEMET") knowledge of typical operating conditions for such applications, but are not intended to constitute – and KEMET specifically disclaims – any warranty concerning suitability for a specific customer application or use. The Information is intended for use only by customers who have the requisite experience and capability to determine the correct products for their application. Any technical advice inferred from this Information or otherwise provided by KEMET with reference to the use of KEMET's products is given gratis, and KEMET assumes no obligation or liability for the advice given or results obtained.

Although KEMET designs and manufactures its products to the most stringent quality and safety standards, given the current state of the art, isolated component failures may still occur. Accordingly, customer applications which require a high degree of reliability or safety should employ suitable designs or other safeguards (such as installation of protective circuitry or redundancies) in order to ensure that the failure of an electrical component does not result in a risk of personal injury or property damage.

Although all product–related warnings, cautions and notes must be observed, the customer should not assume that all safety measures are indicated or that other measures may not be required.

KEMET is a registered trademark of KEMET Electronics Corporation.

Unikeyic Electronics

Global Electronic Components Distributor

Click to view pricing, inventory, delivery, and lifecycle information:

KEMET:

CBR04C180F2GAC CBR04C808B5GAC C0603C273K1RACTU C0603X339C5GACTU MPX1D1740L6R8 SBC4-471-491 T498X106K050ATE500 GTX-2200-Y0X MPX1D1235L1R0 RSBEC1470AA00K C0603C160J5GACTU C4AQLBU5160M11K CBR04C339B5GAC EXV227M050A9PAA PEH532RDG4180M2 SN8S-40P2 SNT-D30T C0603C470K5RACAUTO C1206C222K2RACTU RM4A(025)-185X70T0800 SS26V-080350 T350A104K035AT C0805C473K2RACTU C0805X221M5RACTU R66ID3220AA7AK LDEDD4100KA0N00 C0805C339D5GACTU MPXV1D1054L100 R413F1100CK00M T496X227K010ATE500