General Description

TLV704 series are a set of Low Dropout Linear Regulator ICs implemented in CMOS technology. They can withstand voltage 30V. And they are available with low voltage drop and low quiescent current, widely used in audio, video and communication appliances.

Features

- Low Power Consumption
- Low Voltage Drop
- Low Temperature Coefficient
- Withstanding Voltage 36V
- Quiescent Current 1.8uA
- Output Voltage Accuracy: tolerance ±2%
- High output current: 150mA

Application

- Battery-powered Equipments
- Communication Equipments
- Audio/Video Equipments
- Smart Battery Packs
- Smoke Detectors
- CO2 DETECTORS

Pin Configuration And Descriptions

SOT-23-5L

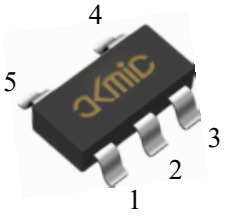

PIN No. SOT-23-5L	Name	Functions Description
1	GND	Ground
2	V_{IN}	Input
3	V_{OUT}	Output
4	NC	No Connect
5	NC	No Connect

Order Information

Orderable Device	Package	Output Voltage	Packing Option
TLV70430DBVR	SOT-23-5L	3.0V	3000/Reel
TLV70433DBVR	SOT-23-5L	3.3V	3000/Reel
TLV70450DBVR	SOT-23-5L	5.0V	3000/Reel

Absolute Maximum Ratings

Description	Symbol	Value Range	Unit
Limit Power Voltage	V_{IN}	-0.3～+33	V
Storage Temperature Range	T_{STG}	-50～+125	°C
Operating Free-air Temperature Range	T_A	-40～+85	°C

Note:Stresses greater than those listed under "Absolute Maximum Ratingsmay" cause permanent damage to the device. These are stress ratings only, and functional operation of the device at these or any other conditions beyond those indicated under "Recommended Operating Conditionsis" not implied. Exposure to "Absolute Maximum Ratings" for extended periods may affect device reliability.

Heat Dissipation

Description	Symbol	Package	Value Range	Unit
Thermal resistance	θ_{JA}	SOT-23-5L	500	°C/W
Power dissipation	P_W	SOT-23-5L	200	mW

Block Diagram

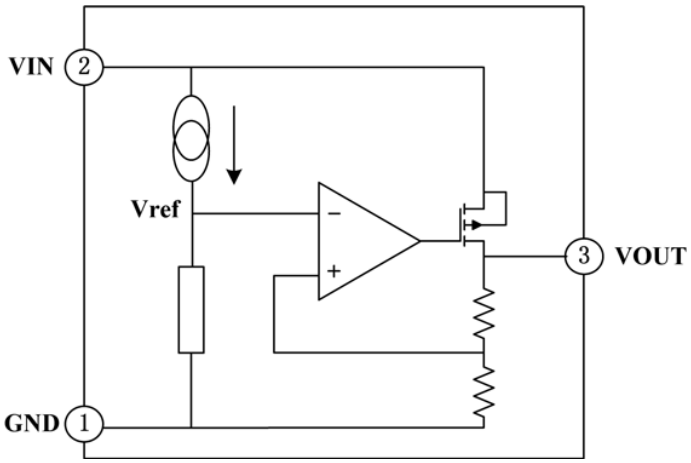

DC Characteristics (unless otherwise noted T_A= 25°C)

(V_{IN}= V_{OUT}+2.0V，C_{IN}=C_L=10uF，Ta=25°C, unless otherwise noted)

Series +3.0V OUTPUT

Parameter	Symbol	Test Condition	Min.	Typ.	Max.	Unit
Output Voltage	V_{OUT}	V_{IN}=V_{OUT}+2.0V，I_{OUT}=10mA	2.94	3.00	3.06	V
Output Current	I_{OUT}	V_{IN}=V_{OUT}+2.0V		150		mA
Load Regulation	△V_{OUT}	V_{IN}=V_{OUT}+2.0V 1mA≤I_{OUT}≤50mA		25	60	mV
Voltage Drop	V_{DIF}	I_{OUT}=1mA，△V_{OUT}=2%		30	100	mV
Quiescent Current	I_{SS}	No Load		1.8	3.0	uA
Line Regulation	△V_{OUT}/V_{OUT}* △V_{IN}	V_{OUT}+1.0V≤V_{IN}≤30V，I_{OUT}=1mA			0.2	%/V
Input Voltage	V_{IN}				30	V
Temperature Coefficient	△V_{OUT}/ △T_A*V_{OUT}	V_{IN}=V_{OUT}+2.0V，I_{OUT}=10mA，-40℃≤T_A≤85℃		100		ppm/°C

Note:When V_{IN}=V_{OUT}+2.0V,as the output voltage declined 2%,the V_{DIF}=V_{IN}-V_{OUT}.

Series +3.3V OUTPUT

Parameter	Symbol	Test Condition	Min.	Typ.	Max.	Unit
Output Voltage	V_{OUT}	V_{IN}=V_{OUT}+2.0V，I_{OUT}=10mA	3.234	3.30	3.366	V
Output Current	I_{OUT}	V_{IN}=V_{OUT}+2.0V		150		mA
Load Regulation	△V_{OUT}	V_{IN}=V_{OUT}+2.0V 1mA≤I_{OUT}≤50mA		25	60	mV
Voltage Drop	V_{DIF}	I_{OUT}=1mA，△V_{OUT}=2%		25	55	mV
Quiescent Current	I_{SS}	No Load		1.8	3.0	uA
Line Regulation	△V_{OUT}/V_{OUT}* △V_{IN}	V_{OUT}+1.0V≤V_{IN}≤30V，I_{OUT}=1mA			0.2	%/V
Input Voltage	V_{IN}				30	V
Temperature Coefficient	△V_{OUT}/ △T_A*V_{OUT}	V_{IN}=V_{OUT}+2.0V，I_{OUT}=10mA，-40℃≤T_A≤85℃		100		ppm/°C

Note:When V_{IN}=V_{OUT}+2.0V,as the output voltage declined 2%,the V_{DIF}=V_{IN}-V_{OUT}.

Series +5.0V OUTPUT

Parameter	Symbol	Test Condition	Min.	Typ.	Max.	Unit
Output Voltage	V_{OUT}	V_{IN}=V_{OUT}+2.0V, I_{OUT}=10mA	4.9	5.0	5.1	V
Output Current	I_{OUT}	V_{IN}=V_{OUT}+2.0V		200		mA
Load Regulation	$\triangle V_{OUT}$	V_{IN}=V_{OUT}+2.0V 1mA≤I_{OUT}≤50mA		25	60	mV
Voltage Drop	V_{DIF}	I_{OUT}=1mA, $\triangle V_{OUT}$=2%		25	55	mV
Quiescent Current	I_{SS}	No Load		1.8	3.0	uA
Line Regulation	$\triangle V_{OUT}/V_{OUT}$* $\triangle V_{IN}$	V_{OUT}+1.0V≤V_{IN}≤30V, I_{OUT}=1mA			0.2	%/V
Input Voltage	V_{IN}				30	V
Temperature Coefficient	$\triangle V_{OUT}$/ $\triangle T_A$*V_{OUT}	V_{IN}=V_{OUT}+2.0V, I_{OUT}=10mA, -40℃≤T_A≤85℃		100		ppm/°C

Note:When V_{IN}=V_{OUT}+2.0V,as the output voltage declined 2%,the V_{DIF}=V_{IN}-V_{OUT}.

Function Description

TLV704 series are linear voltage regulator ICs withstanding 30V voltage. The series IC consists of a voltage reference, an error amplifier, a current limiter and a phase compensation circuit plus a driver transistor. The output stabilization capacitor is also compatible with low ESR ceramic capacitors.The over current protection circuit and the over voltage protection circuit are built-in. The protection circuit will operate wheb the output current or input voltage reaches limit level.

Application Circuit

Basic Circuits

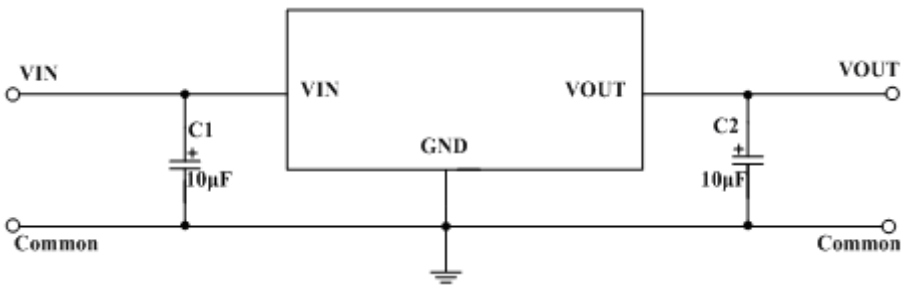

Package Outline Dimensions

SOT-23-5L

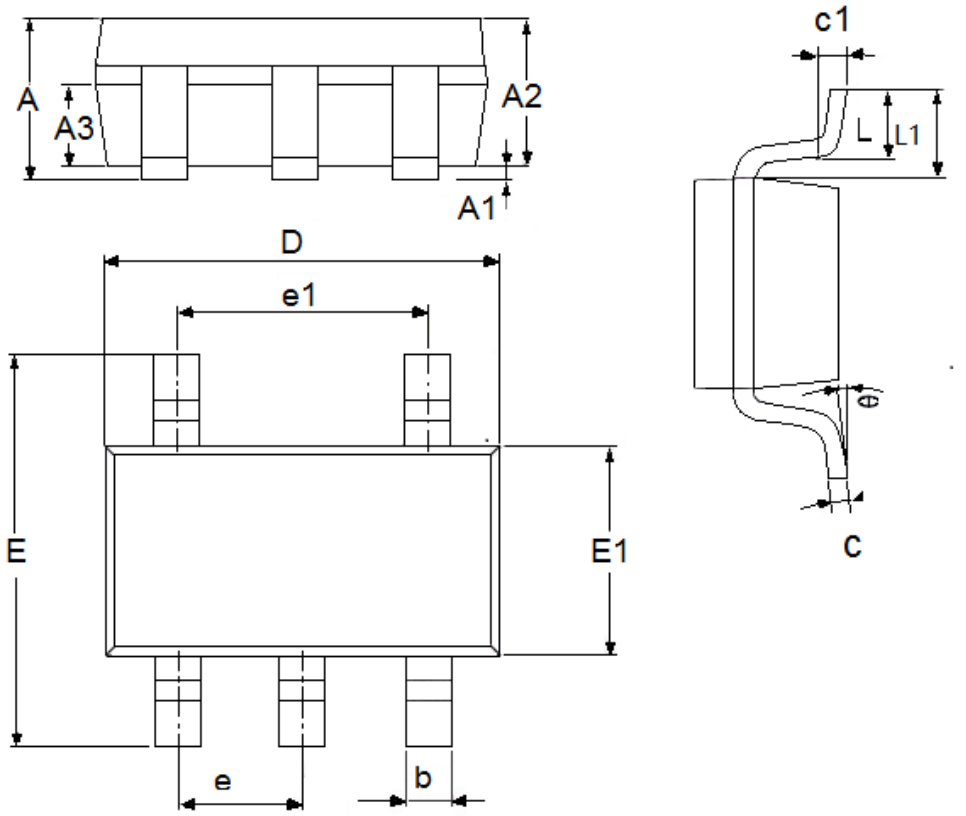

Symbol	Dimensions in Millimeters		Dimensions In Inches	
	Min	Max	Min	Max
A	1.05	1.45	0.0413	0.0571
A1	0	0.15	0.0000	0.0059
A2	0.9	1.3	0.0354	0.0512
A3	0.6	0.7	0.0236	0.0276
b	0.25	0.5	0.0098	0.0197
c	0.1	0.23	0.0039	0.0091
D	2.82	3.05	0.1110	0.1201
e1	1.9(TYP)		0.0748(TYP)	
E	2.6	3.05	0.1024	0.1201
E1	1.5	1.75	0.0512	0.0689
e	0.95(TYP)		0.0374(TYP)	
L	0.25	0.6	0.0098	0.0236
L1	0.59(TYP)		0.0232(TYP)	
θ	0	8°	0.0000	8°
c1	0.2(TYP)		0.0079(TYP)	