CONTI® V-belts



ContiTech Division of Continental AG

CONTITECH

ContiTech
Specialist in rubber and plastics technology

The ContiTech Division is a development partner and original equipment manufacturer for many branches of industry: with high-grade functional parts, components and systems. It is part of the Continental AG with 8 business units specialising in rubber and plastics technology and utilising their common know-how.

That's what the ContiTech brand is all about.

CONTITECH

3–22 **1 Product identification**
4/5 Survey of products
6–10 General data
11–14 CONTI FO®-Z heavy-duty cogged raw edge V-belts
15/17 CONTI ULTRAFLEX® narrow-section wrapped V-belts
18–22 CONTI MULTIFLEX® classical-section wrapped V-belts

23–28 **2 V-belt pulleys**
24 Selection
25 Application
26 Pulleys for heavy-duty cogged raw edge and narrow-section V-belts
27 Pulleys for heavy-duty cogged raw edge and classical section V-belts
28 Deep-groove pulleys

29–70 **3 Calculation of V-belt drives**
30/31 Symbols, units, terms
32–42 design data
43–49 Power ratings P_R for CONTI FO®-Z
50–53 Power ratings P_R for CONTI ULTRAFLEX®
54–62 Power ratings P_R for CONTI MULTIFLEX®
63–65 Example of calculation for two-pulley drive
66–69 Example of calculation for V-flat drive
70 ContiTech calculation service

71–74 **4 V-belt length measurement**
75–80 **5 Installation, maintenance and storage of V-belts**
76/77 Installation and maintenance of V-belts
77 storage of V-belts

81–83 **6 Standard specifications**

84/85 **Index**



TÜV CERT

CERTIFICATE

The TÜV CERT Certification Body of Rheinisch-Westfälischer TÜV e.V.

hereby certifies in accordance with TÜV CERT procedure that

ContiTech Antriebssysteme GmbH
Vahrenwald Plant
30165 Hannover/Germany

has established and applies a quality system for

Development, Manufacture and Sale of multiple V-ripped Belts, Raw-edged cogged V-belts, wrapped V-belts and Rubber toothed Belts

An audit was performed in accordance with the requirements of QS-9000, Appendix B, Code of Practice and documented in Report No. **20405778**

Proof has been furnished that the requirements according to **DIN EN ISO 9001 : 1994 and QS-9000 : 1998** are fulfilled.

The certificate is valid until **July 2003**

Certificate Registration No. **041017007**

RWTÜV



VDA TÜV CERT RWTÜV

SUPPLEMENTARY CERTIFICATE

The TÜV CERT Certification Body of Rheinisch-Westfälischer TÜV (RWTÜV) e.V.

VERBAND DER AUTOMOBILINDUSTRIE e.V. (VDA) / Cert. N° 07/97

certifies in accordance with TÜV CERT procedures that

ContiTech Antriebssysteme GmbH
Plant Vahrenwald
D-30165 Hannover
Location: Plant Vahrenwald

Producer of multiple V-ripped Belts, Raw-edged cogged V-belts, wrapped V-belts and Rubber toothed Belts for the Automotive Industry

applies a

quality system in accordance with VDA 6, Part 1
- material products -

with product development

This supplementary certificate is only valid in conjunction with TÜV CERT Certificate, Registration No. **041017007**

It certifies that the QM System is additionally qualified on the basis of the fulfilment of the requirements of VDA 6, Part 1 extending the requirements of DIN EN ISO 9001 : 1997 / QS-9000 : 1998.

Proof has been furnished within the framework of the certification audit, Report No. 20405778

This certificate is valid until **July 2003**
Date of issue **13.07.2000**

Survey of products
General data
CONTI FO®-Z heavy-duty cogged raw edge V-belts
CONTI ULTRAFLEX® narrow-section wrapped V-belts
CONTI MULTIFLEX® classical-section wrapped V-belts

Product identification

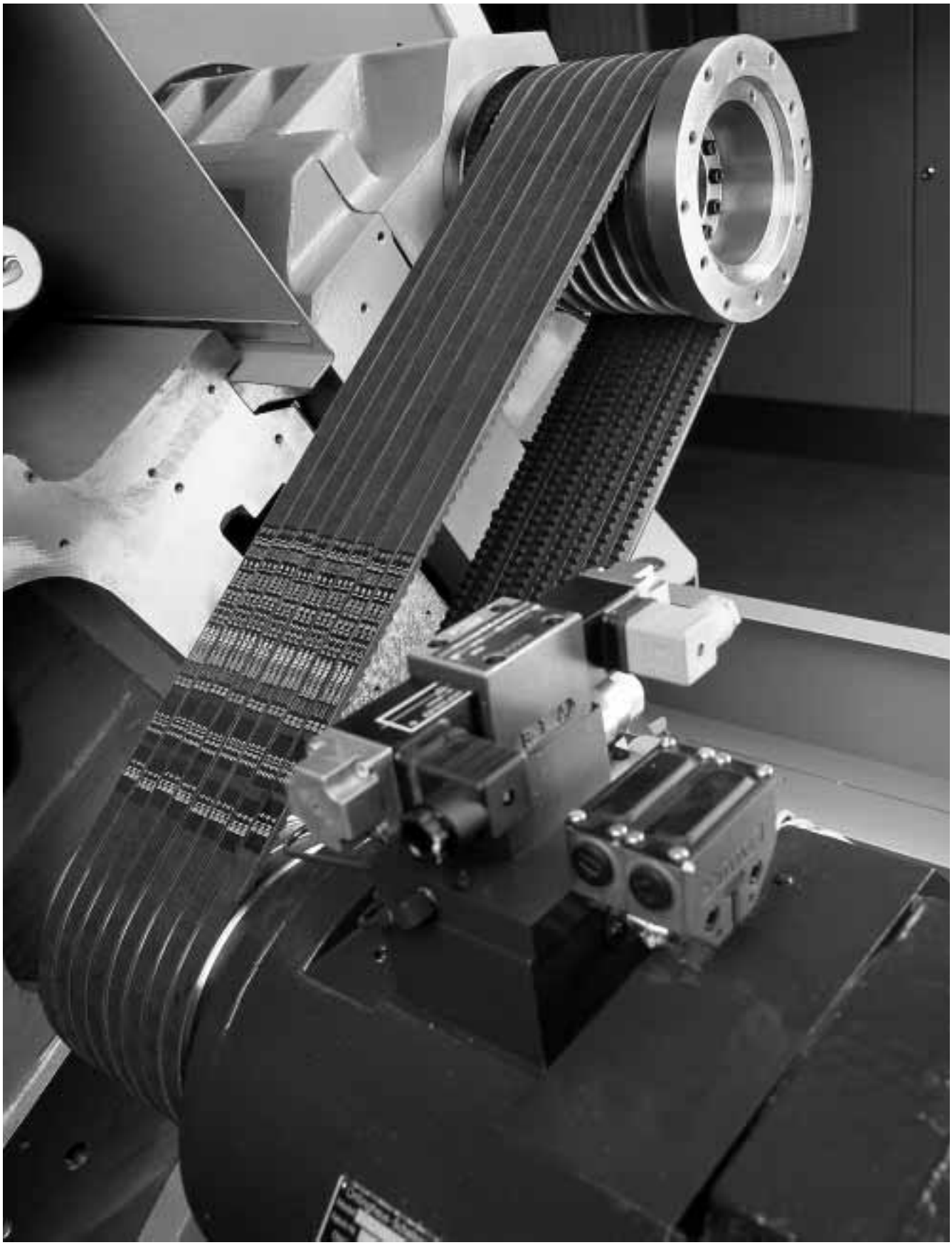

Matched-length CONTI FO®-Z heavy-duty cogged raw edge V-belts on a CNC-machine in a processing centre

Survey of products

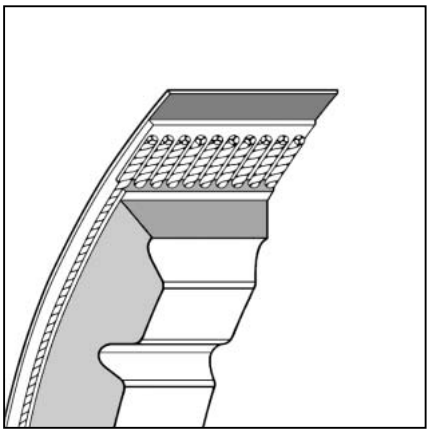

CONTI FO®-Z
heavy-duty cogged raw edge V-belts

CONTI FO®-Z heavy-duty cogged raw edge V-belts to DIN standard 7753 part 1 and DIN standard 2215 meet the most stringent demands of modern drive technology.

They are manufactured in a raw edge finish by a new production process. Their construction and the materials used in them permit extremely high power transmissions with compact drives.

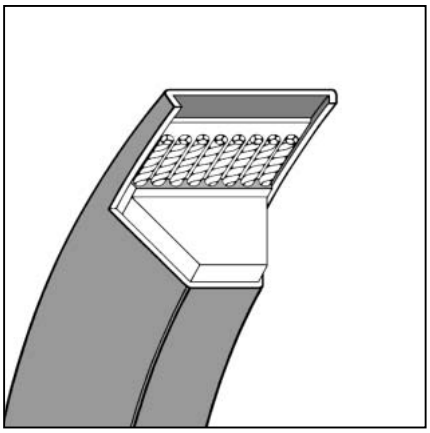

CONTI ULTRAFLEX®
narrow-section wrapped V-belts

CONTI ULTRAFLEX® narrow-section wrapped V-belts to DIN standard 7753 part 1 and B.S. 3790 are used on drives in all spheres of mechanical engineering.

Their sections are dimensioned to permit economic solutions with space saving constructions. Multi grooved drives with MATCHED SET V-belts – i.e. belts of precisely equal length can be used for higher performances.

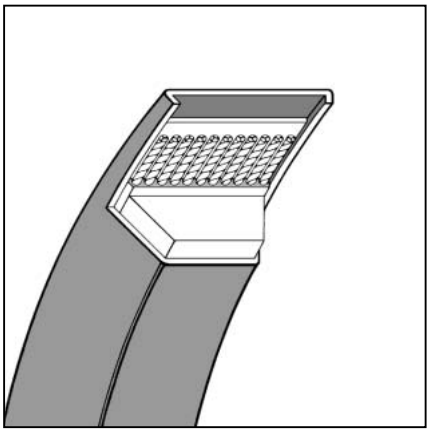

CONTI MULTIFLEX®
classical-section wrapped V-belts

CONTI MULTIFLEX® classical-section wrapped V-belts to DIN standard 2215 and B.S. 3790 are designed for a industrial applications from precision engineering to heavy machine construction.

9 different sections including international standard sections A to E, together with highly developed elastomers and tension members, provide power transmission products for universal application.

Other belts in our product range

CONTI-V MULTIRIB® multiple V-ribbed belt for small pulley diameters and large transmission ratios

CONTI VARIDUR® variable speed cogged raw edge belt for continuous speed adjustment under high stress.

CONTI VARIFLEX® variable speed cogged raw edge belt for continuous speed adjustment in mechanical engineering.

CONTI AGRIDUR® variable speed cogged raw edge belt for continuous speed adjustment in agricultural machinery.

CONTI SYNCHROFORCE® and SYNCHROBELT® double toothed timing belt.

CONTI SYNCHROFORCE® CXA III and **CXP III** the new generation of heavy duty timing belts.

CONTI SYNCHROBELT® HTD Synchronous Drive Belt for compact synchronous drives with high transmission ratios.

CONTI SYNCHROBELT® STD Synchronous Drive Belt for synchronous drives with smooth-running properties.

CONTI SYNCHROBELT® Synchronous Drive Belt for synchronous drives in precision and mechanical engineering

CONTI® SYNCHRODRIVE Synchronous Drive Belt for synchronous conveying systems and linear drives.

General data

ContiTech V-belts are based on decades of experience in production and practical application. Any new knowledge gained in the sphere of power transmission technology is evaluated through constant research and development work and is then applied to production, materials selection and quality assurance.

Construction

ContiTech V-belts are made from high-grade materials, the most suitable material for the specific application being selected for elastomer compounds, tension members and fabric jackets. They are produced on purpose-built equipment, using optimum conditions to produce quality products.

The high standard is ensured by constant quality control procedures in all stages of production

Properties

ContiTech V-belts have been purpose-designed for their specific requirements. They meet the demands of modern technology for maximum operating reliability and economic efficiency.

Matched sets
In a single high precision process and using state of the art technology, matched sets of V-belts are manufactured in exactly the same length. On multi-belt drives their even load distribution ensures high power transmission capacity and their long service life ensures good cost-effectiveness. They are low-stretch, smooth running, and the tension stays constant.

With these properties there are no restrictions on putting together sets of matched-length belts. Ordering and warehousing procedures are simplified as all V-belts can be used for single-belt or multi-belt drives. Belts do not have to be ordered in bundles.

CONTI FO®-Z, CONTI ULTRAFLEX® and CONTI MULTIFLEX® are supplied in bulk for lengths from 1000 mm. The standard lengths allow immediate availability and hence economic inventory levels at the user.

In the event of a failure of a single V-belt on a multi groove drive, all belts are to be replaced by matched-length belts.

Standard properties
All ContiTech V-belts have certain properties as standard features:

Moderate resistance to oil
Oil or grease acting on the belt briefly and only occasionally has no effect on efficiency and service life. Tests at up to 70 °C on V-belts that have been exposed completely to ASTM oils have shown that they have a high resistance to hydrocarbon oils.

The wide range of oils and especially of additives available on the market prevents any general claim being made with respect to oil resistance.

Constant exposure to lubricating oils or grease and to cooling oils and cutting oils invariably results in swelling and disintegrations and consequently in reduced efficiency.

Resistance to extreme temperatures
Ambient temperatures of between –30 °C and +80 °C are permissible for CONTI FO®-Z heavy-duty cogged raw edge V-belts; temperatures of between –55 °C and +70 °C are permissible for wrapped belts. When the drive system is commissioned at a low temperature, the full flexibility of the V-belt is only attained after some flexing. Temperatures in excess of those stated result in a reduced running period due to hardening.

Antistatic properties
Wrapped V-belts made by ContiTech in compliance with DIN 2215 and 7753 Part 1 have antistatic properties as per ISO 1813 and are marked EL.

The antistatic properties ensure that electrostatic charges are conducted away safely to prevent any risk of sparking. So ContiTech wrapped V-belts may be used in areas where the ignition of flammable gas or gas/air/dust mixtures could cause an explosion. However, all machines must be properly earthed.

Resistance to dust
The surface of heavy-duty V-belts type CONTI FO®-Z, or alternatively the fabric jacket, are highly abrasion resistant. Their abrasion resistance is especially relevant when they are subjected to the effects of dirt, grit etc., e.g. in cement works, in agriculture and in mining.

Suitable for tropical climates
Tests in a standard damp heat atmosphere as per DIN 50017 have shown that ContiTech V-belts can be used unreservedly in tropical regions.

Special-duty types
ContiTech V-belts are also available in a range of special-duty types. Possible applications are listed in the product description of each individual type.

Minimum order quantities and prices of made-to-order products are quoted on request.

MONTAN: ContiTech V-belts of the MONTAN type are approved by the State Mining Board (LOBA) of North Rhine-Westphalia for use in underground mining and in aboveground environments with fire and/or explosion hazards. The approval registration number is LOBA NW 18.43.21-55-25 dated 30.10.1981. The V-belts concerned are listed in Table 1 on the following page.

This approval constitutes a representation that ContiTech V-belts in MONTAN special-duty version fulfill stringent specifications relating to fire, electricity and health hazards and are suitable for use below ground and in above-ground environments with fire and/or explosion hazards.

LOBA-approved CONTI® V-belts

Table 1

CONTI ULTRAFLEX® MONTAN narrow-section wrapped V-belts to DIN 7753 part 1 and B.S. 3790		CONTI MULTIFLEX® MONTAN classical-section wrapped V-belts to DIN 2215 and B.S. 3790	
Section	Pitch length L_w up to	Section	Pitch length L_i up to
SPZ	3550 mm	10/Z	2800 mm
SPA	4500 mm	13/A	4250 mm
SPB	8000 mm	17/B	6300 mm
SPC	10000 mm	20/–	9500 mm
		22/C	8000 mm
		25/–	10000 mm
		32/D	10000 mm
		40/E	10000 mm

These ContiTech V-belts can be marked on request with the word MONTAN.

LR: extra smooth-running, e.g. for machine tools.
ContiTech V-belts in LR special-duty type offer maximum running smoothness. They are used above all in machine tools, whose drives must run smoothly and with minimum oscillation. LR V-belts are manufactured by a special technique, and their performance is tested dynamically on test equipment.
CONTI FO®-Z heavy-duty cogged raw edge V-belts of standard production run extra smoothly owing to the manufacturing technique. One great advantage of CONTI FO®-Z heavy-duty cogged raw edge V belts is that their edges can be ground to improve their running smoothness.
CONTI FO®-Z heavy-duty cogged raw edge V-belts have moulded cogs as a standard feature.

36: for drives with counter-flexing, e.g. jockey pulleys.
ContiTech V-belts of type CONTI ULTRAFLEX® from section SPA onwards and type CONTI MULTIFLEX® from section 13/A onwards can be supplied in special-duty type "36". The tension member of these V-belts is approximately half way up the belt. They can be used for applications with counter-flexing. V-belts that can be tensioned only with an external jockey pulley require this modified position of the tension member as opposed to the standard version.

VF: with reinforced tension member for high torque drives.
ContiTech V-belts in special-duty type VF are designed for special drives with high torques. They have a reinforced tension member. ContiTech application engineers are pleased to give advice on drive design for this special-duty type.

Product range

Sections
ContiTech V-belts comply with DIN, B.S. and ISO standards. They are internationally interchangeable.

Tables for the individual types of V-belt list the sections available together with their dimensions.

Lengths
ContiTech V-belts are supplied in standard lengths. There are furthermore production facilities for a wide range of intermediate lengths.

The lengths available are listed on pages 14, 17 and 21.

The lengths are designated for the various belt types (table 2), as shown below.

Length destination — Table 2

Type of V-belt	Designation
CONTI FO®-Z heavy-duty cogged raw edge V-belt	Datum length L_w
CONTI ULTRAFLEX® narrow-section wrapped V-belt	Datum length L_w
CONTI MULTIFLEX® classical-section wrapped V-belt	Inside length L_i

Designation

The full designation of the individual types of V-belt is explained in the product descriptions. Precise designations exclude the possibility of mistakes and misunderstandings when orders are handled.

Drive calculation

Drives with ContiTech V-belts are designed in accordance with well known principles and methods. These are set out in the chapter on "Calculation of V-belts drives".

The V-belt dimensions required for calculation are listed in the "Dimensional Data" tables for the individual types.

The power ratings for ContiTech V-belts are in line with latest developments.

ContiTech application engineers are pleased to give advice on complex drive problems and series applications. In house computer programs for drive calculation permit optimum drive design to be attained in a short time (cf. page 70).

V-belt pulleys

V-belt pulleys are standardized to DIN 2211, DIN 2217 and B.S. 3790 specifications. Special information on individual types of V-belt or special applications is given in the product description of the specific type.

CONTI FO®-Z
heavy-duty cogged raw edge V-belts

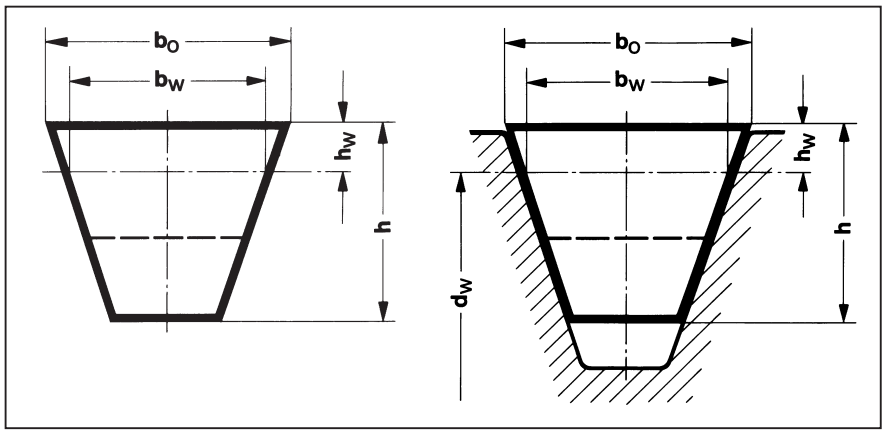

Belt dimensions Fig. 1

Dimensional data

Table 3

Standard		DIN 2215/ISO 4184			DIN 7753 Part 1/ISO 4184			
Belt section	DIN symbol B.S./ISO symbol	5 –	6 Y	8 –	XPZ SPZ	XPA SPA	XPB SPB	XPC SPC
Top belt width $b_o \approx$	mm	5	6	8	10	13	16.5	22
Pitch width b_w	mm	4.2	5.3	6.7	8.5	11.0	14.0	19.0
Height of belt h ≈	mm	3	4	5	8	9	13	17
Pitch height $h_w \approx$	mm	1.3	1.6	2.0	2.0	2.8	3.5	4.8
Min. pulley pitch diameter $d_{w\ min}$ [1]	mm	16	20	31.5	50	63	100	160
Max. flexing frequency $f_{B\ max}$	s^{-1}	120	120	120	120	120	120	120
Max. belt speed v_{max}	m/s	50	50	50	50	50	50	50
Weight per metre	kg/m	0.015	0.023	0.041	0.072	0.112	0.192	0.370
Range of pitch length L_w [2] from	mm	171	285	171	590	590	1250	2000
to	mm	611	865	611	3550	3550	3550	3550
Length differential value from L_w $\Delta L = L_w - L_i$	mm	11	15	19	–	–	–	–

[1] d_w corresponds to the datum diameter d_r
[2] L_w corresponds to the datum length L_d

CONTI FO®-Z heavy-duty cogged V-belts are manufactured in a raw edge type. They are the culmination or consistent advances in V-belt technology. New designs and improved materials ensure great flexibility in the longitudinal direction and excellent transverse rigidity. So these belts meet the demanding requirements of modern power transmission systems and open up new applications for this type of V-belt in all areas of mechanical engineering.

Designation

CONTI FO®-Z heavy-duty V-belt XPZ 1400 L_w stands for a raw edge, cogged, narrow-section V-belt in accordance with DIN 7753 Part 1 that has section XPZ and pitch length 1400 mm and CONTI FO®-Z heavy-duty V-belt 6 x 450 stands for a raw edge, cogged, classical-section V-belt in accordance with DIN 2215 that has section 6 and inside length 450 mm.

Construction

CONTI FO®-Z heavy-duty cogged V-belts are manufactured as raw edge belts with no fabric jacket. The high quality of this type of V-belt is guaranteed by an optimum combination of production technology and high-grade materials for the tension member and for the elastomer compounds.

The tension member consists of high-strength, low-elongation polyester cord that was purpose-developed for CONTI FO®-Z heavy duty cogged raw edge V-belts. It develops an extra high bonding level with the surrounding elastomer compound, the "cushion compound". The driving forces are absorbed in the belt section by friction transmission and transferred to the tension member via the base rubber and cushion compound. New bonding systems have been developed by Conti-Tech in order to compensate for the significant difference between the two moduli of elasticity.

Polychloroprene-based elastomer compounds and special purpose components make CONTI FO®-Z heavy-duty cogged raw edge V-belts an outstandingly high-grade transmission product.

The base rubber consists of an elastomer/fibre compound with the fibres running in a transverse direction. This means that the base rubber is extra flexible in the longitudinal direction and has flexural strength in the transverse direction.

The flexing porperties are also enhanced considerably by the moulded cog construction.

Properties

CONTI FO®-Z heavy-duty cogged raw edge V-belts have a top-width-to-height ratio of approx. 1.2 for narrow-section V-belts and of approx. 1.6 for classical-section V-belts.

CONTI FO®-Z heavy duty cogged raw edge V-belts of sections XPZ, XPA, XPB and XPC are series-manufactured in matched lengths (see page 6). There are no restrictions on putting together sets.

The belt design permits compact, space-saving drive systems and provides new solutions to drive related problems in all branches of engineering.

High power transmission capacity
The fibres, positioned transverse to the direction of belt travel in the base rubber, give these belts outstanding transverse rigidity, with a consequent marked improvement in the slip/power properties in comparison with conventional wrapped V-belts. The power ratings of CONTI FO®-Z heavy-duty cogged raw edge V-belts are considerably higher than those of any other type.

Outstanding flexibility
The flexibility of the purpose-developed base rubber is enhanced by the moulded cog construction. This reduces bending stress and heat build-up, with a consequent increase in service life. It furthermore permits the use of smaller pulley diameters.

Low elongation
Materials, construction and the manufacturing process ensure a low initial stretch (attained after an operating period of approx 20 minutes). After this brief running in phase, CONTI FO®-Z heavy-duty cogged raw edge V belts are virtually stable in length and offer a considerable reduction in maintenance.

Outstanding runnig smoothness
The homogeneous construction and the production technology result in V-belts with outstanding running properties. The running smoothness can be enhanced decisively by grinding.

Increased resistance to high temperatures
The use of polychloroprene based elastomer compounds permits higher ambient temperatures of up to +80°C. At the same time the moulded cog construction offers a larger surface area and better ventilation. Heat buildup is reduced and heat dissipation improved.

These properties of CONTI FO®-Z heavy-duty cogged raw edge V-belts permit application
– with very small pulley diameters
– at high motor speeds
– with high power transmission
– at high belt speeds
– in high ambient temperatures

The use of extra small pulley diameters enables conventional multi-stage drives to be replaced by single stage constructions.

High power ratings and outstanding flexibility permit compact drive systems to be designed by cutting down the number of V-belts in one set or reducing the pulley diameter.

CONT FO®-Z heavy-duty cogged raw edge V-belts have the following standard features:
– resistance to oil
– suitable for temperatures from –30°C to 80°C
– antistatic properties
– resistance to dust
– suitable for tropical climates

Special-duty types
LR: extra smooth running, e.g. for machine tools.

Explanations on standard properties and special-duty types are given in the section on "General data" (page 6)

Product range

CONTI FO®-Z heavy-duty cogged raw edge V-belts are manufactured in sections 5/-, 6/Y and 8/- to DIN standard 2215 and in sections XPZ, XPA, XPB and XPC to DIN standard 7753 part 1.

V-belts in sections 10/Z, 13/A, 17/B and 22/C can also be supplied on request as CONTI FO®-Z heavy-duty cogged raw edge V-belts. Details on available types and drive system designs on application to ContiTech.

CONTI FO®-Z heavy-duty cogged raw edge V-belts comply in their sections with ISO 4184

CONTI FO®-Z heavy-duty cogged raw edge V-belts to DIN 2215 standards are designated by the inside length L_i, and those to DIN 7753 part 1 standards by the pitch length L_w.

Available lengths are listed in table 4 (page 14).

Drive calculation

Drives with CONTI FO®-Z heavy duty cogged raw edge V-belts are designed in accordance with the data set out in the chapter on "Calculation of V-belt drives". The calculation method is in line with internationally recognized principles.

The pitch length L_w is used for calculation of belts of all sections. For sections 5/-, 6/Y and 8/- the difference between the pitch length L_w and the inside length L_i is given for each section by a nominal length differential value ΔL (cf. dimensional data, table 3).

ContiTech application engineers are pieased to give advice on complex drive problems and series applications.

V-belt pulleys

CONTI FO®-Z heavy duty cogged raw edge V-belts are designed for pulleys complying with DIN standards 2211 and 2217 and B.S. 3790. The minimum pulley diameters for CONTI FO®-Z heavy-duty cogged raw edge V-belts are smaller than those values specified in the standards (cf. dimensional data, table 3).

Details are given in the chapter on "V-belt pulleys" (page 23).

Length available for CONTI-FO®-Z heavy-duty cogged raw edge V-belts — Table 4

Section 5/-

Inside length L_i (mm)	Datum length L_d (mm)
160	171
185*	196*
190*	201*
236*	247*
260*	271*
265*	276*
270	281
280	291
287*	298*
300	311
303*	314*
315	326
322	333
330*	341*
335	346
340	351
345*	356*
350*	361*
352	363
358*	369*
375	386
400	411
406*	417*
420*	431*
425	436
435*	446*
441	452*
450	461
465*	476*
471*	482*
475*	486*
495*	506*
500*	511*
514*	525*
530	541
554*	565*
560*	571*
600	611

Section 6/Y

Inside length L_i (mm)	Datum length L_d (mm)
240*	255*
250*	265*
260*	275*
265*	280*
270	285
280	295
300	315
315	330
320*	335*
330*	345*
335	350
339	354
350*	365*
352	367
372*	387*
375	390
380*	395*
400	415
425	440
450	465
495	510
500*	515*
530	545
540*	555*
550*	565*
560	575
580*	595*
600	615
640*	655*
850	865
900*	915*

Section 8/-

Inside length L_i (mm)	Datum length L_d (mm)
160	179
280	299
300	319
315	334
322	341
335*	354*
340	359
355	374
375	394
400	419
430*	449*
450	469
475*	494*
495	514
530	549
560*	579*
580*	599*
600	619
630*	649*
655*	674*
670*	689*
680*	699*
700*	719*
710*	729*
717*	736*
750*	769*
800*	819*

Section 10/Z

Datum length L_d (mm)	
375*	710*
380*	725*
400*	750*
425*	765*
440*	775*
450*	790*
460*	800*
475*	820*
500*	825*
520*	840*
525*	850*
530*	865*
560*	875*
575*	900*
590*	925*
600	940*
615*	950*
630*	980*
650*	
660*	
670*	
680*	
700*	

Section 13/A

Datum length L_d (mm)	
400*	600*
407*	630*
460*	655*
475*	670*
483*	690*
508*	710*
525*	730*
535*	750*
540*	767*
560*	780*
580*	787*

Section XPZ

Datum length L_d (mm)	
590	1280
610	1300
630	1320
640	1340
660	1360
670	1380
690	1400
710	1430
730	1450
750	1480
760	1500
780	1530
800	1550
820	1580
830	1600
850	1630
860	1650
880	1680
900	1700
910	1750
930	1800
950	1850
960	1900
980	1950
1000	2000
1030	2120
1060	2240
1090	2360
1120	2500
1140	2650
1150	2800
1180	3000
1210	3150
1230	3350
1250	3550

Section XPA

Datum length L_d (mm)	
590	1280
610	1300
630	1320
640	1340
660	1360
670	1380
690	1400
710	1430
730	1450
750	1480
760	1500
780	1530
800	1550
820	1580
830	1600
850	1630
860	1650
880	1680
900	1700
910	1750
930	1800
950	1850
960	1900
980	1950
1000	2000
1030	2120
1060	2240
1090	2360
1120	2500
1140	2650
1150	2800
1180	3000
1210	3150
1230	3350
1250	3550

Section XPB

Datum length L_d (mm)	
1250	2240
1320	2360
1400	2500
1500	2650
1600	2800
1700	3000
1800	3150
1900	3350
2000	3550
2120	

Section XPC

Datum length L_d (mm)	
2000	2800
2120	3000
2240	3150
2360	3350
2500	3550
2650	

*Dimensions in FO®-N

The datum length L_d according to ISO 4184 comply the pitch length L_w according to DIN 2215

CONTI ULTRAFLEX®
narrow-section wrapped V-belts

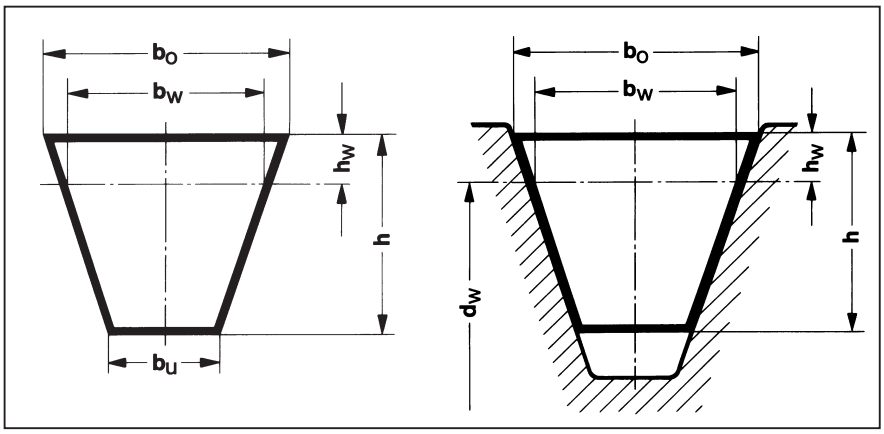

Belt dimensions Fig. 2

Dimensional data Table 5

Belt section DIN symbol B.S./ISO symbol		SPZ SPZ	SPA SPA	SPB SPB	SPC SPC
Top belt width $b_o \approx$	mm	9.7	12.7	16.3	22.0
Pitch width b_w	mm	8.5	11.0	14.0	19.0
Bottom belt width b_u	mm	4.0	5.6	7.1	9.3
Height of belt $h \approx$	mm	8	10	13	18
Pitch height $h_w \approx$	mm	2.0	2.8	3.5	4.8
Min. pulley pitch diameter $d_{w\,min}$ [1]	mm	63	90	140	224
Max. flexing frequency $f_{B\,max}$	s^{-1}	100	100	100	100
Max. belt speed v_{max}	m/s	40	40	40	40
Weight per metre	kg/m	0.073	0.100	0.178	0.380
Range of pitch length L_w [2] from	mm	512	647	1250	2000
to	mm	3550	4500	8000	12250
Length differential value from L_w $\Delta L = L_a - L_w$	mm	13	18	22	30

[1] d_w corresponds to the datum diameter d_d
[2] L_w corresponds to the datum length L_d

CONTI ULTRAFLEX® narrow-section wrapped V-belts complying with B.S. 3790 and DIN standard 7753 part 1 are used in demanding drive systems in all spheres of mechanical engineering. High power transmission capacity and economic efficiency coupled with a long service life are the result of long-term development and extensive practical experience. The high quality standard of this power transmission product is guaranteed by sophisticated testing equipment and test conditions.

Designation

CONTI ULTRAFLEX® SPZ 1400 stands for CONTI ULTRAFLEX® narrow-section wrapped V-belts in section SPZ with pitch length 1400 mm. It complies with DIN 7753 Part 1.

Construction

CONTI ULTRAFLEX® narrow-section wrapped V-belts are manufactured with fabric jackets and high strength, low-stretch polyester load-bearing members.

Properties

CONTI ULTRAFLEX® narrow section wrapped V-belts with their top width: height ratio of ≈ 1.2 guarantee high power transmission capacities with space saving drive systems, so that they are used for a wide range of applications in power transmission technology.

CONTI ULTRAFLEX® narrow-section wrapped V-belts in sections SPZ, SPA, SPB and SPC are series-manufactured in matched sets for pitch lengths L_w from 1000 mm (see page 6). There are no restrictions on putting together sets.

For new drives, consideration should be given to the possibility of using CONTI FO®-Z heavy-duty cogged raw edge V-belts.

CONTI ULTRAFLEX® narrow-section wrapped V-belts have the following standard features:
– moderate resistance to oil
– suitable for temperatures from –55 °C to 70 °C
– antistatic properties
– resistance to dust
– suitable for tropical climates

Special-duty types
MONTAN: approved for mining application by the State Mining Authority (LOBA).

LR: extra smooth running, e. g. for machine tools.

36: for drives with counter-flexing, e. g. jockey pulleys, from section SPA onwards.

VF: with reinforced tension member for high driving forces.

Explanations on standard properties and special-duty types are given in the section on "General data" (page 6).

Product range

CONTI ULTRAFLEX® narrow-section wrapped V-belts are manufactured in 4 sections to DIN standard 7753 part 1 for the mechanical engineering industry. Sections SPZ, SPA, SPB, SPC comply with B.S. 3790 and ISO 4184 and are used internationally.

CONTI ULTRAFLEX® narrow-section wrapped V-belts are designated according to the pitch length L_w. They are supplied in a range designed to meet practical requirements.

Drive calculation

Drives with CONTI ULTRAFLEX® narrow section wrapped V-belts are designed in accordance with the data set out in the chapter on "Calculation of V-belt drives". The calculation method is in line with internationally recognized principles.

The pitch length L_w is used for calculation. The difference between pitch length and readily measurable outside length L_a is given for each section by a fixed length differential value ΔL (cf. dimensional data, table 5).

The power ratings of CONTI ULTRAFLEX® narrow-section wrapped V-belts are in line with state-of-the-art technological development.

ContiTech application engineers are pleased to give advice on complex drive problems and series applications.

V-belt pulleys

CONTI ULTRAFLEX® narrow-section wrapped V-belts are designed for pulleys complying with DIN standard 2211.

Details are given in the chapter on "V-belt pulleys" (page 22).

Length available for CONTI ULTRAFLEX® narrow-section wrapped V-belts

Table 6

Section SPZ

Datum length L_d (mm)		Datum length L_d (mm)	
512	957	1347	2000
562	962	1362	2037
587	967	1387	2087
612	970	1400	2120
630	987	1412	2137
637	994	1420	2160
662	1000	1437	2187
670	1012	1462	2240
672	1024	1487	2262
677	1037	1500	2280
687	1047	1512	2287
697	1060	1520	2360
710	1077	1537	2410
722	1087	1562	2437
737	1112	1587	2487
750	1120	1600	2500
758	1127	1612	2540
762	1137	1637	2637
772	1147	1650	2650
787	1162	1662	2663
800	1171	1687	2800
812	1180	1700	2840
825	1187	1712	3000
837	1202	1737	3150
850	1212	1762	3170
862	1222	1778	3350
875	1237	1800	3550
887	1250	1812	
900	1262	1837	
912	1270	1850	
922	1287	1862	
927	1312	1887	
937	1320	1900	
947	1330	1937	
950	1337	1987	

Section SPA

Datum length L_d (mm)		Datum length L_d (mm)	
647	1225	1757	2582
707	1232	1782	2607
732	1250	1800	2632
757	1257	1807	2650
782	1272	1832	2682
800	1282	1857	2732
807	1300	1882	2782
832	1307	1900	2800
850	1320	1907	2832
857	1332	1932	2847
882	1357	1957	2882
900	1367	1982	2932
907	1375	2000	2982
925	1382	2032	3000
932	1400	2057	3032
950	1407	2082	3082
957	1425	2120	3150
967	1432	2132	3182
982	1457	2182	3282
1000	1482	2207	3350
1007	1500	2227	3550
1032	1507	2232	3650
1042	1525	2240	3750
1057	1532	2282	4000
1060	1557	2300	4250
1082	1582	2307	4500
1100	1600	2332	
1107	1607	2357	
1120	1632	2360	
1127	1657	2382	
1132	1675	2432	
1157	1682	2475	
1175	1700	2482	
1180	1707	2500	
1207	1732	2532	

Section SPB

Datum length L_d (mm)	
1250	3170
1320	3250
1340	3350
1360	3450
1400	3550
1410	3750
1450	3800
1472	3870
1500	4000
1600	4060
1700	4250
1778	4310
1800	4500
1860	4560
1900	4620
1950	4750
2000	4820
2020	4842
2098	5000
2120	5058
2150	5070
2240	5300
2264	5380
2280	5600
2310	5680
2360	6000
2391	6300
2410	6340
2430	6500
2500	6700
2518	7100
2530	7500
2650	8000
2680	
2800	
2840	
2900	
2990	
3000	
3070	
3150	

Section SPC

Datum length L_d (mm)	
2000	5300
2120	5600
2240	6000
2340	6300
2360	6700
2500	7100
2650	7500
2800	8000
3000	8500
3150	9000
3350	9500
3550	10000
3750	10600
4000	11200
4250	12000
4500	12250
4750	12500
5000	

The datum length L_d according to ISO 4184 comply the pitch length L_w according to DIN 7753

CONTI MULTIFLEX®
classical-section wrapped V-belts

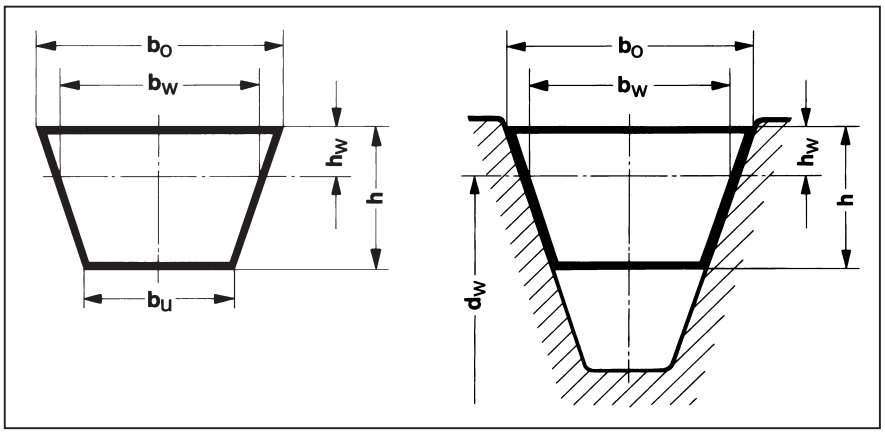

Belt dimensions Fig. 3

Dimensional data

Table 7

Belt section DIN symbol / B.S./ISO symbol		8 –	10 Z	13 A	17 B	20 –	22 C	25 –	32 D	40 E
Top belt width $b_o \approx$	mm	8	10	13	17	20	22	25	32	40
Pitch width b_w	mm	6.7	8.5	11.0	14.0	17.0	19.0	21.0	27.0	32.0
Bottom belt width $b_u \approx$	mm	4.6	5.9	7.5	9.4	11.4	12.4	14.0	18.3	22.8
Height of belt $h \approx$	mm	5	6	8	11	12.5	14	16	20	25
Pitch height $h_w \approx$	mm	2.0	2.5	3.3	4.2	4.8	5.7	6.3	8.1	12.0
Min. pulley pitch diameter $d_{w\,min}$	mm	35.5	45	71	112	140	180	224	315	450
Max. flexing frequency $f_{B\,max}$	s^{-1}	60	60	60	60	60	60	60	60	60
Max. belt speed v_{max}	m/s	30	30	30	30	30	30	30	30	30
Weight per metre	kg/m	0.040	0.060	0.105	0.170	0.240	0.300	0.430	0.630	0.970
Range of pitch length L_w from	mm	549	472	590	658	948	1142	1461	2075	5082
to	mm	1269	2522	5030	7143	6048	8052	9061	12575	11282
Length differential value from L_w $\Delta L = L_w - L_i$	mm	19	22	30	43	48	52	61	75	82

CONTI MULTIFLEX® classical-section wrapped V-belts, complying with B.S. 3790 and DIN Standard 2215 are designed for all industrial applications from precision engineering to heavy machine construction. Sophisticated production methods and high-grade materiale result in a power transmission product that offers maximum operating reliability even under critical conditions.

Designation

CONTI MULTIFLEX® 17 x 2000 L_i stands for a CONTI MULTIFLEX® classical-section wrapped V-belt in section 17/B with inside length 2000 mm. It complies with DIN 2215.

Construction

CONTI MULTIFLEX® classical-section wrapped V-belts are supplied with fabric jackets.

Properties

CONTI MULTIFLEX® classical-section wrapped V-belts are ideal for tough operating conditions on account of their top width: height ratio of = 1.6. They can also be used to advantage in V-flat drives. The smaller section belts are especially suitable for precision engineering.

CONTI MULTIFLEX® classical-section wrapped V-belts in sections 10/Z, 13/A, 17/B, 20/-, 22/C, 25/-, 32/D and 40/E are series-manufactured in matched sets for inside lengths from 1000 mm (see page 6). There are no restrictions on putting together sets.

New drive systems can frequently be designed more efficiently with space-saving CONTI FO®-Z heavy-duty cogged raw edge V-belts.

CONTI MULTIFLEX® V-belts have the following standard features:
– moderate resistance to oil
– suitable for temperatures from –55 °C to 70 °C
– antistatic properties
– resistance to dust
– suitable for tropical climates

Special-duty types
MONTAN: approved for mining application by the State Mining Authority (LOBA)

LR: extra smooth running, e.g. for machine tools

36: for drives with counter-flexing, e.g. jockey pulleys, from section 13/A onwards.

VF: with reinforced tension member for high torque drives. Explanations on standard properties and special-duty types are given in the section on "General data" (page 6).

Product range

CONTI MULTIFLEX® classical-section wrapped V-belts are standardized to DIN 2215 specifications. They also comply with B.S. 3790 and ISO 4184. The product range comprises 9 sections. Sections 5/- and 6/Y, which were previously produced in a wrapped version, have been superseded by higher-grade CONTI FO®-Z heavy-duty cogged raw edge V-belts (page 11).

CONTI MULTIFLEX® classical-section wrapped V-belts are designated with the inside length L_i. They are supplied in a range designed to meet practical requirements.

Available standard lengths are listed in table 8 (page 21).

Drive calculation

Drives with CONTI MULTIFLEX® classical-section wrapped V-belts are designed in accordance with the data set out in the chapter on "Calculation of V-belt drives". The calculation method is in line with internationally recognized principles.

The pitch length L_W, that is required for calculation is given for each section by a fixed length differential value ΔL (cf. dimensional data, table 7)

The power ratings of CONTI MULTIFLEX® classical-section wrapped V-belts are in line with state-of-the-art technological development and exceed the values laid down in DIN standard 2218 and B.S. 3790.

ContiTech application engineers are pleased to give advice without obligation on complex drive problems and series applications.

V-belt pulleys

CONTI MULTIFLEX® classical-section wrapped V-belts are designed for pulleys complying with DIN 2217 or DIN 2211 and B.S. 3790.

Details are given in the chapter on "V-belt pulleys" (page 23).

Length available for CONTI MULTIFLEX® classical-section wrapped V-belts

Table 8

Section 8/-		**Section 10/Z**						**Section 13/A**			
Inside length L_i (mm)	Datum length L_d (mm)	Inside length L_i (mm)	Datum length L_d (mm)	Inside length L_i (mm)	Datum length L_d (mm)	Inside length L_i (mm)	Datum length L_d (mm)	Inside length L_i (mm)	Datum length L_d (mm)	Inside length L_i (mm)	Datum length L_d (mm)
530	549	450	472	1080	1100	1750	1770	560	590	1120	1150
560	579	475	497	1105	1127	1780	1800	580	610	1143	1173
580	599	500	522	1120	1142	1800	1822	600	630	1168	1198
600	619	520	542	1150	1172	1830	1850	630	660	1180	1210
630	649	530	552	1170	1192	1850	1870	655	685	1200	1230
670	689	560	582	1180	1202	1900	1922	670	700	1220	1250
680	699	575	597	1194	1220	1975	2000	690	720	1250	1280
700	719	600	622	1215	1240	2000	2022	710	740	1270	1300
710	729	630	652	1230	1252	2080	2102	730	760	1300	1330
750	769	670	692	1250	1272	2120	2142	750	780	1320	1350
760	779	710	732	1270	1292	2240	2262	767	790	1346	1376
800	819	730	752	1300	1322	2360	2382	780	810	1372	1402
830	849	750	772	1320	1342	2500	2522	787	818	1400	1430
850	869	775	797	1346	1368			800	830	1422	1452
875	894	800	822	1371	1393			813	843	1448	1478
900	919	820	842	1400	1422			825	855	1475	1505
950	969	850	872	1450	1472			838	868	1500	1530
1000	1019	865	890	1475	1500			850	880	1525	1555
1020	1039	875	897	1500	1522			855	880	1550	1580
1050	1069	900	922	1525	1547			875	905	1575	1605
1200	1219	950	972	1550	1572			889	919	1600	1630
1250	1269	980	1002	1600	1622			900	930	1625	1655
		1000	1022	1626	1650			914	944	1651	1681
		1016	1040	1651	1673			925	955	1676	1706
		1030	1052	1680	1700			950	980	1700	1730
		1041	1060	1700	1722			965	995	1725	1755
		1060	1082	1730	1752			975	1005	1750	1780
								1000	1030	1780	1810
								1016	1046	1800	1830
								1030	1060	1825	1855
								1041	1071	1854	1884
								1060	1090	1880	1910
								1075	1105	1900	1930
								1090	1120	1930	1960
								1105	1135	1956	1986

The datum length L_d according to ISO 4184 comply the pitch length L_w according to DIN 7753

Length available for CONTI MULTIFLEX® classical-section wrapped V-belts

Table 8

Section 13/A

Inside length L_i (mm)	Datum length L_d (mm)
1980	2010
2000	2030
2010	2060
2030	2060
2040	2080
2057	2087
2083	2110
2100	2130
2120	2150
2134	2160
2150	2180
2184	2220
2200	2230
2240	2270
2261	2290
2285	2315
2311	2340
2337	2370
2360	2390
2388	2420
2413	2400
2435	2465
2475	2505
2500	2530
2540	2570
2591	2620
2650	2680
2667	2700
2730	2760
2743	2770
2800	2830
2840	2870
2946	2980
3000	3030
3050	3080
3150	3180
3250	3280
3302	3330
3350	3380
3404	3440
3454	3490
3550	3580
3650	3690
3750	3780
3886	3920
3912	3940
4000	4030
4250	4280
4470	4500
4750	4780
5000	5030

Section 17/B

Inside length L_i (mm)	Datum length L_d (mm)
615	658
650	690
670	713
686	725
710	753
725	765
750	793
762	800
775	818
800	843
825	868
838	880
850	893
875	918
889	930
900	943
925	968
950	993
965	1000
975	1018
1000	1043
1017	1060
1030	1073
1040	1080
1050	1090
1060	1103
1075	1118
1090	1133
1120	1163
1150	1193
1175	1218
1180	1228
1200	1243
1215	1258
1225	1268
1250	1293
1270	1313
1300	1343
1320	1363
1335	1375
1350	1393
1360	1400
1372	1415

Inside length L_i (mm)	Datum length L_d (mm)
1400	1443
1422	1465
1450	1493
1470	1513
1500	1543
1525	1568
1550	1593
1575	1618
1600	1643
1625	1668
1650	1693
1676	1719
1700	1743
1725	1768
1750	1793
1761	1804
1775	1818
1800	1843
1829	1870
1850	1893
1880	1923
1900	1943
1930	1973
1950	1993
1981	2020
2000	2043
2030	2070
2060	2103
2083	2126
2108	2151
2120	2163
2134	2180
2160	2203
2184	2230
2200	2243
2240	2283
2261	2304
2286	2329
2300	2343
2337	2380
2360	2403
2400	2443
2450	2493

Inside length L_i (mm)	Datum length L_d (mm)
2465	2500
2500	2543
2515	2560
2540	2583
2565	2610
2600	2643
2616	2660
2650	2693
2667	2710
2700	2743
2750	2793
2769	2810
2800	2843
2820	2860
2840	2883
2900	2940
2921	2960
2950	2993
3000	3043
3050	3093
3100	3140
3150	3193
3175	3220
3200	3243
3250	3293
3302	3345
3350	3393
3378	3420
3404	3450
3450	3493
3505	3550
3550	3593
3581	3620
3600	3650
3658	3701
3700	3743
3750	3793
3810	3850
3850	3893
3861	3900
3950	3993
4000	4043
4115	4160

Inside length L_i (mm)	Datum length L_d (mm)
4166	4210
4200	4243
4250	4293
4267	4310
4318	4360
4394	4437
4450	4493
4500	4543
4572	4615
4699	4740
4750	4793
4877	4920
4953	5000
5000	5043
5100	5140
5300	5343
5334	5370
5500	5540
5600	5643
5740	5780
6000	6043
6045	6070
6096	6240
6300	6343
6500	6540
6700	6743
7000	7043
7100	7143
8382	8430
8763	8810

Section 20/-

Inside length L_i (mm)	Datum length L_d (mm)
900	948
1000	1048
1060	1108
1120	1168
1180	1228
1215	1263
1250	1298
1275	1323
1320	1368
1400	1448
1450	1498
1500	1548
1600	1648
1660	1708
1700	1748
1900	1948
1950	1998
2000	2048
2060	2108
2120	2168
2240	2288
2360	2408
2500	2548
2650	2698
2800	2848
3000	3048
3150	3198
3350	3398
3550	3598
3750	3798
4000	4048
4250	4298
4500	4548
5000	5048
5300	5348
5500	5548
5600	5648
6000	6048
7100	7148
8000	8048

The datum length L_d according to ISO 4184 comply the pitch length L_w according to DIN 7753

Length available for CONTI MULTIFLEX® classical-section wrapped V-belts

Table 8

Section 22/C

Inside length L_i (mm)	Datum length L_d (mm)
1090	1150
1200	1260
1220	1275
1250	1302
1270	1320
1295	1350
1320	1372
1350	1410
1400	1452
1425	1480
1450	1510
1475	1530
1500	1552
1524	1576
1550	1600
1600	1652
1650	1700
1676	1730
1700	1752
1727	1780
1750	1810
1778	1830
1800	1852
1829	1880
1854	1910
1880	1940
1900	1952
1930	1980
1956	2010
1981	2030
2000	2052
2032	2090
2057	2109
2120	2172
2135	2190
2159	2211
2184	2240
2240	2292
2261	2320
2286	2338
2360	2412
2388	2440
2413	2465
2438	2490
2450	2502
2464	2520
2500	2552
2525	2577
2540	2600
2560	2620
2591	2643
2616	2670
2642	2700
2670	2722

Section 22/C

Inside length L_i (mm)	Datum length L_d (mm)
2685	2740
2750	2800
2800	2852
2819	2880
2840	2992
2900	2952
2950	3000
2965	3030
3000	3052
3030	3080
3050	3102
3099	3150
3150	3202
3200	3252
3250	3302
3302	3360
3350	3402
3404	3460
3454	3506
3505	3560
3550	3602
3607	3660
3658	3710
3700	3760
3750	3802
3850	3920
3912	3960
4000	4052
4020	4080
4064	4120
4115	4167
4216	4270
4250	4302
4390	4450
4500	4552
4540	4600
4572	4624
4699	4750
4750	4802
4826	4880
4953	5005
5000	5052
5131	5180
5182	5240
5300	5352
5334	5386
5500	5550
5600	5652
5639	5690
5700	5750
5715	5770
5800	5850
6000	6052
6045	6100

Section 22/C

Inside length L_i (mm)	Datum length L_d (mm)
6096	6148
6200	6250
6300	6352
6350	6400
6700	6752
6807	6860
6858	6910
7010	7060
7100	7152
7500	7552
7569	7520
7650	7700
8000	8052
8382	8430
8765	8820
9144	9200

Section 25/-

Inside length L_i (mm)	Datum length L_d (mm)
1400	1461
1500	1561
1700	1761
1800	1861
1900	1961
1950	2211
2000	2061
2050	2111
2120	2181
2200	2261
2240	2301
2450	2511
2500	2561
2540	2601
2650	2711
2800	2861
3000	3061
3150	3211
3250	3311
3350	3411
3550	3611
3750	3811
4000	4061
4250	4311
4500	4561
4750	4811
5000	5061
5300	5361
5600	5661
6000	6061
6300	6361
6700	6761
7100	7161
7500	7561
8000	8061
8500	8561
9000	9061

Section 32/D

Inside length L_i (mm)	Datum length L_d (mm)
2000	2075
2120	2200
2360	2435
2500	2575
2650	2725
2670	2740
2800	2875
3000	3075
3048	3123
3150	3225
3250	3330
3350	3425
3550	3625
3425	3500
3450	3530
3658	3730
3750	3825
3810	3890
3910	3990
3940	4020
4000	4075
4075	4160
4115	4190
4250	4325
4394	4470
4500	4575
4572	4650
4620	4700
4750	4825
4826	4900
4953	5030
5000	5075
5182	5260
5258	5330
5300	5375
5330	5400
5600	5675
5715	5790
5791	5670
5850	5939
6000	6075
6045	6120
6096	6171
6300	6375
6700	6775
6807	6890
7100	7175
7417	4790
7500	7575
7569	7650
7620	7700
8000	8075
8382	8460
8500	8575

Section 32/D

Inside length L_i (mm)	Datum length L_d (mm)
8760	8840
9000	9075
9093	9170
9500	9575
9754	9839
9906	9980
10617	10700
10000	10075
10700	10780
11200	11275
12141	12220
12500	12575
13460	13540

Section 40/E

Inside length L_i (mm)	Datum length L_d (mm)
5000	5082
5600	5682
7100	7182
8000	8082
9000	9082
10000	10082
11200	11282

The datum length L_d according to ISO 4184 comply the pitch length L_w according to DIN 7753

V-belt pulleys



Matched-length CONTI FO® heavy-duty cogged raw edge V-belts running on a ventilator drive

V-belt pulleys

The efficiency of a V-belt drive is influenced by the pulleys, which are standardized to B.S. 3790 and to DIN 2211 and DIN 2217 specifications.
These standard specifications are in line with the corresponding ISO standards.

V-belt pulleys are manufactured mainly from cast iron GG-20 or from other materials to customers' specifications in different constructions, e.g. one part or two part and as solid pulleys, bushed pulleys or spoked pulleys. Customers manufacturing their own pulleys should ensure that they comply with standard specifications.

Selection

– Select standardized pulley diameters if possible. The first column of the "Power Rating" tables (page 43 to 62) lists pulley pitch diameters of the small pulley d_{wk} selected from the range of standardized pulley diameters.
Details are given in table 2 of DIN standard 2211 part 1 and DIN standard 2217 part 1 respectively, as well as in B.S. 2790.

– Minimum pulley diameter should be adhered to.
Pulley diameters below the recommended dimensions affect the service life of the V-belt and consequently the economic efficiency of the drive.

– Select pulley diameter as large as possible.
Large pulley diameters have a positive effect on the service life of the V-belt. The maximum belt speed should not, however, be exceeded Cost-effectiveness should be checked in each individual case.

– Use balanced pulleys complying with DIN standard 2211 part 1 and B.S. 3790.
In general, quality index Q 16 to VDI standard 2060 applies to statically balanced pulleys
at $v = 30$ m/s für $d_w > 400$ mm or
at $n = 1500$ min^{-1} für $d_w \leqq 400$ mm.
The pulley is balanced without a key way on a smooth mandrel. Balancing can be performed to VDI standard 2060 with a key way but no key, either statically or dynamically. Quality index Q 6.3 for dynamic balancing is recommended if $V > 30$ m/s or the pitch diameter: pulley face width ratio, that is $d_w : b_2 < 4$ for $V > 20$ m/s.

– Use correct groove section.
V-belts must not run on the base of the groove, as this causes irreparable damage to the belt within a short time. The only exception to this rule is the V-flat drive.

– Allow for the correct groove angle.
The groove angle depends on the pitch diameter of the pulley. The values listed in standard specifications are based on practical experience.

Application

– Pulleys must be clean and free of burr. They must be correctly aligned.

– Damaged pulleys, e. g. pulleys with damage caused by uneven wear, should be replaced without delay.

Further information is given in the chapter on "Installation and Maintenance", page 75.

Pulleys for narrow-section and classical-section V-belts

Pulleys for narrow-section CONTI FO®-Z heavy-duty cogged raw edge V-belts and for CONTI ULTRAFLEX® narrow-section wrapped V-belts comply with DIN standard 2211 and B.S. 3790. Pulleys for classical-section CONTI FO®-Z heavy-duty cogged raw edge V-belts and for CONTI MULTIFLEX® classical-section wrapped V-belts in metric sections comply with DIN standard 2217.

The groove sections for single and multi-groove pulleys are illustrated in figs. 4 and 5; the groove dimensions are listed in tables 9 and 10.

Deep-groove pulleys

Deep-groove pulleys have extended grooves to provide a greater top groove width and groove depth. This enhances running properties considerably under special operating conditions. The belt runs more smoothly onto the pulley and is less susceptible to twisting and to slipping off the pulley.

Deep-groove pulleys are used to advantage
– as idler pulleys
– with vertical shafts
– with twisted drives
– with strongly oscillating drives.

The groove sections of one-groove and multi-groove deep-groove pulleys are shown in fig. 6 and the dimensions are given in table 11.

V-belt pulleys complying with B.S. 3790 and DIN standard 2211 Part 1 for CONTI FO® heavy-duty cogged raw edge V-belts and CONTI ULTRAFLEX® narrow-section wrapped V-belts

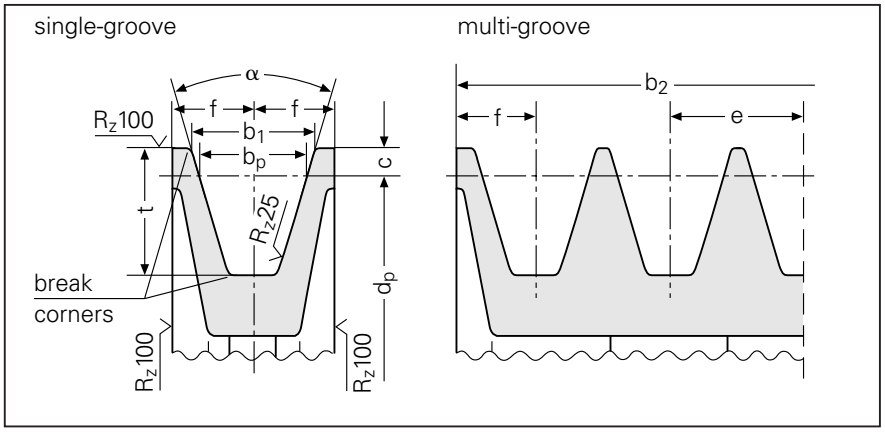

Groove section Fig. 4

Dimensions (in mm) Table 9

Belt section to DIN 7753 part 1 and B.S. 3790	DIN symbol B.S./ISO symbol		XPZ/SPZ SPZ	XPA/SPA SPA	XPB/SPB SPB	XPC/SPC SPC
Belt section to DIN 2215 and B.S. 3790	DIN symbol B.S./ISO symbol		10 Z	13 A	17 B	22 C
Pitch width[1]		b_w	8.5	11.0	14.0	19.0
Top groove width		$b_1 \approx$	9.7	12.7	16.3	22.0
		c	2.0	2.8	3.5	4.8
Groove spacing		e	12 ± 0.3	15 ± 0.3	19.0 ± 0.4	25.5 ± 0.5
		f	8 ± 0.6	10 ± 0.6	12.5 ± 0.8	17.0 ± 1.0
Groove depth		t	$11^{+0.6}_{0}$	$14^{+0.6}_{0}$	$18^{+0.6}_{0}$	$24^{+0.6}_{0}$
α 34°	for pitch diameter[2]	d_w	≦ 80	≦ 118	≦ 190	≦ 315
38°			> 80	> 118	> 190	> 315
Tolerance for α = 34°–38°			± 1°	± 1°	± 1°	± 30′
Pulley face width b_2 for number of grooves z $b_2 = (z-1) \cdot e + 2 \cdot f$		1	16	20	25	34
		2	28	35	44	59.5
		3	40	50	63	85
		4	52	65	82	110.5
		5	64	80	101	136
		6	76	95	120	161.5
		7	88	110	139	187
		8	100	125	158	212.5
		9	112	140	177	238
		10	124	155	196	263.5
		11	136	170	215	289
		12	148	185	234	314.5

1) b_w corresponds to the datum width b_r
2) d_w corresponds to the datum diameter d_r

V-belt pulleys complying with DIN standard 2217 Part 1 for CONTI FO®-Z heavy-duty cogged raw edge V-belts and CONTI MULTIFLEX® classical-section wrapped V-belts

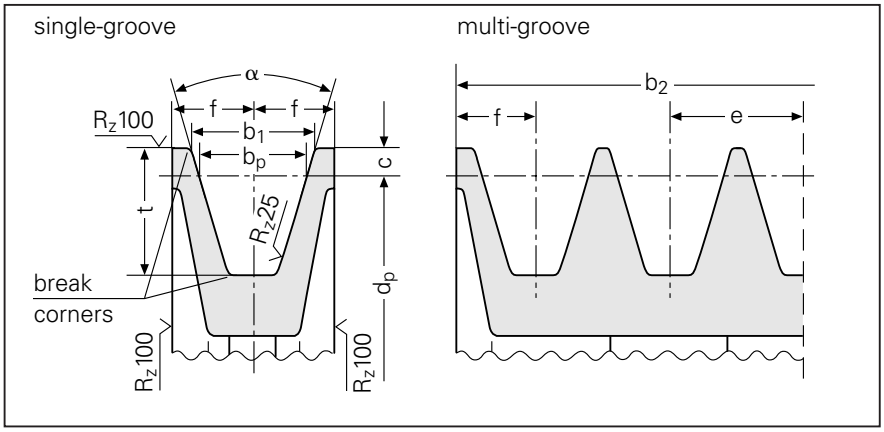

Groove section Fig. 5

Dimensions (in mm) Table 10

Belt section to DIN 7715 / DIN symbol / B.S./ISO symbol			5 – –	6 Y –	(8) – –	10 Z SPZ XPZ	13 A SPA XPA	17 B SPB XPB	(20) – –	22 C SPC XPC	(25) – –	32 D –	40 E –
Alternative section DIN 2211 Part 1 and B.S. 3790			–	–	–	SPZ XPZ	SPA XPA	SPB XPB	–	SPC XPC	–	–	–
Pitch width		b_w	4.2	5.3	6.7	8.5	11.0	14.0	17.0	19.0	21.0	27.0	32.0
Top groove width		$b_1 \approx$	5.0	6.3	8.0				20.0		25.0	32.0	40.0
		c	1.3	1.6	2.0				5.1		6.3	8.1	12.0
Groove spacing		e	$6^{\pm 0.3}$	$8^{\pm 0.3}$	$10^{\pm 0.3}$				$23^{\pm 0.4}$		$29^{\pm 0.5}$	$37^{\pm 0.6}$	$44^{\pm 0.3}$
		f	$5^{\pm 0.5}$	$6^{\pm 0.5}$	$7^{\pm 0.6}$				$15^{\pm 0.8}$		$19^{\pm 1}$	$24^{\pm 2}$	$29^{\pm 2}$
Groove depth		t	$6^{+0.6}_{0}$	$7^{+0.6}_{0}$	$9^{+0.6}_{0}$				$18^{+0.6}_{0}$		$22^{+0.6}_{0}$	$28^{+0.6}_{0}$	$33^{+0.6}_{0}$
α	32°	for pitch diameter d_w	≦50	≦63	≦75				–		–	–	–
	34°		–	–	–				≦250		≦355	–	–
	36°		50	63	75				–		–	≦500	≦630
	38°		–	–	–				>250		>355	>500	>630
Tolerance for α = 34°–38°			±1°	±1°	±1°				±1°		±30′	±30′	±30′
Pulley face width b_2 for number of grooves z $b_2 = (z-1) \cdot e + 2 \cdot f$		1	10	12	14				30		38	48	58
		2	16	20	24				53		67	85	102.5
		3	22	28	34				76		96	122	147
		4	28	36	44				99		125	159	191.5
		5	34	44	54				122		154	196	236
		6	40	52	64				145		183	233	280.5
		7		60	74				168		212	270	325
		8			84				191		241	307	369.5
		9							214		270	344	414
		10							237		299	381	458.5
		11							260		328	418	503
		12							283		357	455	547.5

Pulleys for narrow-section V-belts (DIN 2211 Part 1 and B.S. 3790) must be used for drives with these sections.

Cf. columns SPZ SPA SPB

Sections in brackets should not be used for new constructions.

Deep-groove Pulleys

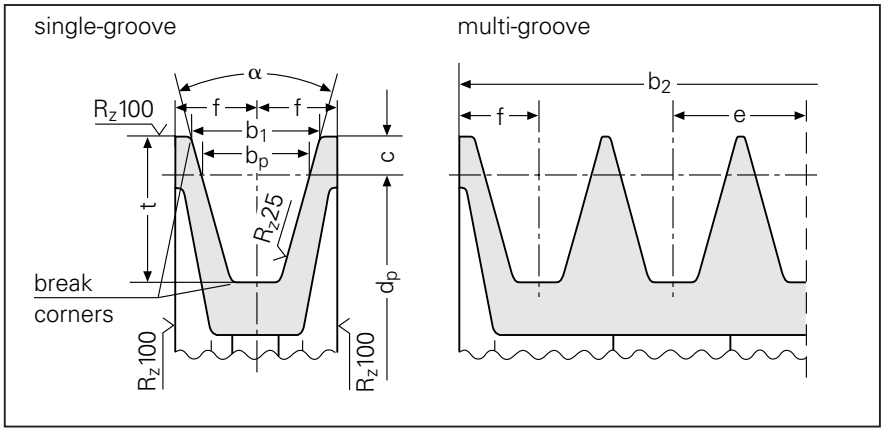

Groove section Fig. 6

Dimensions (in mm) Table 11

Belt section tp DIN 7753 part 1 and B.S. 3790 / Belt section to DIN 2215 and B.S. 3790			DIN symbol / B.S./ISO symbol	XPZ/SPZ SPZ 10 Z	XPA/SPA SPA 13 A	XPB/SPB SPB 17 B	XPC/SPC SPC 22 C
Pitch width			b_w	8.5	11.0	14.0	19.0
Increased groove width $b_1 \approx$		$\alpha = 34°$		11.0	15.0	18.9	26.3
		$\alpha = 38°$		11.3	15.4	19.5	27.3
			c	4.0	6.5	8.0	12.0
Groove spacing			e	14 ± 0.3	18 ± 0.3	23 ± 0.4	31 ± 0.5
			f	9.0 ± 0.6	11.5 ± 0.6	14.5 ± 0.8	20.0 ± 1.0
Increased groove depth			t_{min}	13.0	18.0	22.5	31.5
α	34°	for pitch diameter narrow-section V-belts DIN 7753 part 1	d_w	63 to 80	90 to 118	140 to 190	224 to 315
	38°			> 80	> 118	> 190	> 315
α	34°	for pitch diameter classical-section V-belts DIN 2215	d_w	50 to 80	71 to 118	112 to 190	180 to 315
	38°			> 80	> 118	> 190	> 315
Tolerance for $\alpha = 34°–38°$				± 1°	± 1°	± 1°	± 30′
Pulleys for b_2 for number of grooves z $b_2 = (z-1) \cdot e + 2 \cdot f$			1	18	23	29	40
			2	32	41	52	71
			3	46	59	75	102
			4	60	77	98	133
			5	74	95	121	164
			6	88	113	144	195
			7	102	131	167	226
			8	116	149	190	257
			9	130	167	213	288
			10	144	185	236	319
			11	158	203	259	350
			12	172	221	282	381

Minimum pulley diameter must be adhered to.
Not to be used for banded V-belts.

Calculation of V-belt drives

Symbols, units, terms

Design data
Power ratings P_R for:
CONTI FO®-Z
CONTI ULTRAFLEX®
CONTI MULTIFLEX®

Example of calculation
Two-pulley drive

Example of calculation
V-flat drive

ContiTech calculation service



CONTI FO®-Z heavy-duty cogged raw edge V-belts on a machine tool

Calculation of V-belts drives

The calculation refers to drives equipped with CONTI FO®-Z, CONTI ULTRAFLEX® and CONTI MULTIFLEX®. The calculation method is in line with internationally recognized principles.

ContiTech engineering specialists will be pleased to give advice without obligation on complex drive problems and series applications.

Drives can also be calculated and optimum solutions obtained by means of computer programs.

Symbols, units, terms

Symbol	Unit	Term
a	mm	Centre distance
a_{max}	mm	Max. permissible centre distance
a_{min}	mm	Min. permissible centre distance
A	cm^2	Area of belt in contact with pulley in V-flat drives
b_u	mm	Bottom width of belt for determining aera of belt in contact with pulley in V-flat drives
c_1		Arc of contact factor
c_2		Service factor
c_{2er}		Calculated service factor
c_3		Belt length correction factor
d_g	mm	Diameter of flat pulley in V-flat drives
d_w	mm	Pitch diameter of V-belt pulley
d_{w1}	mm	Pitch diameter of driving pulley
d_{w2}	mm	Pitch diameter of driven pulley
d_{wg}	mm	Pitch diameter of large pulley
d_{wk}	mm	Pitch diameter of small pulley
d_z	mm	Allowance for determining pitch diameter in V-flat drives
f_B	s^{-1}	Belt flex frequency
F	N	Static belt tension
F_{dyn}	N	Dynamic axle load
F_e	N	Belt tension test force
F_u	N	Effective pull
F_v	N	Axle load
h	mm	Heigth of belt
i		Transmission ratio
k		Number of pulleys in a drive
k_1		Belt tension factor
k_2		Centifugal force factor
L_a	mm	Outside length (reference length) of belt
L_e	mm	Reference length of belt
L_f	mm	Free span length
L_i	mm	Inside length of belt
L_w	mm	Pitch length of belt
n_1	min^{-1}	Speed of driving pulley
n_2	min^{-1}	Speed of driven pulley
n_g	min^{-1}	Speed of large pulley
n_k	min^{-1}	Speed of small pulley

Symbol	Unit	Term
p_{Fu}	N/cm^2	Tensioning capacity at pulley in V-flat drives
P	kW	Power to be transmitted
P_R	kW	Power rating per belt
t_e	mm	Belt tension test deflection
v	m/s	Belt speed
x	mm	Positve centre adjustment for take up
y	mm	Positve centre adjustment for belt installation
z		Number of belts required
z_{er}	mm	Calculated number of belts required
α	° (Grad)	Angle of side incination $\alpha = 90 - \frac{\beta}{2}$
β	° (Grad)	Arc of contact around small pulley

Design data

The enclosed design data contains the data, formulae and tables required for calculation of V-belt drives. Values that can be easily computed by means of the given formulae are not included in the tables.

Arc of contact factor c_1

For smaller arcs of contact, the arc of contact factor c_1 corrects the power rating P_R. The corresponding values are listed in the "Power rating" tables for an arc of contact $\beta = 180°$ around the small pulley.

$$c_1 = \frac{1}{4}\left[1 - 5\left(-\frac{\beta}{180}\right)\right]$$

Arc of contact factor c_1 — Table 12

$\frac{d_{bg} - d_{bk}}{a}$	Arc of contact β ° (degrees)	Arc of contact factor c_1
0	180	1.00
0.05	177	0.99
0.10	174	0.99
0.15	171	0.98
0.20	169	0.97
0.25	166	0.97
0.30	163	0.96
0.35	160	0.95
0.40	157	0.94
0.45	154	0.94
0.50	151	0.93
0.55	148	0.92
0.60	145	0.91
0.65	142	0.90
0.70	139	0.89
0.75	136	0.88
0.80	133	0.87
0.85	130	0.86
0.90	127	0.85
0.95	123	0.83
1.00	120	0.82
1.05	117	0.81
1.10	113	0.80
1.15	110	0.78
1.20	106	0.77
1.25	103	0.75
1.30	99	0.73
1.35	95	0.72
1.40	91	0.70
1.45	87	0.68

Sevicer factor c_2

The service factor c_2 takes into account the daily service period and the type of drive units and driven machines. The values stated are recommended values and should be increased in special cases, e.g. for drives with a high starting torque, a high starting frequency, high dynamic loading or acceleration.

ContiTech application engineers will be pleased to give advice in cases of doubt.

Sevice factor c_2

Table 13

		Types of driving units: Single-phase and three phase AC motors with normal torque (up to 2 x rated torque), e.g. synchronous and single-phase motors with split-phase starting, three-phase AC motors with full-voltage, star-delta or slip-ring starter; DC shunt-wound motors; internal combustion engines and turbines with $n > 600\ min^{-1}$			Single-phase and three-phase AC motors with hign torque (above 2 x rated torque), DC series-wound and compound-wound motors; internal combustion engines and turbines with $n < 600\ min^{-1}$.		
		Daily operating period			Daily operating period		
	Types of driven machines	10 hours or less	over 10 to 16 hours inclusive	over 16 hours	10 hours or less	over 10 to 16 hours inclusive	over 16 hours
Light-duty	Centrifugal pumps and compressors ligth-duty conveyor belts, fans and pumps up to 7.5 kW.	1	1.1	1.2	1.1	1.2	1.3
Medium-duty	Plate shears, presses, heavy-duty chain conveyors and conveyor belts, oscillating screens, generators and existers, automatic kneaders, machine tools (turning and grinding machines), laundry machines, printing machines, fans and pumps over 7.5 kW	1.1	1.2	1.3	1.2	1.3	1.4
Heavy-duty	Grinding gear, reciprocating piston compressors, heavy-duty overshot loaders an reciprocating conveyors (worm conveyors, apro conveyors, bucket elevators, shovel loaders), elevators, briquetting presses, textile machines, paper-making machines, pisten pumps, dredging pumps, reciprocating saws, hammer mils.	1.2	1.3	1.4	1.4	1.5	1.6
Extra heavy-duty	heavy-duty grinding gear, rock crushers, calenders, mixers, winches, cranes, excavators.	1.3	1.4	1.5	1.5	1.6	1.8

Length correction factor c_3

The length correction factor c_3 takes into account the number of flexing cycles as a function of belt length.

The c_3 values are listed on pages 41 to 60 together with the power ratings and the standard lengths available for each belt type and section.

Selecting the belt section

Figs. 7 to 11 are designed to help the customer/design engineer select the most suitable V-belt, using the power to be transmitted by the V-belt drive P, corrected by the service factor c_2, and the speed of the small pulley. Each section is identified by its own colour.

The approximate power transmission capacity of each V-belt can be read off as a function of pitch diameter and speed of the small pulley. The section with the highest power transmission capacity should be selected.

In the borderline area of two sections it is advisable to design the drive system with the next section downwards if the pulley diameters are identical.

The precise power transmission capacity cannot be read from these charts. Subsequent calculation using the corresponding formulae and tables is essential.

Selection of the largest possible pulley diameter permits optimum power utilization and economic efficiency. The maximum permissible belt speeds for each section must be taken into account.

CONTI FO®-Z heavy-duty cogged raw edge V-belts are recommended for new constructions in the mechanical engineering industry, owing to their economic efficiency and low structural volume.

CONTI FO®-Z heavy-duty cogged raw edge V-belts 5 — 6 — 8 —

Fig. 7

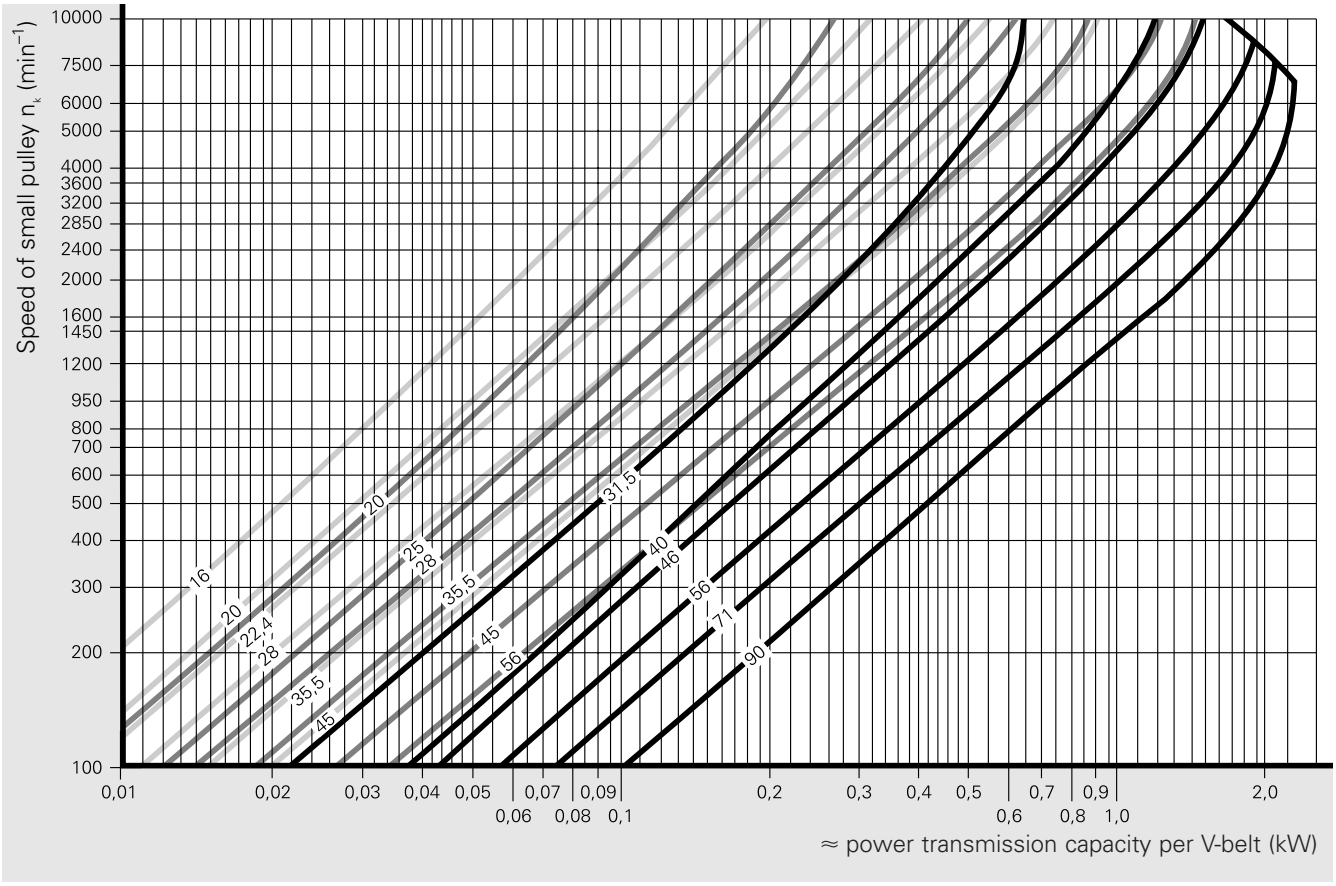

CONTI FO®-Z heavy-duty cogged raw edge V-belts XPZ XPA XPB XPC Fig. 8

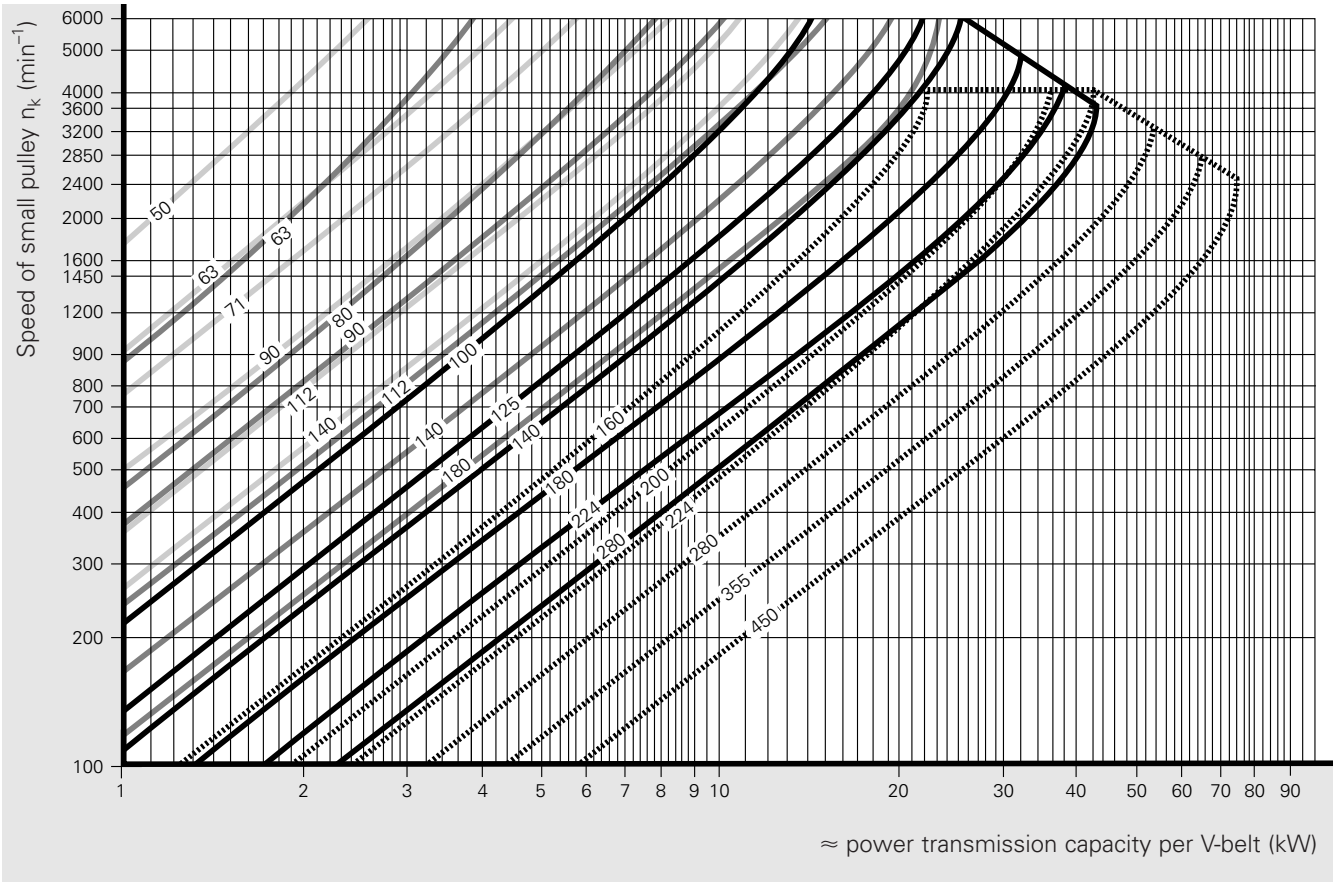

CONTI ULTRAFLEX® narrow-section wrapped V-belts SPZ SPA SPB SPC Fig. 9

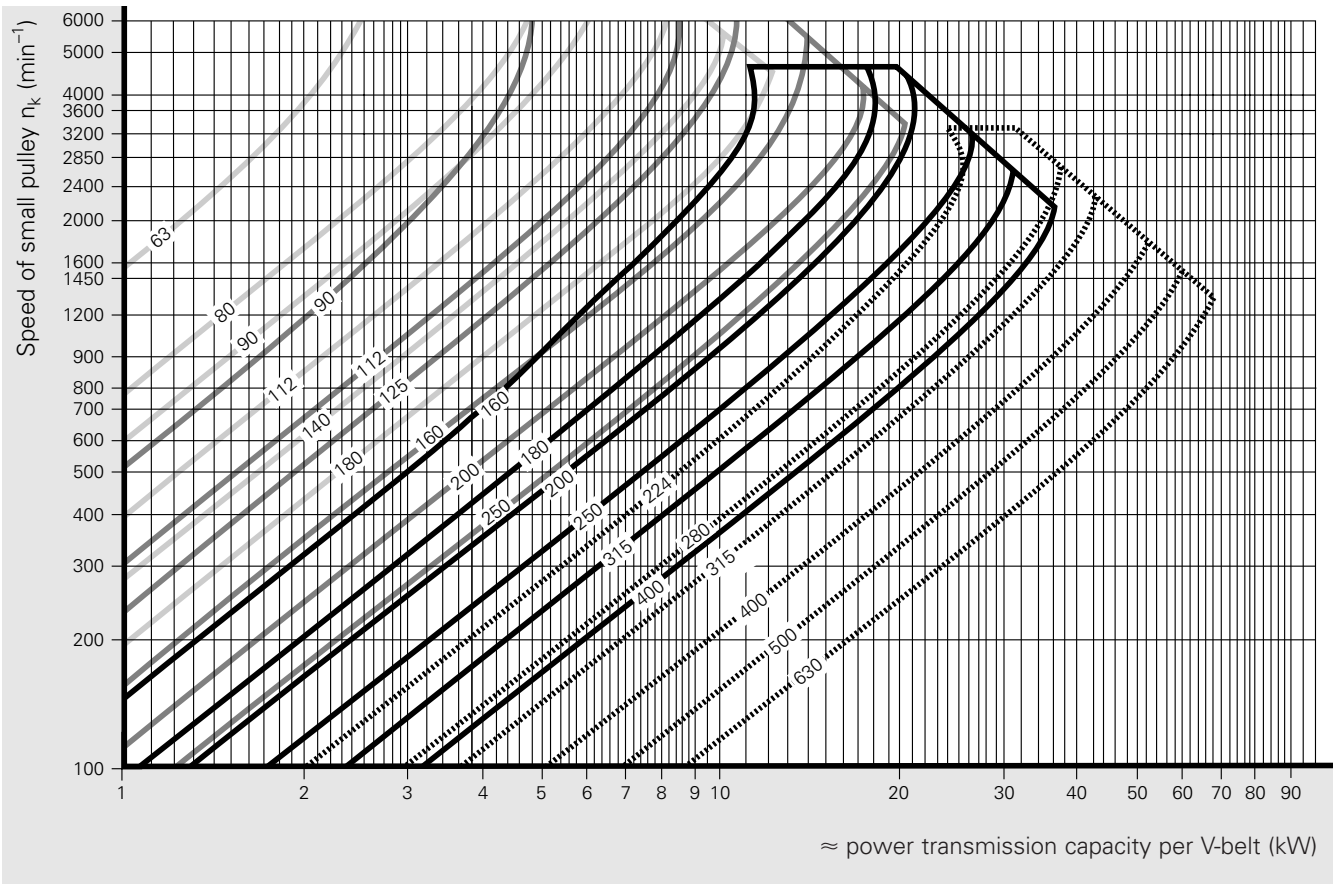

CONTI MULTIFLEX® classical-section wrapped V-belts 10/Z — 13/A — 17/B — Fig. 10

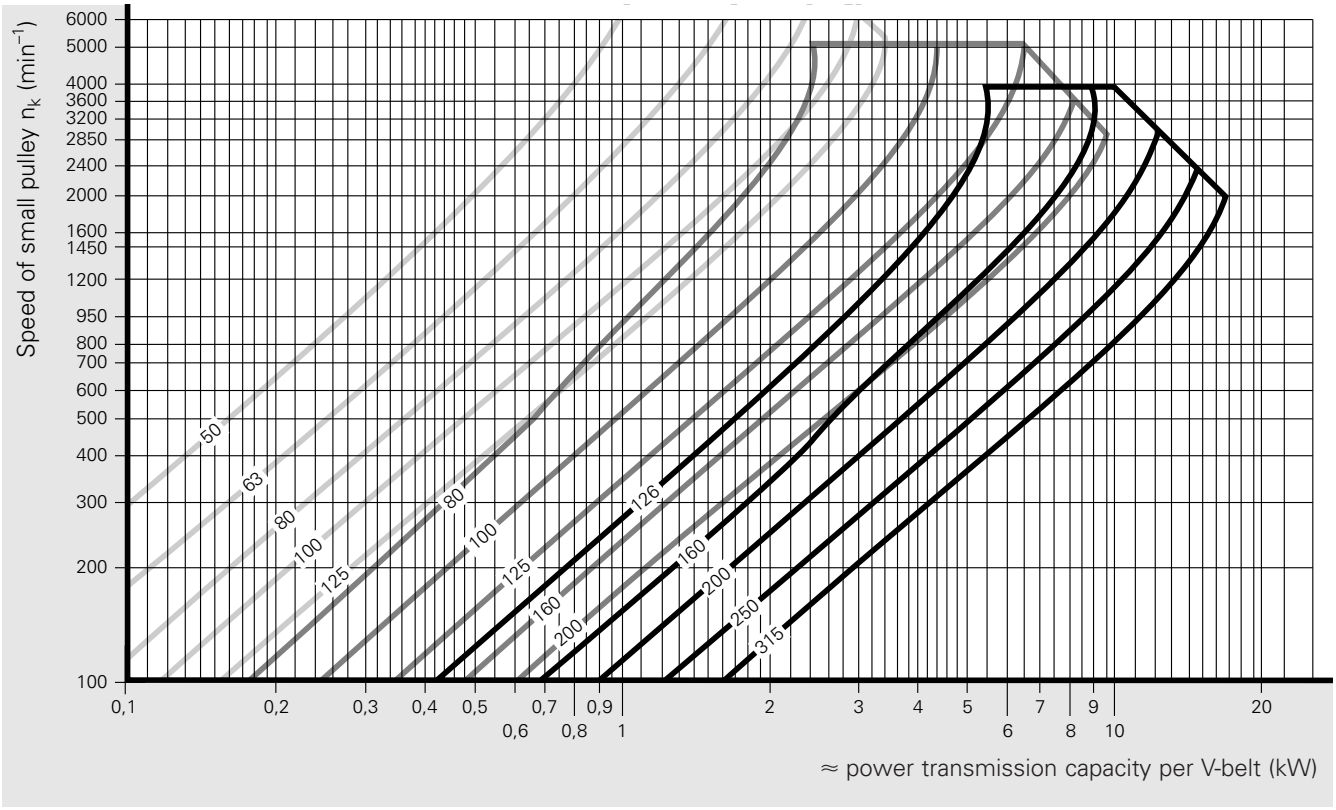

CONTI MULTIFLEX® classical-section wrapped V-belts 22/C — 32/D — 40/E — Fig. 11

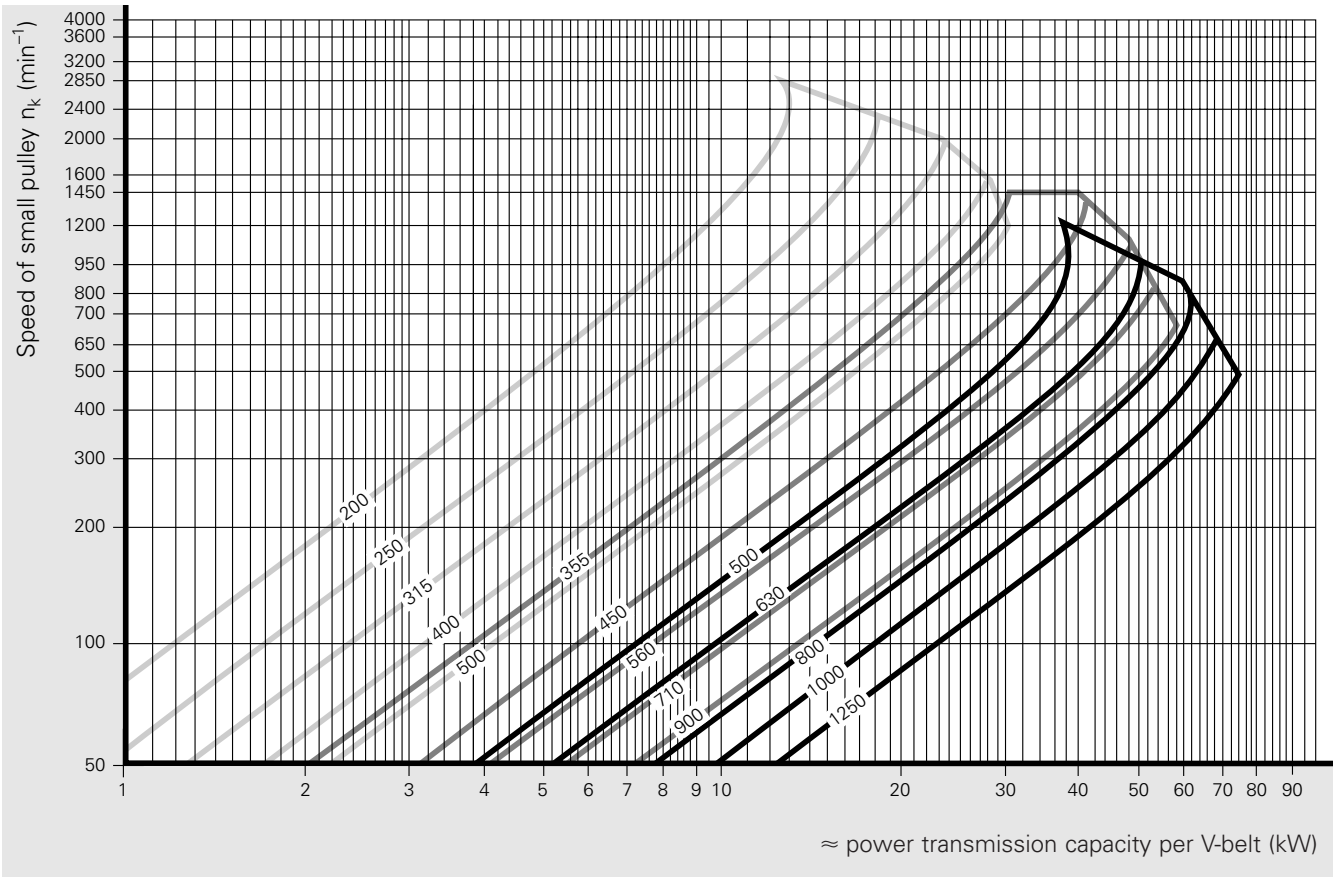

Centre distance a
The centre distance a is calculated using the following formula:

$$a = \frac{1}{4} \cdot \left(L_w - \frac{d_{wg} + d_{wk}}{2} \cdot \pi \right) + \frac{1}{4} \cdot \sqrt{\left(L_w - \frac{d_{wg} + d_{wk}}{2} \cdot \pi \right)^2 - 2 \cdot (d_{wg} - d_{wk})^2} \quad \text{mm}$$

The following applies if the transmission ratio i = 1:

$$a = \frac{L_w - \pi \cdot d_{wk}}{2} \quad \text{mm}$$

The following formula is recommended for selecting the centre distance in new constructions:

$$0{,}7 \cdot (d_{wg} + d_{wk}) \leqq a \leqq 2 \cdot (d_{wg} + d_{wk}) \quad \text{mm}$$

Deviations are feasible to allow for structural requirements.

Pitch length L_w
The pitch length L_w of the V-belt for a 2-pulley drive is approximately:

$$L_w \approx 2 \cdot a + \frac{\pi}{2} \cdot (d_{wg} + d_{wk}) + \frac{(d_{wg} - d_{wk})^2}{4 \cdot a} \quad \text{mm}$$

and precisely:

$$L_w = 2 \cdot a \cdot \sin \frac{\beta}{2} + \frac{\pi}{2} \cdot (d_{wg} + d_{wk}) + \frac{\pi}{180} \cdot \left(90 - \frac{\beta}{2} \right) \cdot (d_{wg} - d_{wk}) \quad \text{mm}$$

The pitch length L_w is converted to other lengths with the length differential values ΔL. These values are listed in the dimensional data (tables 3, 5, 7, pages 11, 15, 18) for the different belt types and sections.

Arc of contact β
The arc of contact β around the small pulley is:

$$\beta = 2 \cdot \arccos \left(\frac{d_{wg} - d_{wk}}{2 \cdot a} \right) \quad \text{°(degrees)}$$

The following is an approximate formula for arc contact $\beta > 110°$:

$$\beta \approx 180 - 60 \cdot \left(\frac{d_{wg} - d_{wk}}{a} \right) \quad \text{°(degrees)}$$

Positive centre adjustment x / negative centre adjustment y
The positive centre adjustment x is required for takeup, and negative centre adjustment y for installation of the belt.

The positive centre adjustment x for CONTI FO®-Z heavy-duty cogged raw edge V-belts is

$$x = \frac{0.01 \cdot L_w}{\sin\frac{\beta}{2}} \quad mm$$

and for conventional wrapped V-belts:

$$x = \frac{0.015 \cdot L_w}{\sin\frac{\beta}{2}} \quad mm$$

The negative centre adjustment y is

$$y = \frac{0.005 \cdot L_w + \pi \cdot h \cdot \frac{\beta}{360}}{\sin\frac{\beta}{2}} \quad mm$$

Belt speed v
The belt speed v is calculated from the diameter d_w in mm and the speed n in min^{-1} of the pulley:

$$v = \frac{\pi \cdot d_w \cdot n}{60 \cdot 10^3} \quad m/s$$

Account must be taken of the max. recommended speeds for the various types of V-belt (cf. dimensional data, tables 3, 5, 7, pages 11, 15, 18).

Fig. 27 (page 80) facilitates determination of the belt speed.

Belt flex frequency f_B
The belt flex frequency f_B is calculated from the belt speed v in m/s, the number of pulleys k and the pitch length L_w in mm:

$$f_B = \frac{10^3 \cdot v \cdot k}{L_w} \quad s^{-1}$$

The max. belt flex frequency should not exceed the values listed in the dimensional data (tables 3, 5, 7, pages 11, 15, 18).

Number of belts z
The number of belts z_{er} is calculated from the power to be transmitted P and factors c_1, c_2 and c_3

$$z_{er} = \frac{P \cdot c_2}{P_R \cdot c_1 \cdot c_3}$$

The number of belts actually used z is obtained in general by rounding up z_{er} to the next highest whole number.

When rounding up, check whether the service factor c_2 is still adequate.

ContiTech application engineers will be pleased to give advice in cases of doubt.

Axle load F_v
The axle load F_v is, as in all friction transmission drives, a decisive criterion for the efficiency and the service life of a V-belt drive.

– Insufficient belt tension results in inadequate power transmission, reduced efficiency and premature belt damage due to slip.

– Excessive belt tension leads to high specific surface pressure, a risk of cross flexing, increased flexing stress and increased strain on the tension members with consequent premature fractures and elongation.
Excessive V-belt tension also results frequently in damage to shaft bearings.

For this reason the belt tension required for the specific load must be determined and adhered to as closely as possible on installation.

Calculation
The axle load for two-pulley drives can be calculated from:

$$F_v = (k_1 \cdot F_u + 2 \cdot k_2 \cdot v_2 \cdot z) \cdot \sin \frac{\beta}{2} \quad N$$

The dynamic wave loading needed for dimensioning purposes is derived from:

$$F_{dyn} = k_1 \cdot F_u \cdot \sin \frac{\beta}{2} \quad N$$

whereby:

$$F_u = \frac{P \cdot 10^3}{v} \quad N$$

z is here the number of single belts in a set.

The belt tension factor k_1 must be applied in line with the specific service conditions (table 14, page 40).

Belt tension factor k_1

Table 14

ß ° (degrees)	Service conditions Light-duty drives Constant load	Medium load	Heavy-duty drives High dynamic lading High starting fequency
180	1.50	1.70	1.90
175	1.53	1.73	1.93
170	1.56	1.76	1.96
165	1.59	1.79	1.99
160	1.63	1.83	2.03
155	1.67	1.87	2.07
150	1.71	1.91	2.11
145	1.75	1.95	2.15
140	1.80	2.00	2.20
135	1.85	2.05	2.25
130	1.91	2.11	2.31
125	1.97	2.17	2.37
120	2.04	2.24	2.44
115	2.11	2.31	2.51
110	2.19	2.39	2.59
105	2.28	2.48	2.68
100	2.38	2.58	2.78
95	3.49	2.69	2.89
90	3.62	2.82	3.02

The centrifugal force factor k_2 is given in table 15.

Centrifugal force factor k_2

Table 15

CONTI FO®-Z heavy-duty cogged raw edge V-belts

Section	5/–	6/Y	8/–	XPZ	XPA	XPB	XPC
Centrifugal force factor k_2	0.015	0.023	0.041	0.072	0.112	0.192	0.370

CONTI ULTRAFLEX® narrow-section wrapped V-belts

Section	SPZ	SPA	SPB	SPC
Centrifugal force factor k_2	0.073	0.100	0.178	0.380

CONTI MULTIFLEX® classical-section wrapped V-belts

Section	8/–	10/Z	13/A	17/B	20/–	22/C	25/–	32/D	40/E
Centrifugal force factor k_2	0.040	0.060	0.105	0.170	0.240	0.300	0.430	0.630	0.970

For the setting of the belt tension, the static belt tension F must first be determined:

$$F = \frac{F_v}{2 \cdot z \cdot \sin\frac{\beta}{2}} \quad N$$

The static belt tension F is also given in table 59 (cf. V-belt maintenance, page 78). This table is of advantage particularly in the maintenance of existing drives.

Controlling the belt tension

The determined static belt tension F can be set in accordance with figs. 14 to 17. Please refer to the example calculation for two-pulley drives (page 63).



V-belt tension gauge Fig. 13

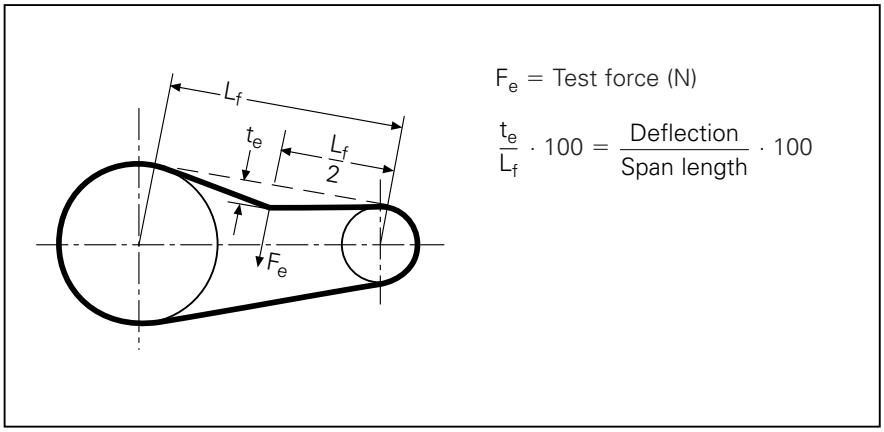

Deflection t_e Fig. 12

Measurement of the belt tension is facilitated by appropriate gauges, e.g. the ContiTech V-belt tension gauge (fig. 13). This gauge is used to measure the belt deflection that is derived from the calculated axle load F_v.

Further information on practical application is given in the chapter on "Installation, maintenance and storage of V-belts".

Belt tension graphs for
CONTI FO®-Z
heavy duty cogged raw edge V-belts Fig. 14

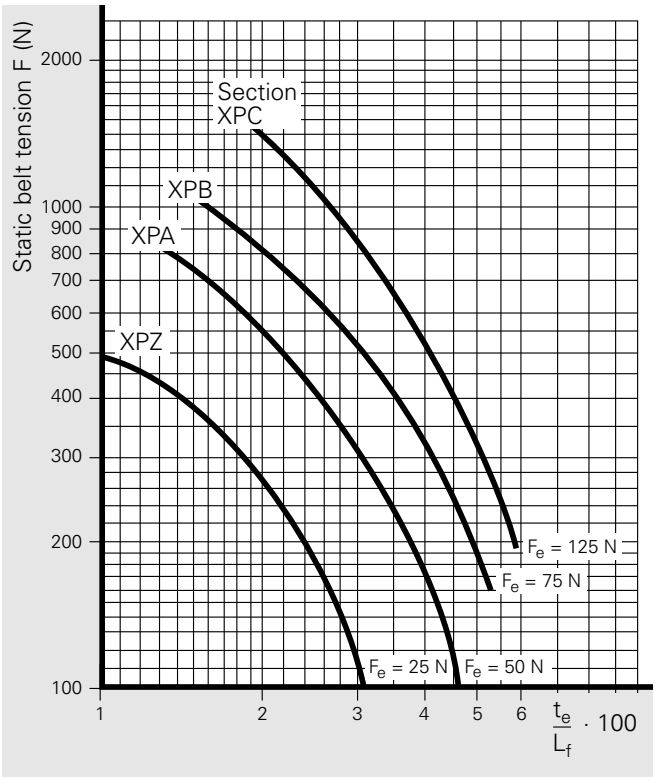

Belt tension graphs for
CONTI ULTRAFLEX®
narrow-section wrapped V-belts Fig. 15

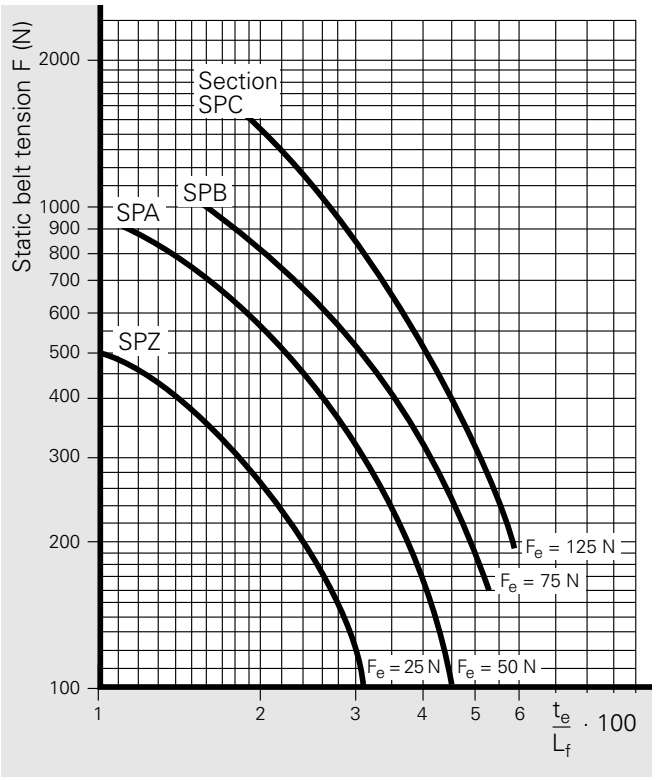

Belt tension graphs for
CONTI FO®-Z
V-belts Fig. 16

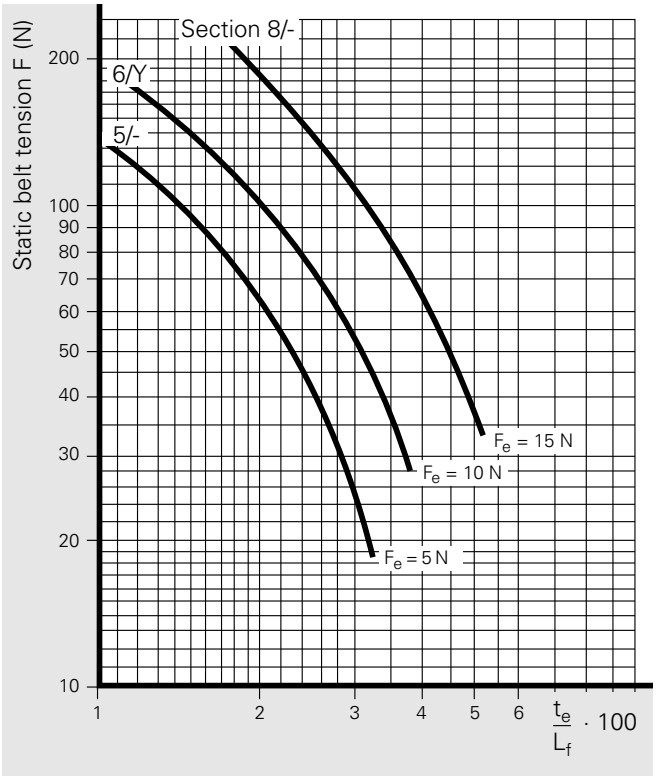

Belt tension graphs for
CONTI MULTIFLEX®
classical-section wrapped V-belts Fig. 17

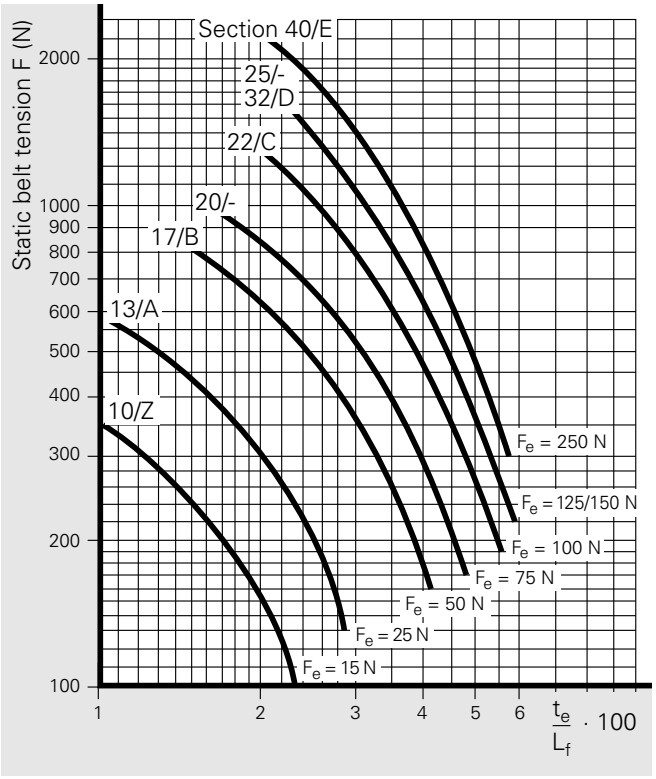

CONTI FO®-Z 5/–

Power rating P_R

Power rating P_R (kW) for a V-belt as a function of small pulley pitch diameter d_{wk}, transmission ratio i, small pulley speed n_k and pitch length L_w = 311 mm.
Min. pulley diameter $d_{b\,min}$ = 16 mm.

CONTI FO®-Z 5/– Table 16

d_{wk} (mm)	i or 1:i	Speed of small pulley n_k (min^{-1})																	
		200	400	**700**	800	**950**	1200	**1450**	1600	2000	2400	**2850**	3200	3600	4500	6000	8000	10000	12000
16.0	1.00	0.01	0.02	**0.03**	0.03	**0.03**	0.04	**0.04**	0.05	0.06	0.06	**0.07**	0.08	0.09	0.10	0.12	0.15	0.17	0.18
	1.05	0.01	0.02	**0.03**	0.03	**0.03**	0.04	**0.05**	0.05	0.06	0.07	**0.08**	0.08	0.09	0.11	0.13	0.15	0.17	0.19
	1.20	0.01	0.02	**0.03**	0.03	**0.03**	0.04	**0.05**	0.05	0.06	0.07	**0.08**	0.09	0.10	0.11	0.14	0.17	0.19	0.21
	1.50	0.01	0.02	**0.03**	0.03	**0.04**	0.04	**0.05**	0.05	0.06	0.07	**0.08**	0.09	0.10	0.12	0.15	0.18	0.20	0.22
	3.00	0.01	0.02	**0.03**	0.03	**0.04**	0.04	**0.05**	0.06	0.07	0.08	**0.09**	0.10	0.10	0.12	0.15	0.19	0.21	0.24
18.0	1.00	0.01	0.02	**0.03**	0.03	**0.04**	0.05	**0.06**	0.06	0.07	0.08	**0.10**	0.10	0.11	0.14	0.17	0.20	0.23	0.25
	1.05	0.01	0.02	**0.03**	0.04	**0.04**	0.05	**0.06**	0.06	0.07	0.09	**0.10**	0.11	0.12	0.14	0.17	0.21	0.24	0.26
	1.20	0.01	0.02	**0.03**	0.04	**0.04**	0.05	**0.06**	0.06	0.08	0.09	**0.10**	0.11	0.12	0.15	0.18	0.22	0.25	0.28
	1.50	0.01	0.02	**0.03**	0.04	**0.04**	0.05	**0.06**	0.07	0.08	0.09	**0.11**	0.12	0.13	0.15	0.19	0.23	0.27	0.23
	3.00	0.01	0.02	**0.03**	0.04	**0.04**	0.05	**0.06**	0.07	0.08	0.10	**0.11**	0.12	0.13	0.16	0.19	0.24	0.28	0.31
20.0	1.00	0.01	0.02	**0.04**	0.04	**0.05**	0.06	**0.07**	0.07	0.09	0.10	**0.12**	0.13	0.14	0.17	0.21	0.26	0.29	0.32
	1.05	0.01	0.02	**0.04**	0.04	**0.05**	0.06	**0.07**	0.08	0.09	0.10	**0.12**	0.13	0.15	0.17	0.21	0.26	0.30	0.33
	1.20	0.01	0.02	**0.04**	0.04	**0.05**	0.06	**0.07**	0.08	0.09	0.11	**0.12**	0.14	0.15	0.18	0.22	0.28	0.32	0.36
	1.50	0.01	0.03	**0.04**	0.04	**0.05**	0.06	**0.07**	0.08	0.10	0.11	**0.13**	0.14	0.16	0.19	0.23	0.29	0.33	0.37
	3.00	0.01	0.03	**0.04**	0.05	**0.05**	0.06	**0.08**	0.08	0.10	0.11	**0.13**	0.14	0.17	0.19	0.24	0.29	0.34	0.38
22.4	1.00	0.02	0.03	**0.04**	0.05	**0.06**	0.07	**0.08**	0.09	0.11	0.12	**0.14**	0.16	0.17	0.21	0.26	0.32	0.36	0.40
	1.05	0.02	0.03	**0.05**	0.05	**0.06**	0.07	**0.08**	0.09	0.11	0.13	**0.15**	0.16	0.18	0.21	0.26	0.32	0.37	0.40
	1.20	0.02	0.03	**0.05**	0.05	**0.06**	0.07	**0.09**	0.09	0.11	0.13	**0.15**	0.17	0.18	0.22	0.27	0.34	0.39	0.43
	1.50	0.02	0.03	**0.05**	0.05	**0.06**	0.08	**0.09**	0.10	0.12	0.13	**0.15**	0.17	0.19	0.22	0.28	0.35	0.40	0.44
	3.00	0.02	0.03	**0.05**	0.05	**0.06**	0.08	**0.09**	0.10	0.12	0.14	**0.16**	0.17	0.19	0.23	0.29	0.35	0.41	0.46
25.0	1.00	0.02	0.03	**0.05**	0.06	**0.07**	0.08	**0.10**	0.10	0.13	0.15	**0.17**	0.19	0.21	0.25	0.31	0.38	0.44	0.48
	1.05	0.02	0.03	**0.05**	0.06	**0.07**	0.08	**0.10**	0.11	0.13	0.15	**0.17**	0.19	0.21	0.25	0.33	0.39	0.45	0.49
	1.20	0.02	0.03	**0.05**	0.06	**0.07**	0.09	**0.10**	0.11	0.13	0.16	**0.18**	0.20	0.22	0.26	0.33	0.40	0.46	0.51
	1.50	0.02	0.03	**0.06**	0.06	**0.07**	0.09	**0.10**	0.11	0.13	0.16	**0.18**	0.20	0.22	0.27	0.33	0.41	0.48	0.52
	3.00	0.02	0.03	**0.06**	0.06	**0.07**	0.09	**0.10**	0.11	0.13	0.16	**0.19**	0.20	0.22	0.27	0.34	0.42	0.49	0.53
28.0	1.00	0.02	0.04	**0.06**	0.07	**0.08**	0.10	**0.12**	0.13	0.15	0.18	**0.20**	0.22	0.25	0.30	0.37	0.45	0.52	0.56
	1.05	0.02	0.04	**0.06**	0.07	**0.08**	0.10	**0.12**	0.13	0.15	0.18	**0.21**	0.23	0.25	0.30	0.37	0.46	0.53	0.57
	1.20	0.02	0.04	**0.06**	0.07	**0.08**	0.10	**0.12**	0.13	0.16	0.18	**0.21**	0.23	0.26	0.31	0.38	0.47	0.54	0.59
	1.50	0.02	0.04	**0.06**	0.07	**0.08**	0.10	**0.12**	0.13	0.16	0.19	**0.21**	0.24	0.26	0.31	0.39	0.48	0.56	0.61
	3.00	0.02	0.04	**0.07**	0.07	**0.08**	0.10	**0.12**	0.13	0.16	0.19	**0.22**	0.24	0.26	0.32	0.40	0.49	0.57	0.62
31.5	1.00	0.02	0.04	**0.07**	0.08	**0.09**	0.11	**0.14**	0.15	0.18	0.21	**0.24**	0.26	0.29	0.35	0.44	0.53	0.60	0.65
	1.05	0.02	0.04	**0.07**	0.08	**0.09**	0.12	**0.14**	0.15	0.18	0.21	**0.24**	0.27	0.29	0.35	0.44	0.54	0.61	0.66
	1.20	0.02	0.05	**0.07**	0.08	**0.10**	0.12	**0.14**	0.15	0.18	0.21	**0.25**	0.27	0.30	0.36	0.45	0.55	0.63	0.68
	1.50	0.03	0.05	**0.07**	0.08	**0.10**	0.12	**0.14**	0.15	0.19	0.22	**0.25**	0.28	0.31	0.37	0.46	0.56	0.64	0.69
	3.00	0.03	0.05	**0.08**	0.08	**0.10**	0.12	**0.14**	0.15	0.19	0.22	**0.25**	0.28	0.31	0.37	0.46	0.57	0.65	0.70
35.5	1.00	0.03	0.05	**0.08**	0.09	**0.11**	0.13	**0.16**	0.17	0.21	0.24	**0.28**	0.31	0.34	0.41	0.51	0.62	0.69	0.73
	1.05	0.03	0.05	**0.08**	0.09	**0.11**	0.13	**0.16**	0.17	0.21	0.25	**0.28**	0.31	0.34	0.41	0.51	0.62	0.70	0.74
	1.20	0.03	0.05	**0.09**	0.10	**0.11**	0.14	**0.16**	0.18	0.21	0.25	**0.29**	0.32	0.35	0.42	0.52	0.64	0.72	0.76
	1.50	0.03	0.05	**0.09**	0.10	**0.11**	0.14	**0.16**	0.18	0.22	0.25	**0.29**	0.32	0.36	0.43	0.53	0.65	0.73	0.77
	3.00	0.03	0.05	**0.09**	0.10	**0.11**	0.14	**0.16**	0.18	0.22	0.25	**0.29**	0.33	0.36	0.43	0.54	0.66	0.74	0.78
40.0	1.00	0.03	0.06	**0.10**	0.11	**0.13**	0.16	**0.18**	0.20	0.24	0.28	**0.33**	0.36	0.40	0.47	0.59	0.71	0.78	0.79
	1.05	0.03	0.06	**0.10**	0.11	**0.13**	0.16	**0.18**	0.20	0.24	0.28	**0.33**	0.36	0.40	0.48	0.59	0.71	0.79	0.80
	1.20	0.03	0.06	**0.10**	0.11	**0.13**	0.16	**0.19**	0.20	0.25	0.29	**0.33**	0.37	0.41	0.49	0.60	0.73	0.80	0.82
	1.50	0.03	0.06	**0.10**	0.11	**0.13**	0.16	**0.19**	0.21	0.25	0.29	**0.34**	0.37	0.41	0.49	0.61	0.74	0.82	0.84
	3.00	0.03	0.06	**0.10**	0.11	**0.13**	0.16	**0.19**	0.21	0.25	0.29	**0.34**	0.38	0.41	0.50	0.62	0.74	0.83	0.85
45.0	1.00	0.04	0.07	**0.11**	0.13	**0.15**	0.18	**0.21**	0.23	0.28	0.33	**0.38**	0.41	0.46	0.54	0.67	0.79	0.85	0.83
	1.05	0.04	0.07	**0.11**	0.13	**0.15**	0.18	**0.21**	0.23	0.28	0.33	**0.38**	0.42	0.46	0.55	0.68	0.80	0.86	0.85
	1.20	0.04	0.07	**0.11**	0.13	**0.15**	0.18	**0.21**	0.23	0.28	0.33	**0.38**	0.42	0.47	0.55	0.69	0.81	0.88	0.86
	1.50	0.04	0.07	**0.11**	0.13	**0.15**	0.18	**0.22**	0.24	0.29	0.34	**0.39**	0.43	0.47	0.56	0.69	0.82	0.89	0.88
	3.00	0.04	0.07	**0.11**	0.13	**0.15**	0.18	**0.22**	0.24	0.29	0.34	**0.39**	0.43	0.47	0.57	0.70	0.83	0.90	0.89
v_{max}	m/s																		

Belt length correction factor c_3 Table 17

L_w	mm	171	191	211	281	291	311	326	333	346	351	363	386	411	436	461	541	571	611
c_3		0.87	0.90	0.92	0.98	0.99	1.00	1.01	1.01	1.02	1.03	1.03	1.05	1.06	1.07	1.09	1.12	1.13	1.15

CONTI FO®-Z 6/Y

Power rating P_R

Power rating P_R (kW) for a V-belt as a function of small pulley pitch diameter d_{wk}, transmission ratio i, small pulley speed n_k and pitch length L_w = 315 mm.
Min. pulley diameter $d_{b\,min}$ = 20 mm.

CONTI FO®-Z 6/Y — Table 18

d_{wk} (mm)	i or 1:i	Speed of small pulley n_k (min^{-1})																	
		200	400	**700**	800	**950**	1200	**1450**	1600	2000	2400	**2850**	3200	3600	4500	6000	8000	10000	12000
	1.00	0.01	0.03	**0.04**	0.04	**0.05**	0.06	**0.07**	0.07	0.09	0.10	**0.11**	0.12	0.13	0.15	0.17	0.20	0.21	0.21
	1.05	0.02	0.03	**0.04**	0.04	**0.05**	0.06	**0.07**	0.08	0.09	0.10	**0.11**	0.12	0.13	0.15	0.18	0.21	0.23	0.23
20.0	1.20	0.02	0.03	**0.04**	0.05	**0.05**	0.06	**0.07**	0.08	0.10	0.11	**0.12**	0.13	0.14	0.17	0.20	0.24	0.26	0.27
	1.50	0.02	0.03	**0.04**	0.05	**0.06**	0.07	**0.08**	0.08	0.10	0.11	**0.13**	0.14	0.15	0.18	0.22	0.26	0.28	0.30
	3.00	0.02	0.03	**0.05**	0.05	**0.06**	0.07	**0.08**	0.09	0.10	0.12	**0.14**	0.15	0.16	0.19	0.23	0.27	0.30	0.32
	1.00	0.02	0.03	**0.05**	0.06	**0.06**	0.08	**0.09**	0.10	0.11	0.13	**0.15**	0.16	0.17	0.20	0.25	0.29	0.32	0.33
	1.05	0.02	0.03	**0.05**	0.06	**0.07**	0.08	**0.09**	0.10	0.12	0.13	**0.15**	0.17	0.18	0.21	0.26	0.30	0.33	0.35
22.4	1.20	0.02	0.03	**0.05**	0.06	**0.07**	0.08	**0.10**	0.10	0.12	0.14	**0.16**	0.18	0.19	0.23	0.28	0.33	0.37	0.39
	1.50	0.02	0.04	**0.06**	0.06	**0.07**	0.09	**0.10**	0.11	0.13	0.15	**0.17**	0.18	0.20	0.24	0.29	0.35	0.39	0.42
	3.00	0.02	0.04	**0.06**	0.06	**0.07**	0.09	**0.10**	0.11	0.13	0.15	**0.17**	0.19	0.21	0.25	0.30	0.36	0.41	0.44
	1.00	0.02	0.04	**0.06**	0.07	**0.08**	0.10	**0.11**	0.12	0.14	0.17	**0.19**	0.21	0.23	0.27	0.32	0.39	0.43	0.45
	1.05	0.02	0.04	**0.06**	0.07	**0.08**	0.10	**0.11**	0.12	0.15	0.17	**0.19**	0.21	0.23	0.27	0.33	0.40	0.45	0.47
25.0	1.20	0.02	0.04	**0.07**	0.07	**0.08**	0.10	**0.12**	0.13	0.15	0.18	**0.20**	0.22	0.24	0.29	0.35	0.43	0.48	0.51
	1.50	0.02	0.04	**0.07**	0.07	**0.09**	0.10	**0.12**	0.13	0.16	0.18	**0.21**	0.23	0.25	0.30	0.37	0.45	0.51	0.54
	3.00	0.02	0.04	**0.07**	0.08	**0.09**	0.11	**0.12**	0.14	0.16	0.19	**0.22**	0.24	0.26	0.31	0.38	0.46	0.52	0.57
	1.00	0.03	0.05	**0.08**	0.08	**0.10**	0.12	**0.14**	0.15	0.18	0.21	**0.24**	0.26	0.28	0.34	0.41	0.50	0.55	0.59
	1.05	0.03	0.05	**0.08**	0.09	**0.10**	0.12	**0.14**	0.15	0.18	0.21	**0.24**	0.26	0.29	0.34	0.42	0.51	0.57	0.61
28.0	1.20	0.03	0.05	**0.08**	0.09	**0.10**	0.12	**0.14**	0.16	0.19	0.22	**0.25**	0.27	0.30	0.36	0.44	0.54	0.60	0.65
	1.50	0.03	0.05	**0.08**	0.09	**0.10**	0.13	**0.15**	0.16	0.19	0.22	**0.26**	0.28	0.31	0.37	0.46	0.56	0.63	0.68
	3.00	0.03	0.05	**0.08**	0.09	**0.11**	0.13	**0.15**	0.16	0.20	0.23	**0.26**	0.29	0.32	0.38	0.47	0.57	0.65	0.70
	1.00	0.03	0.06	**0.09**	0.10	**0.12**	0.14	**0.17**	0.18	0.22	0.25	**0.29**	0.32	0.35	0.42	0.51	0.62	0.69	0.73
	1.05	0.03	0.06	**0.09**	0.10	**0.12**	0.14	**0.17**	0.18	0.22	0.26	**0.29**	0.32	0.36	0.42	0.52	0.63	0.71	0.75
31.5	1.20	0.03	0.06	**0.09**	0.11	**0.12**	0.15	**0.17**	0.19	0.23	0.26	**0.30**	0.33	0.37	0.44	0.54	0.66	0.74	0.79
	1.50	0.03	0.06	**0.10**	0.11	**0.12**	0.15	**0.18**	0.19	0.23	0.27	**0.31**	0.34	0.38	0.45	0.56	0.68	0.77	0.82
	3.00	0.03	0.06	**0.10**	0.11	**0.13**	0.15	**0.18**	0.20	0.24	0.27	**0.32**	0.35	0.38	0.46	0.57	0.69	0.78	0.84
	1.00	0.04	0.07	**0.11**	0.12	**0.14**	0.17	**0.20**	0.22	0.26	0.30	**0.35**	0.39	0.42	0.50	0.62	0.75	0.83	0.86
	1.05	0.04	0.07	**0.11**	0.12	**0.14**	0.17	**0.20**	0.22	0.27	0.31	**0.36**	0.39	0.43	0.51	0.63	0.76	0.85	0.88
35.5	1.20	0.04	0.07	**0.11**	0.12	**0.14**	0.18	**0.21**	0.23	0.27	0.32	**0.36**	0.40	0.44	0.53	0.65	0.79	0.88	0.92
	1.50	0.04	0.07	**0.11**	0.13	**0.15**	0.18	**0.21**	0.23	0.28	0.32	**0.37**	0.41	0.45	0.54	0.67	0.81	0.91	0.95
	3.00	0.04	0.07	**0.11**	0.13	**0.15**	0.18	**0.21**	0.23	0.28	0.33	**0.38**	0.42	0.46	0.55	0.68	0.82	0.93	0.98
	1.00	0.04	0.08	**0.13**	0.14	**0.17**	0.20	**0.24**	0.26	0.31	0.36	**0.42**	0.46	0.51	0.60	0.74	0.89	0.97	0.99
	1.05	0.04	0.08	**0.13**	0.14	**0.17**	0.20	**0.24**	0.26	0.31	0.37	**0.42**	0.47	0.51	0.61	0.75	0.90	0.99	1.01
40.0	1.20	0.04	0.08	**0.13**	0.15	**0.17**	0.21	**0.24**	0.27	0.32	0.37	**0.43**	0.48	0.52	0.62	0.77	0.93	1.02	1.05
	1.50	0.04	0.08	**0.13**	0.15	**0.17**	0.21	**0.25**	0.27	0.33	0.38	**0.44**	0.48	0.53	0.64	0.79	0.95	1.05	1.08
	3.00	0.04	0.08	**0.13**	0.15	**0.17**	0.21	**0.25**	0.27	0.33	0.39	**0.45**	0.49	0.54	0.64	0.80	0.96	1.07	1.10
	1.00	0.05	0.09	**0.15**	0.17	**0.19**	0.24	**0.28**	0.30	0.37	0.43	**0.49**	0.54	0.60	0.71	0.87	1.03	1.11	1.09
	1.05	0.05	0.09	**0.15**	0.17	**0.19**	0.24	**0.28**	0.31	0.37	0.43	**0.50**	0.55	0.60	0.72	0.88	1.04	1.12	1.11
45.0	1.20	0.05	0.09	**0.15**	0.17	**0.20**	0.24	**0.29**	0.31	0.38	0.44	**0.51**	0.56	0.61	0.73	0.90	1.07	1.16	1.15
	1.50	0.05	0.09	**0.15**	0.17	**0.20**	0.25	**0.29**	0.31	0.38	0.44	**0.51**	0.57	0.62	0.74	0.92	1.09	1.18	1.18
	3.00	0.05	0.09	**0.15**	0.17	**0.20**	0.25	**0.29**	0.32	0.38	0.45	**0.52**	0.57	0.63	0.75	0.93	1.10	1.20	1.20
	1.00	0.06	0.10	**0.17**	0.19	**0.22**	0.27	**0.32**	0.35	0.42	0.49	**0.56**	0.62	0.68	0.81	0.99	1.15	1.21	1.14
	1.05	0.06	0.10	**0.17**	0.19	**0.22**	0.27	**0.32**	0.35	0.42	0.49	**0.57**	0.63	0.69	0.82	1.00	1.17	1.23	1.16
50.0	1.20	0.06	0.11	**0.17**	0.19	**0.23**	0.28	**0.33**	0.35	0.43	0.50	**0.58**	0.64	0.70	0.83	1.02	1.19	1.26	1.20
	1.50	0.06	0.11	**0.17**	0.20	**0.23**	0.28	**0.33**	0.36	0.43	0.51	**0.59**	0.64	0.71	0.84	1.04	1.21	1.29	1.23
	3.00	0.06	0.11	**0.18**	0.20	**0.23**	0.28	**0.33**	0.36	0.44	0.51	**0.59**	0.65	0.72	0.85	1.05	1.23	1.30	1.25
	1.00	0.06	0.12	**0.19**	0.22	**0.25**	0.31	**0.37**	0.40	0.48	0.56	**0.65**	0.71	0.78	0.93	1.13	1.28	1.30	1.13
	1.05	0.06	0.12	**0.20**	0.22	**0.26**	0.31	**0.37**	0.40	0.49	0.57	**0.65**	0.72	0.79	0.94	1.14	1.30	1.31	1.15
56.0	1.20	0.07	0.12	**0.20**	0.22	**0.26**	0.32	**0.37**	0.41	0.49	0.58	**0.66**	0.73	0.80	0.95	1.15	1.32	1.35	1.19
	1.50	0.07	0.12	**0.20**	0.22	**0.26**	0.32	**0.38**	0.41	0.50	0.58	**0.67**	0.74	0.81	0.96	1.17	1.34	1.37	1.22
	3.00	0.07	0.12	**0.20**	0.23	**0.26**	0.32	**0.38**	0.41	0.50	0.59	**0.68**	0.74	0.82	0.97	1.18	1.36	1.39	1.25
v_{max}	m/s																		

Belt length correction factor c_3 — Table 19

L_w	mm	215	255	265	285	295	315	330	350	367	390	415	440	465	510	545	575	615	865
c_3		0.92	0.95	0.96	0.98	0.99	1.00	1.01	1.02	1.03	1.05	1.06	1.07	1.09	1.11	1.12	1.13	1.15	1.23

CONTI FO®-Z 8/–

Power rating P_R

Power rating P_R (kW) for a V-belt as a function of small pulley pitch diameter d_{wk}, transmission ratio i, small pulley speed n_k and pitch length L_w = 579 mm.
Min. pulley diameter $d_{b\,min}$ = 31.5 mm.

CONTI FO®-Z 8/– Table 20

d_{wk} (mm)	i or 1:i	Speed of small pulley n_k (min^{-1})																	
		200	400	**700**	800	**950**	1200	**1450**	1600	2000	2400	**2850**	3200	3600	4000	5000	6000	7000	8000
31.5	1.00	0.04	0.07	**0.10**	0.11	**0.13**	0.15	**0.18**	0.19	0.22	0.25	**0.28**	0.30	0.32	0.34	0.38	0.41	0.42	0.42
	1.05	0.04	0.07	**0.11**	0.12	**0.13**	0.16	**0.18**	0.20	0.23	0.26	**0.29**	0.31	0.34	0.36	0.40	0.43	0.45	0.46
	1.20	0.04	0.07	**0.11**	0.13	**0.14**	0.17	**0.20**	0.21	0.25	0.28	**0.32**	0.34	0.37	0.40	0.45	0.49	0.52	0.53
	1.50	0.04	0.08	**0.12**	0.13	**0.15**	0.18	**0.21**	0.22	0.26	0.30	**0.34**	0.37	0.40	0.43	0.49	0.53	0.57	0.59
	3.00	0.04	0.08	**0.12**	0.14	**0.16**	0.19	**0.22**	0.23	0.27	0.31	**0.35**	0.38	0.42	0.45	0.51	0.57	0.61	0.63
35.5	1.00	0.05	0.09	**0.14**	0.15	**0.17**	0.21	**0.24**	0.26	0.30	0.35	**0.39**	0.42	0.46	0.49	0.56	0.61	0.65	0.67
	1.05	0.05	0.09	**0.14**	0.15	**0.18**	0.21	**0.25**	0.27	0.31	0.36	**0.41**	0.44	0.48	0.51	0.58	0.64	0.68	0.70
	1.20	0.05	0.09	**0.15**	0.16	**0.19**	0.22	**0.26**	0.28	0.33	0.38	**0.43**	0.47	0.51	0.55	0.63	0.70	0.75	0.78
	1.50	0.05	0.10	**0.15**	0.17	**0.19**	0.23	**0.27**	0.29	0.35	0.40	**0.45**	0.49	0.54	0.58	0.67	0.74	0.80	0.84
	3.00	0.06	0.10	**0.15**	0.17	**0.20**	0.24	**0.28**	0.30	0.36	0.41	**0.47**	0.51	0.55	0.60	0.69	0.77	0.83	0.88
40.0	1.00	0.06	0.11	**0.17**	0.19	**0.22**	0.27	**0.31**	0.33	0.40	0.46	**0.52**	0.56	0.61	0.66	0.76	0.84	0.89	0.93
	1.05	0.06	0.11	**0.18**	0.20	**0.22**	0.27	**0.32**	0.34	0.41	0.47	**0.53**	0.58	0.63	0.68	0.78	0.87	0.93	0.96
	1.20	0.06	0.11	**0.18**	0.20	**0.23**	0.28	**0.33**	0.36	0.42	0.49	**0.56**	0.61	0.66	0.71	0.83	0.92	0.99	1.04
	1.50	0.07	0.12	**0.19**	0.21	**0.24**	0.29	**0.34**	0.37	0.44	0.51	**0.58**	0.63	0.69	0.74	0.86	0.97	1.04	1.10
	3.00	0.07	0.12	**0.19**	0.21	**0.25**	0.30	**0.35**	0.38	0.45	0.52	**0.59**	0.65	0.71	0.76	0.89	1.00	1.08	1.14
45.0	1.00	0.07	0.13	**0.21**	0.24	**0.27**	0.33	**0.38**	0.42	0.50	0.57	**0.65**	0.71	0.78	0.84	0.97	1.07	1.15	1.19
	1.05	0.07	0.13	**0.21**	0.24	**0.28**	0.34	**0.39**	0.42	0.51	0.59	**0.67**	0.73	0.80	0.86	0.99	1.10	1.18	1.23
	1.20	0.08	0.14	**0.22**	0.25	**0.29**	0.35	**0.40**	0.44	0.53	0.61	**0.69**	0.76	0.83	0.89	1.04	1.16	1.25	1.30
	1.50	0.08	0.14	**0.23**	0.25	**0.29**	0.36	**0.42**	0.45	0.54	0.63	**0.72**	0.78	0.86	0.92	1.08	1.20	1.30	1.36
	3.00	0.08	0.14	**0.23**	0.26	**0.30**	0.36	**0.42**	0.46	0.55	0.64	**0.73**	0.80	0.87	0.94	1.10	1.23	1.33	1.40
50.0	1.00	0.09	0.16	**0.25**	0.28	**0.32**	0.39	**0.46**	0.50	0.60	0.69	**0.79**	0.86	0.94	1.01	1.17	1.30	1.38	1.43
	1.05	0.09	0.16	**0.25**	0.28	**0.33**	0.40	**0.47**	0.51	0.61	0.70	**0.80**	0.88	0.96	1.03	1.20	1.33	1.42	1.46
	1.20	0.09	0.16	**0.26**	0.29	**0.34**	0.41	**0.48**	0.52	0.62	0.72	**0.83**	0.91	0.99	1.07	1.24	1.38	1.48	1.54
	1.50	0.09	0.16	**0.27**	0.30	**0.34**	0.42	**0.49**	0.53	0.64	0.74	**0.85**	0.93	1.02	1.10	1.28	1.43	1.53	1.60
	3.00	0.09	0.17	**0.27**	0.30	**0.35**	0.42	**0.50**	0.54	0.65	0.75	**0.87**	0.95	1.04	1.12	1.31	1.46	1.57	1.64
56.0	1.00	0.10	0.18	**0.30**	0.33	**0.38**	0.47	**0.55**	0.59	0.71	0.83	**0.95**	1.04	1.13	1.22	1.41	1.55	1.64	1.67
	1.05	0.10	0.19	**0.30**	0.34	**0.39**	0.47	**0.56**	0.60	0.72	0.84	**0.96**	1.05	1.15	1.24	1.43	1.58	1.67	1.71
	1.20	0.10	0.19	**0.31**	0.34	**0.40**	0.48	**0.57**	0.62	0.74	0.86	**0.99**	1.08	1.18	1.27	1.48	1.63	1.74	1.78
	1.50	0.11	0.19	**0.31**	0.35	**0.40**	0.49	**0.58**	0.63	0.76	0.88	**1.01**	1.10	1.21	1.30	1.51	1.68	1.79	1.84
	3.00	0.11	0.19	**0.32**	0.35	**0.41**	0.50	**0.59**	0.64	0.77	0.89	**1.02**	1.12	1.23	1.32	1.54	1.71	1.83	1.89
63.0	1.00	0.12	0.22	**0.35**	0.39	**0.45**	0.55	**0.65**	0.71	0.85	0.99	**1.13**	1.23	1.34	1.45	1.66	1.82	1.90	1.90
	1.05	0.12	0.22	**0.35**	0.40	**0.46**	0.56	**0.66**	0.71	0.86	1.00	**1.14**	1.25	1.36	1.47	1.69	1.85	1.93	1.94
	1.20	0.12	0.22	**0.36**	0.40	**0.47**	0.57	**0.67**	0.73	0.88	1.02	**1.17**	1.28	1.39	1.50	1.73	1.90	2.00	2.01
	1.50	0.12	0.22	**0.37**	0.41	**0.48**	0.58	**0.68**	0.74	0.89	1.04	**1.19**	1.30	1.42	1.53	1.77	1.95	2.05	2.07
	3.00	0.12	0.23	**0.37**	0.41	**0.48**	0.59	**0.69**	0.75	0.90	1.05	**1.20**	1.32	1.44	1.55	1.80	1.98	2.09	2.11
71.0	1.00	0.14	0.25	**0.41**	0.46	**0.53**	0.65	**0.77**	0.83	1.00	1.16	**1.33**	1.45	1.58	1.70	1.93	2.08	2.14	2.07
	1.05	0.14	0.25	**0.41**	0.46	**0.54**	0.66	**0.77**	0.84	1.01	1.17	**1.34**	1.46	1.60	1.71	1.96	2.11	2.17	2.11
	1.20	0.14	0.26	**0.42**	0.47	**0.55**	0.67	**0.79**	0.85	1.03	1.19	**1.37**	1.49	1.63	1.75	2.00	2.17	2.23	2.19
	1.50	0.14	0.26	**0.43**	0.48	**0.55**	0.68	**0.80**	0.87	1.04	1.21	**1.39**	1.52	1.66	1.78	2.04	2.21	2.29	2.24
	3.00	0.14	0.26	**0.43**	0.48	**0.56**	0.68	**0.80**	0.87	1.05	1.22	**1.40**	1.53	1.67	1.80	2.07	2.24	2.32	2.29
80.0	1.00	0.16	0.29	**0.48**	0.54	**0.62**	0.76	**0.89**	0.97	1.17	1.35	**1.55**	1.68	1.83	1.96	2.20	2.33	2.32	2.15
	1.05	0.16	0.29	**0.48**	0.54	**0.63**	0.77	**0.90**	0.98	1.18	1.36	**1.56**	1.70	1.85	1.98	2.23	2.36	2.35	2.19
	1.20	0.16	0.30	**0.49**	0.55	**0.64**	0.78	**0.91**	0.99	1.20	1.39	**1.59**	1.73	1.88	2.01	2.27	2.42	2.42	2.26
	1.50	0.16	0.30	**0.49**	0.55	**0.64**	0.79	**0.92**	1.01	1.21	1.40	**1.61**	1.75	1.91	2.04	2.31	2.46	2.47	2.32
	3.00	0.16	0.30	**0.50**	0.56	**0.65**	0.79	**0.93**	1.01	1.22	1.42	**1.62**	1.77	1.92	2.06	2.34	2.49	2.51	2.36
90.0	1.00	0.18	0.34	**0.55**	0.62	**0.72**	0.88	**1.03**	1.12	1.35	1.56	**1.78**	1.93	2.09	2.22	2.46	2.53	2.41	2.06
	1.05	0.18	0.34	**0.55**	0.62	**0.72**	0.89	**1.04**	1.13	1.36	1.57	**1.79**	1.95	2.10	2.24	2.49	2.56	2.44	2.10
	1.20	0.19	0.34	**0.56**	0.63	**0.73**	0.90	**1.05**	1.14	1.38	1.59	**1.82**	1.98	2.14	2.28	2.53	2.62	2.51	2.18
	1.50	0.19	0.35	**0.57**	0.64	**0.74**	0.91	**1.06**	1.16	1.39	1.61	**1.84**	2.00	2.16	2.31	2.57	2.66	2.56	2.23
	3.00	0.19	0.35	**0.57**	0.64	**0.74**	0.91	**1.07**	1.17	1.40	1.62	**1.85**	2.02	2.18	2.33	2.59	2.69	2.60	2.28
v_{max}	m/s																		

Belt length correction factor c_3 Table 21

L_w	mm	179	219	299	319	334	359	371	394	419	469	514	549	579	619	649	729	819	919
c_3		0.76	0.80	0.86	0.87	0.88	0.90	0.91	0.92	0.93	0.95	0.97	0.99	1.00	1.01	1.02	1.05	1.08	1.10

CONTI FO®-Z XPZ

Power rating P_R
Power rating P_R (kW) for a V-belt as a function of small pulley pitch diameter d_{wk}, transmission ratio i, small pulley speed n_k and pitch length L_w = 1600 mm.
Min. pulley diameter $d_{b\,min}$ = 50 mm.

CONTI FO®-Z XPZ

Table 22

d_{wk} (mm)	i or 1:i	Speed of small pulley n_k (min^{-1})																	
		200	400	**700**	800	**950**	1200	**1450**	1600	2000	2400	**2850**	3200	3600	4000	5000	6000	7500	9500
	1.00	0.15	0.26	**0.42**	0.47	**0.54**	0.66	**0.77**	0.83	0.99	1.14	**1.30**	1.41	1.54	1.66	1.92	2.14	2.38	2.52
	1.05	0.15	0.27	**0.43**	0.48	**0.55**	0.67	**0.78**	0.85	1.01	1.16	**1.33**	1.45	1.58	1.70	1.98	2.21	2.46	2.62
50.0	1.20	0.16	0.29	**0.47**	0.53	**0.61**	0.74	**0.86**	0.94	1.12	1.30	**1.49**	1.63	1.78	1.93	2.26	2.55	2.89	3.16
	1.50	0.17	0.30	**0.49**	0.55	**0.64**	0.78	**0.91**	0.99	1.19	1.37	**1.58**	1.73	1.89	2.05	2.41	2.73	3.12	3.45
	3.00	0.17	0.31	**0.51**	0.57	**0.66**	0.80	**0.94**	1.02	1.23	1.43	**1.64**	1.80	1.98	2.14	2.53	2.87	3.29	3.66
	1.00	0.19	0.34	**0.56**	0.62	**0.72**	0.88	**1.03**	1.12	1.35	1.56	**1.79**	1.96	2.15	2.32	2.72	3.07	3.46	3.75
	1.05	0.19	0.35	**0.56**	0.63	**0.73**	0.89	**1.05**	1.14	1.37	1.59	**1.82**	1.99	2.18	2.36	2.78	3.13	3.54	3.85
56.0	1.20	0.20	0.37	**0.60**	0.68	**0.79**	0.96	**1.13**	1.23	1.48	1.72	**1.98**	2.18	2.39	2.59	3.06	3.47	3.97	4.39
	1.50	0.21	0.38	**0.63**	0.70	**0.82**	1.00	**1.17**	1.28	1.54	1.80	**2.07**	2.27	2.50	2.71	3.21	3.65	4.20	4.68
	3.00	0.21	0.39	**0.64**	0.72	**0.84**	1.03	**1.21**	1.31	1.59	1.85	**2.13**	2.35	2.58	2.81	3.33	3.79	4.37	4.90
	1.00	0.24	0.44	**0.71**	0.80	**0.93**	1.14	**1.34**	1.45	1.76	2.05	**2.36**	2.59	2.84	3.08	3.63	4.11	4.67	5.08
	1.05	0.24	0.44	**0.72**	0.81	**0.94**	1.15	**1.35**	1.47	1.78	2.07	**2.39**	2.62	2.88	3.12	3.69	4.17	4.75	5.18
63.0	1.20	0.25	0.46	**0.76**	0.85	**0.99**	1.22	**1.44**	1.56	1.89	2.21	**2.55**	2.80	3.08	3.35	3.97	4.52	5.18	5.73
	1.50	0.25	0.47	**0.78**	0.88	**1.02**	1.25	**1.48**	1.61	1.95	2.28	**2.64**	2.90	3.19	3.47	4.13	4.70	5.41	6.01
	3.00	0.26	0.48	**0.80**	0.90	**1.04**	1.28	**1.51**	1.65	2.00	2.34	**2.70**	2.97	3.28	3.57	4.24	4.84	5.58	6.23
	1.00	0.29	0.54	**0.89**	1.00	**1.16**	1.43	**1.68**	1.83	2.22	2.59	**2.99**	3.29	3.62	3.93	4.65	5.26	5.97	6.45
	1.05	0.29	0.54	**0.90**	1.01	**1.17**	1.44	**1.70**	1.85	2.24	2.62	**3.02**	3.33	3.66	3.98	4.70	5.32	6.05	6.55
71.0	1.20	0.30	0.57	**0.94**	1.05	**1.23**	1.51	**1.78**	1.94	2.36	2.76	**3.19**	3.51	3.87	4.21	4.99	5.67	6.48	7.10
	1.50	0.31	0.58	**0.96**	1.08	**1.26**	1.55	**1.83**	1.99	2.42	2.83	**3.27**	3.61	3.97	4.33	5.14	5.85	6.70	7.39
	3.00	0.31	0.59	**0.97**	1.10	**1.28**	1.57	**1.86**	2.03	2.46	2.89	**3.34**	3.68	4.06	4.42	5.25	5.99	6.88	7.60
	1.00	0.35	0.66	**1.09**	1.22	**1.43**	1.75	**2.07**	2.26	2.74	3.20	**3.70**	4.07	4.48	4.87	5.75	6.49	7.32	7.79
	1.05	0.35	0.66	**1.09**	1.23	**1.44**	1.77	**2.09**	2.27	2.76	3.23	**3.73**	4.11	4.52	4.91	5.80	6.56	7.40	7.89
80.0	1.20	0.36	0.68	**1.13**	1.28	**1.49**	1.83	**2.17**	2.37	2.88	3.37	**3.90**	4.29	4.73	5.14	6.09	6.90	7.83	8.43
	1.50	0.37	0.70	**1.15**	1.30	**1.52**	1.87	**2.21**	2.41	2.94	3.44	**3.98**	4.39	4.83	5.26	6.24	7.08	8.06	8.72
	3.00	0.37	0.71	**1.17**	1.32	**1.54**	1.90	**2.25**	2.45	2.98	3.49	**4.05**	4.46	4.92	5.35	6.35	7.22	8.23	8.94
	1.00	0.42	0.79	**1.30**	1.47	**1.71**	2.11	**2.50**	2.72	3.31	3.87	**4.47**	4.92	5.41	5.88	6.92	7.78	8.67	8.98
	1.05	0.42	0.79	**1.31**	1.48	**1.72**	2.12	**2.51**	2.74	3.33	3.90	**4.50**	4.96	5.45	5.92	6.97	7.85	8.75	9.08
90.0	1.20	0.43	0.81	**1.35**	1.52	**1.78**	2.19	**2.59**	2.83	3.44	4.03	**4.67**	5.14	5.66	6.15	7.26	8.19	9.18	9.62
	1.50	0.44	0.82	**1.37**	1.55	**1.81**	2.23	**2.64**	2.88	3.50	4.11	**4.75**	5.24	5.77	6.27	7.41	8.37	9.41	9.91
	3.00	0.44	0.83	**1.39**	1.57	**1.83**	2.26	**2.67**	2.92	3.55	4.16	**4.82**	5.31	5.85	6.36	7.53	8.51	9.58	10.13
	1.00	0.48	0.91	**1.52**	1.71	**2.00**	2.47	**2.92**	3.18	3.87	4.53	**5.23**	5.75	6.32	6.85	8.04	8.98	9.85	9.83
	1.05	0.49	0.92	**1.53**	1.72	**2.01**	2.48	**2.93**	3.20	3.89	4.55	**5.26**	5.79	6.36	6.90	8.09	9.04	9.93	9.93
100.0	1.20	0.50	0.94	**1.57**	1.77	**2.06**	2.55	**3.02**	3.29	4.00	4.69	**5.42**	5.97	6.56	7.13	8.38	9.39	10.36	10.48
	1.50	0.50	0.95	**1.59**	1.79	**2.09**	2.58	**3.06**	3.34	4.07	4.76	**5.51**	6.07	6.67	7.25	8.53	9.57	10.59	10.77
	3.00	0.51	0.96	**1.60**	1.81	**2.11**	2.61	**3.09**	3.38	4.11	4.82	**5.58**	6.14	6.76	7.34	8.64	9.70	10.76	10.98
	1.00	0.56	1.07	**1.77**	2.00	**2.34**	2.89	**3.42**	3.73	4.53	5.30	**6.12**	6.72	7.37	7.98	9.30	10.28	11.02	
	1.05	0.57	1.07	**1.78**	2.01	**2.35**	2.90	**3.43**	3.74	4.55	5.32	**6.15**	6.76	7.41	8.02	9.35	10.34	11.10	
112.0	1.20	0.58	1.09	**1.82**	2.06	**2.40**	2.97	**3.52**	3.84	4.67	5.46	**6.31**	6.94	7.62	8.25	9.64	10.69	11.53	
	1.50	0.58	1.11	**1.84**	2.08	**2.43**	3.00	**3.56**	3.88	4.73	5.53	**6.40**	7.04	7.73	8.37	9.79	10.87	11.76	
	3.00	0.59	1.11	**1.86**	2.10	**2.45**	3.03	**3.59**	3.92	4.77	5.59	**6.46**	7.11	7.81	8.47	9.90	11.01	11.93	
	1.00	0.65	1.23	**2.05**	2.31	**2.70**	3.34	**3.95**	4.31	5.24	6.12	**7.06**	7.74	8.47	9.14	10.55	11.51	11.95	
	1.05	0.65	1.23	**2.06**	2.32	**2.71**	3.35	**3.97**	4.33	5.26	6.15	**7.09**	7.77	8.51	9.19	10.60	11.57	12.03	
125.0	1.20	0.66	1.26	**2.10**	2.37	**2.77**	3.42	**4.05**	4.42	5.37	6.28	**7.25**	7.96	8.71	9.41	10.89	11.92	12.46	
	1.50	0.67	1.27	**2.12**	2.39	**2.80**	3.46	**4.09**	4.47	5.43	6.36	**7.33**	8.05	8.82	9.54	11.04	12.10	12.69	
	3.00	0.67	1.28	**2.14**	2.41	**2.82**	3.48	**4.13**	4.50	5.48	6.41	**7.40**	8.13	8.91	9.63	11.16	12.24	12.86	
	1.00	0.75	1.42	**2.37**	2.67	**3.12**	3.85	**4.56**	4.97	6.04	7.04	**8.10**	8.87	9.67	10.40	11.85	12.68	12.54	
	1.05	0.75	1.42	**2.37**	2.68	**3.13**	3.87	**4.58**	4.99	6.06	7.07	**8.13**	8.90	9.71	10.44	11.90	12.74	12.62	
140.0	1.20	0.76	1.44	**2.41**	2.73	**3.19**	3.93	**4.66**	5.08	6.17	7.21	**8.29**	9.08	9.92	10.67	12.19	13.09	13.05	
	1.50	0.77	1.46	**2.43**	2.75	**3.21**	3.97	**4.70**	5.13	6.23	7.28	**8.38**	9.18	10.03	10.79	12.34	13.27	13.28	
	3.00	0.77	1.47	**2.45**	2.77	**3.24**	4.00	**4.74**	5.17	6.28	7.33	**8.45**	9.25	10.11	10.89	12.45	13.40	13.45	
v_{max}	m/s																	45	55

Belt length correction factor c_3

Table 23

L_w	mm	590	630	710	800	900	1000	1120	1250	1400	1500	1600	1800	2000	2240	2500	2800	3150	3550
c_3		0.82	0.83	0.85	0.87	0.89	0.91	0.93	0.95	0.98	0.99	1.00	1.02	1.04	1.06	1.08	1.10	1.12	1.15

CONTI FO®-Z XPA

Power rating P_R
Power rating P_R (kW) for a V-belt as a function of small pulley pitch diameter d_{wk}, transmission ratio i, small pulley speed n_k and pitch length L_w = 2500 mm.
Min. pulley diameter $d_{b\,min}$ = 63 mm.

CONTI FO®-Z XPA — Table 24

d_{wk} (mm)	i or 1:i	Speed of small pulley n_k (min^{-1})																	
		100	200	400	**700**	800	**950**	1200	**1450**	1600	2000	2400	**2850**	3200	3600	4000	5000	6000	7500
63.0	1.00	0.14	0.25	0.45	**0.70**	0.78	**0.90**	1.08	**1.24**	1.34	1.58	1.80	**2.02**	2.17	2.33	2.47	2.74	2.89	2.85
	1.05	0.14	0.26	0.46	**0.72**	0.80	**0.92**	1.11	**1.28**	1.38	1.63	1.85	**2.09**	2.25	2.42	2.57	2.86	3.04	3.03
	1.20	0.15	0.28	0.51	**0.81**	0.91	**1.05**	1.27	**1.47**	1.59	1.89	2.17	**2.46**	2.67	2.90	3.10	3.53	3.83	4.03
	1.50	0.16	0.30	0.54	**0.86**	0.97	**1.11**	1.35	**1.57**	1.70	2.03	2.34	**2.66**	2.90	3.15	3.38	3.88	4.25	4.56
	3.00	0.17	0.31	0.56	**0.90**	1.01	**1.16**	1.41	**1.65**	1.79	2.14	2.47	**2.82**	3.07	3.34	3.59	4.14	4.57	4.95
71.0	1.00	0.19	0.34	0.62	**1.00**	1.12	**1.29**	1.57	**1.83**	1.98	2.37	2.73	**3.10**	3.37	3.66	3.93	4.48	4.86	5.09
	1.05	0.19	0.35	0.63	**1.02**	1.14	**1.32**	1.60	**1.87**	2.02	2.42	2.79	**3.17**	3.45	3.75	4.02	4.60	5.01	5.27
	1.20	0.20	0.37	0.69	**1.11**	1.25	**1.44**	1.76	**2.06**	2.24	2.68	3.11	**3.55**	3.88	4.23	4.55	5.26	5.80	6.27
	1.50	0.21	0.39	0.71	**1.16**	1.30	**1.51**	1.84	**2.16**	2.35	2.82	3.27	**3.75**	4.10	4.48	4.83	5.61	6.22	6.79
	3.00	0.21	0.40	0.74	**1.20**	1.35	**1.56**	1.91	**2.24**	2.43	2.93	3.40	**3.90**	4.27	4.67	5.05	5.88	6.54	7.19
80.0	1.00	0.24	0.44	0.82	**1.34**	1.50	**1.74**	2.12	**2.49**	2.70	3.25	3.76	**4.31**	4.70	5.13	5.52	6.36	6.98	7.42
	1.05	0.24	0.45	0.83	**1.35**	1.52	**1.76**	2.15	**2.52**	2.74	3.30	3.82	**4.38**	4.78	5.22	5.62	6.48	7.12	7.61
	1.20	0.26	0.48	0.88	**1.45**	1.62	**1.89**	2.31	**2.72**	2.95	3.56	4.14	**4.76**	5.21	5.70	6.15	7.15	7.92	8.60
	1.50	0.26	0.49	0.91	**1.49**	1.68	**1.95**	2.39	**2.82**	3.07	3.70	4.31	**4.96**	5.43	5.95	6.43	7.50	8.34	9.13
	3.00	0.27	0.50	0.93	**1.53**	1.72	**2.00**	2.46	**2.89**	3.15	3.81	4.44	**5.11**	5.60	6.14	6.64	7.76	8.66	9.53
90.0	1.00	0.30	0.56	1.04	**1.70**	1.91	**2.23**	2.73	**3.21**	3.49	4.21	4.90	**5.62**	6.15	6.72	7.25	8.37	9.20	9.77
	1.05	0.30	0.56	1.05	**1.72**	1.93	**2.25**	2.76	**3.24**	3.53	4.26	4.96	**5.69**	6.23	6.81	7.35	8.50	9.34	9.95
	1.20	0.31	0.59	1.10	**1.81**	2.04	**2.37**	2.92	**3.44**	3.74	4.53	5.28	**6.07**	6.66	7.29	7.88	9.16	10.14	10.95
	1.50	0.32	0.60	1.13	**1.86**	2.10	**2.44**	3.00	**3.54**	3.85	4.67	5.44	**6.27**	6.88	7.54	8.16	9.51	10.56	11.48
	3.00	0.33	0.61	1.15	**1.90**	2.14	**2.49**	3.06	**3.62**	3.94	4.77	5.57	**6.42**	7.05	7.73	8.37	9.78	10.88	11.87
100.0	1.00	0.36	0.67	1.25	**2.07**	2.33	**2.71**	3.33	**3.92**	4.27	5.17	6.02	**6.91**	7.57	8.27	8.92	10.29	11.26	11.84
	1.05	0.36	0.68	1.26	**2.08**	2.35	**2.73**	3.36	**3.96**	4.31	5.22	6.07	**6.98**	7.65	8.36	9.02	10.42	11.41	12.02
	1.20	0.37	0.70	1.32	**2.18**	2.45	**2.86**	3.52	**4.15**	4.52	5.48	6.39	**7.36**	8.07	8.84	9.55	11.08	12.21	13.02
	1.50	0.38	0.72	1.34	**2.23**	2.51	**2.93**	3.60	**4.25**	4.64	5.62	6.56	**7.56**	8.30	9.09	9.83	11.43	12.63	13.54
	3.00	0.38	0.73	1.36	**2.26**	2.55	**2.98**	3.66	**4.33**	4.72	5.73	6.69	**7.71**	8.47	9.28	10.04	11.70	12.94	13.94
112.0	1.00	0.43	0.80	1.51	**2.50**	2.82	**3.29**	4.04	**4.77**	5.20	6.30	7.33	**8.43**	9.23	10.08	10.86	12.46	13.52	13.90
	1.05	0.43	0.81	1.52	**2.52**	2.84	**3.31**	4.07	**4.81**	5.24	6.34	7.39	**8.50**	9.31	10.16	10.95	12.58	13.67	14.08
	1.20	0.44	0.84	1.57	**2.61**	2.94	**3.44**	4.23	**5.00**	5.45	6.61	7.71	**8.88**	9.73	10.64	11.48	13.25	14.47	15.08
	1.50	0.45	0.85	1.60	**2.66**	3.00	**3.50**	4.31	**5.10**	5.56	6.75	7.88	**9.08**	9.96	10.90	11.77	13.60	14.89	15.61
	3.00	0.45	0.86	1.62	**2.70**	3.04	**3.55**	4.38	**5.18**	5.65	6.86	8.01	**9.23**	10.13	11.09	11.98	13.86	15.20	16.00
125.0	1.00	0.50	0.95	1.79	**2.97**	3.35	**3.90**	4.81	**5.68**	6.19	7.50	8.74	**10.03**	10.97	11.96	12.85	14.63	15.68	15.58
	1.05	0.50	0.95	1.80	**2.98**	3.37	**3.93**	4.84	**5.72**	6.23	7.55	8.79	**10.10**	11.05	12.05	12.95	14.76	15.82	15.77
	1.20	0.52	0.98	1.85	**3.08**	3.47	**4.05**	5.00	**5.91**	6.44	7.81	9.11	**10.48**	11.47	12.52	13.48	15.42	16.62	16.76
	1.50	0.52	0.99	1.88	**3.13**	3.53	**4.12**	5.08	**6.01**	6.55	7.95	9.28	**10.68**	11.70	12.78	13.76	15.77	17.04	17.29
	3.00	0.53	1.00	1.90	**3.16**	3.57	**4.17**	5.14	**6.09**	6.64	8.06	9.41	**10.83**	11.87	12.97	13.97	16.04	17.36	17.69
140.0	1.00	0.59	1.11	2.10	**3.50**	3.95	**4.61**	5.68	**6.72**	7.32	8.86	10.31	**11.82**	12.90	14.03	15.02	16.89	17.74	16.73
	1.05	0.59	1.12	2.11	**3.52**	3.97	**4.64**	5.71	**6.75**	7.36	8.91	10.37	**11.89**	12.98	14.11	15.12	17.01	17.89	16.91
	1.20	0.60	1.14	2.17	**3.61**	4.08	**4.76**	5.87	**6.95**	7.57	9.18	10.69	**12.27**	13.41	14.59	15.65	17.68	18.69	17.91
	1.50	0.61	1.16	2.19	**3.66**	4.13	**4.83**	5.96	**7.05**	7.68	9.32	10.86	**12.47**	13.63	14.84	15.93	18.03	19.11	18.44
	3.00	0.62	1.17	2.22	**3.70**	4.18	**4.88**	6.02	**7.12**	7.77	9.43	10.99	**12.62**	13.80	15.04	16.14	18.29	19.42	18.83
160.0	1.00	0.70	1.33	2.52	**4.21**	4.75	**5.55**	6.83	**8.08**	8.80	10.64	12.35	**14.11**	15.35	16.60	17.67	19.44	19.72	
	1.05	0.70	1.34	2.53	**4.22**	4.77	**5.57**	6.86	**8.11**	8.84	10.69	12.41	**14.18**	15.42	16.69	17.77	19.56	19.87	
	1.20	0.72	1.36	2.59	**4.32**	4.87	**5.70**	7.02	**8.30**	9.05	10.96	12.73	**14.56**	15.85	17.16	18.30	20.23	20.67	
	1.50	0.72	1.38	2.61	**4.37**	4.93	**5.76**	7.11	**8.41**	9.16	11.10	12.90	**14.76**	16.07	17.42	18.58	20.58	21.09	
	3.00	0.73	1.39	2.63	**4.40**	4.97	**5.81**	7.17	**8.48**	9.25	11.20	13.03	**14.91**	16.24	17.61	18.79	20.84	21.41	
180.0	1.00	0.81	1.55	2.94	**4.91**	5.54	**6.47**	7.97	**9.41**	10.25	12.37	14.32	**16.28**	17.62	18.94	20.00	21.41		
	1.05	0.82	1.55	2.95	**4.92**	5.56	**6.49**	8.00	**9.45**	10.29	12.42	14.37	**16.35**	17.70	19.03	20.10	21.53		
	1.20	0.83	1.58	3.00	**5.02**	5.66	**6.62**	8.16	**9.64**	10.50	12.68	14.69	**16.73**	18.13	19.51	20.63	22.19		
	1.50	0.84	1.59	3.03	**5.06**	5.72	**6.68**	8.24	**9.74**	10.61	12.82	14.86	**16.93**	18.35	19.76	20.91	22.55		
	3.00	0.84	1.61	3.05	**5.10**	5.76	**6.73**	8.31	**9.82**	10.70	12.93	14.99	**17.08**	18.52	19.95	21.13	22.81		
v_{max}	m/s																	50	

Belt length correction factor c_3 — Table 25

L_w	mm	590	800	900	1000	1120	1250	1400	1600	1800	2000	2240	2500	2650	2800	3000	3150	3350	3550
c_3		0.76	0.81	0.83	0.85	0.86	0.88	0.90	0.92	0.94	0.96	0.98	1.00	1.01	1.02	1.03	1.04	1.05	1.06

CONTI FO®-Z XPB

Power rating P_R
Power rating P_R (kW) for a V-belt as a function of small pulley pitch diameter d_{wk}, transmission ratio i, small pulley speed n_k and pitch length L_w = 3550 mm.
Min. pulley diameter $d_{b\,min}$ = 100 mm.

CONTI FO®-Z XPB — Table 26

d_{wk} (mm)	i or 1:i	Speed of small pulley n_k (min^{-1})																	
		100	200	400	**700**	800	**950**	1200	**1450**	1600	1800	2000	2200	2400	**2850**	3200	3600	4500	6000
	1.00	0.53	0.93	1.65	**2.65**	2.97	**3.43**	4.18	**4.88**	5.29	5.82	6.33	6.83	7.30	**8.29**	8.99	9.70	10.98	11.88
	1.05	0.53	0.94	1.67	**2.69**	3.01	**3.48**	4.24	**4.96**	5.38	5.92	6.44	6.94	7.43	**8.44**	9.16	9.90	11.21	12.20
100.0	1.20	0.56	0.99	1.79	**2.89**	3.24	**3.76**	4.59	**5.38**	5.84	6.44	7.02	7.58	8.12	**9.26**	10.08	10.94	12.52	13.93
	1.50	0.58	1.02	1.85	**3.00**	3.37	**3.90**	4.77	**5.60**	6.09	6.71	7.32	7.91	8.49	**9.70**	10.57	11.49	13.20	14.85
	3.00	0.59	1.05	1.90	**3.08**	3.46	**4.01**	4.91	**5.77**	6.27	6.92	7.55	8.17	8.76	**10.03**	10.94	11.90	13.72	15.54
	1.00	0.65	1.15	2.09	**3.39**	3.80	**4.41**	5.39	**6.33**	6.87	7.58	8.26	8.92	9.55	**10.88**	11.82	12.78	14.50	15.70
	1.05	0.65	1.16	2.11	**3.43**	3.85	**4.46**	5.45	**6.40**	6.96	7.67	8.36	9.03	9.67	**11.03**	11.99	12.97	14.74	16.01
112.0	1.20	0.68	1.22	2.22	**3.63**	4.08	**4.74**	5.80	**6.82**	7.42	8.19	8.94	9.67	10.37	**11.85**	12.91	14.02	16.04	17.75
	1.50	0.69	1.25	2.28	**3.73**	4.20	**4.88**	5.98	**7.05**	7.66	8.47	9.25	10.00	10.73	**12.29**	13.40	14.56	16.72	18.67
	3.00	0.71	1.27	2.33	**3.82**	4.29	**4.99**	6.12	**7.21**	7.85	8.68	9.48	10.26	11.01	**12.61**	13.77	14.98	17.24	19.36
	1.00	0.77	1.39	2.55	**4.18**	4.70	**5.46**	6.69	**7.88**	8.56	9.45	10.31	11.14	11.94	**13.61**	14.79	15.99	18.08	19.31
	1.05	0.78	1.40	2.57	**4.22**	4.74	**5.51**	6.76	**7.95**	8.65	9.55	10.42	11.26	12.06	**13.76**	14.96	16.18	18.32	19.63
125.0	1.20	0.80	1.46	2.69	**4.42**	4.97	**5.79**	7.10	**8.37**	9.11	10.07	11.00	11.89	12.76	**14.59**	15.88	17.22	19.62	21.36
	1.50	0.82	1.49	2.75	**4.53**	5.09	**5.93**	7.29	**8.59**	9.35	10.34	11.30	12.23	13.12	**15.02**	16.37	17.77	20.30	22.28
	3.00	0.83	1.51	2.80	**4.61**	5.19	**6.04**	7.43	**8.76**	9.54	10.55	11.53	12.48	13.40	**15.35**	16.74	18.19	20.82	22.97
	1.00	0.91	1.67	3.09	**5.08**	5.72	**6.66**	8.18	**9.64**	10.49	11.58	12.64	13.66	14.63	**16.67**	18.08	19.51	21.88	22.73
	1.05	0.92	1.68	3.11	**5.12**	5.77	**6.72**	8.25	**9.72**	10.57	11.68	12.74	13.77	14.76	**16.82**	18.25	19.70	22.12	23.05
140.0	1.20	0.95	1.74	3.22	**5.32**	6.00	**6.99**	8.59	**10.14**	11.03	12.20	13.32	14.41	15.45	**17.64**	19.18	20.74	23.42	24.78
	1.50	0.96	1.77	3.29	**5.43**	6.12	**7.13**	8.78	**10.36**	11.28	12.47	13.63	14.74	15.82	**18.08**	19.67	21.29	24.11	25.70
	3.00	0.98	1.79	3.33	**5.51**	6.21	**7.24**	8.91	**10.52**	11.46	12.68	13.86	15.00	16.10	**18.40**	20.03	21.71	24.62	26.39
	1.00	1.10	2.04	3.80	**6.28**	7.08	**8.25**	10.14	**11.96**	13.01	14.37	15.67	16.92	18.11	**20.57**	22.24	23.88	26.34	25.91
	1.05	1.11	2.05	3.82	**6.32**	7.12	**8.30**	10.21	**12.03**	13.09	14.46	15.78	17.04	18.24	**20.72**	22.41	24.07	26.58	26.23
160.0	1.20	1.14	2.11	3.93	**6.52**	7.35	**8.58**	10.55	**12.45**	13.56	14.98	16.36	17.67	18.93	**21.54**	23.34	25.11	27.88	27.97
	1.50	1.15	2.14	3.99	**6.63**	7.48	**8.72**	10.74	**12.67**	13.80	15.26	16.66	18.01	19.30	**21.98**	23.83	25.66	28.57	28.88
	3.00	1.17	2.16	4.04	**6.71**	7.57	**8.83**	10.87	**12.84**	13.98	15.46	16.89	18.26	19.58	**22.31**	24.19	26.08	29.09	29.57
	1.00	1.29	2.40	4.50	**7.47**	8.42	**9.82**	12.08	**14.23**	15.48	17.08	18.62	20.07	21.46	**24.25**	26.11	27.84	30.04	
	1.05	1.30	2.41	4.52	**7.50**	8.46	**9.87**	12.14	**14.31**	15.56	17.18	18.72	20.19	21.58	**24.41**	26.28	28.03	30.28	
180.0	1.20	1.33	2.47	4.64	**7.71**	8.70	**10.15**	12.49	**14.73**	16.03	17.70	19.30	20.83	22.28	**25.23**	27.20	29.07	31.58	
	1.50	1.34	2.50	4.70	**7.81**	8.82	**10.29**	12.67	**14.95**	16.27	17.97	19.61	21.16	22.64	**25.66**	27.69	29.62	32.26	
	3.00	1.35	2.52	4.74	**7.89**	8.91	**10.40**	12.81	**15.12**	16.46	18.18	19.84	21.42	22.92	**25.99**	28.06	30.04	32.78	
	1.00	1.48	2.77	5.20	**8.64**	9.75	**11.37**	13.98	**16.47**	17.90	19.73	21.47	23.11	24.65	**27.71**	29.65	31.35	32.88	
	1.05	1.49	2.78	5.22	**8.68**	9.79	**11.42**	14.04	**16.54**	17.98	19.83	21.58	23.23	24.78	**27.86**	29.82	31.54	33.12	
200.0	1.20	1.52	2.83	5.34	**8.88**	10.02	**11.70**	14.39	**16.96**	18.45	20.35	22.15	23.87	25.47	**28.68**	30.75	32.59	34.42	
	1.50	1.53	2.87	5.40	**8.99**	10.15	**11.84**	14.58	**17.19**	18.69	20.62	22.46	24.20	25.84	**29.12**	31.23	33.14	35.11	
	3.00	1.54	2.89	5.44	**9.07**	10.24	**11.95**	14.71	**17.35**	18.87	20.83	22.69	24.46	26.12	**29.45**	31.60	33.55	35.63	
	1.00	1.71	3.20	6.03	**10.04**	11.33	**13.21**	16.23	**19.09**	20.73	22.81	24.77	26.59	28.28	**31.52**	33.44	34.92	35.06	
	1.05	1.71	3.21	6.05	**10.08**	11.37	**13.26**	16.29	**19.17**	20.81	22.90	24.87	26.71	28.41	**31.67**	33.61	35.11	35.29	
224.0	1.20	1.74	3.27	6.17	**10.28**	11.60	**13.54**	16.64	**19.59**	21.28	23.42	25.45	27.35	29.10	**32.49**	34.53	36.15	36.60	
	1.50	1.76	3.30	6.23	**10.39**	11.72	**13.68**	16.82	**19.81**	21.52	23.70	25.76	27.68	29.47	**32.93**	35.02	36.70	37.28	
	3.00	1.77	3.32	6.28	**10.47**	11.82	**13.79**	16.96	**19.98**	21.70	23.91	25.99	27.94	29.74	**33.25**	35.39	37.11	37.80	
	1.00	1.95	3.67	6.93	**11.54**	13.02	**15.18**	18.62	**21.86**	23.70	26.01	28.17	30.14	31.93	**35.19**	36.91	37.90		
	1.05	1.95	3.68	6.95	**11.58**	13.06	**15.23**	18.68	**21.94**	23.78	26.11	28.27	30.26	32.06	**35.34**	37.08	38.09		
250.0	1.20	1.98	3.73	7.06	**11.78**	13.29	**15.50**	19.03	**22.36**	24.25	26.63	28.85	30.90	32.75	**36.16**	38.00	39.13		
	1.50	2.00	3.77	7.12	**11.89**	13.41	**15.65**	19.21	**22.58**	24.49	26.91	29.16	31.23	33.12	**36.60**	38.49	39.68		
	3.00	2.01	3.79	7.17	**11.97**	13.51	**15.76**	19.35	**22.74**	24.67	27.11	29.39	31.49	33.39	**36.93**	38.86	40.09		
	1.00	2.23	4.20	7.95	**13.25**	14.94	**17.41**	21.31	**24.95**	26.99	29.54	31.85	33.93	35.75	**38.78**	40.02	40.07		
	1.05	2.23	4.21	7.97	**13.29**	14.98	**17.46**	21.38	**25.03**	27.08	29.63	31.96	34.05	35.87	**38.93**	40.19	40.26		
280.0	1.20	2.26	4.27	8.09	**13.49**	15.22	**17.73**	21.73	**25.45**	27.54	30.15	32.54	34.68	36.57	**39.76**	41.11	41.30		
	1.50	2.28	4.30	8.15	**13.60**	15.34	**17.88**	21.91	**25.67**	27.79	30.43	32.84	35.02	36.93	**40.19**	41.60	41.85		
	3.00	2.29	4.32	8.20	**13.68**	15.43	**17.99**	22.05	**25.84**	27.97	30.63	33.07	35.27	37.21	**40.52**	41.97	42.27		
v_{max}	m/s																50		

Belt length correction factor c_3 — Table 27

L_w	mm	1250	1320	1400	1500	1600	1700	1800	1900	2000	2120	2240	2360	2500	2650	2800	3000	3350	3550
c_3		0.83	0.84	0.85	0.86	0.87	0.88	0.89	0.90	0.91	0.92	0.93	0.93	0.94	0.95	0.96	0.97	0.99	1.00

CONTI FO®-Z XPC

Power rating P_R

Power rating P_R (kW) for a V-belt as a function of small pulley pitch diameter d_{wk}, transmission ratio i, small pulley speed n_k and pitch length L_w = 5600 mm.
Min. pulley diameter $d_{b\,min}$ = 160 mm.

CONTI FO®-Z XPC — Table 28

d_{wk} (mm)	i or 1:i	Speed of small pulley n_k (min^{-1})																	
		100	200	300	400	**700**	800	**950**	1200	**1450**	1600	1880	2000	2200	2400	**2850**	3200	3600	4000
160.0	1.00	1.22	2.23	3.15	4.01	**6.38**	7.12	**8.16**	9.80	**11.30**	12.13	13.56	14.13	14.99	15.76	**17.15**	17.88	18.28	18.21
	1.05	1.24	2.26	3.19	4.07	**6.49**	7.23	**8.30**	9.97	**11.51**	12.37	13.84	14.42	15.31	16.12	**17.57**	18.35	18.81	18.80
	1.20	1.32	2.42	3.43	4.39	**7.05**	7.88	**9.07**	10.94	**12.67**	13.65	15.35	16.02	17.08	18.04	**19.86**	20.92	21.70	22.01
	1.50	1.36	2.50	3.56	4.56	**7.35**	8.21	**9.47**	11.45	**13.29**	14.33	16.14	16.87	18.01	19.06	**21.07**	22.27	23.23	23.70
	3.00	1.39	2.57	3.66	4.69	**7.57**	8.47	**9.77**	11.83	**13.75**	14.84	16.74	17.51	18.71	19.83	**21.98**	23.29	24.38	24.98
180.0	1.00	1.55	2.85	4.06	5.20	**8.38**	9.37	**10.79**	13.03	**15.10**	16.26	18.26	19.06	20.28	21.38	**23.39**	24.46	25.12	25.11
	1.05	1.56	2.88	4.10	5.26	**8.48**	9.48	**10.93**	13.21	**15.31**	16.50	18.54	19.35	20.60	21.73	**23.81**	24.93	25.65	25.70
	1.20	1.64	3.04	4.34	5.58	**9.04**	10.13	**11.70**	14.17	**16.48**	17.78	20.05	20.95	22.37	23.66	**26.10**	27.50	28.54	28.91
	1.50	1.68	3.12	4.47	5.75	**9.34**	10.46	**12.10**	14.68	**17.09**	18.46	20.84	21.80	23.30	24.68	**27.30**	28.86	30.06	30.60
	3.00	1.72	3.19	4.57	5.88	**9.56**	10.72	**12.40**	15.06	**17.55**	18.97	21.45	22.44	24.00	25.44	**28.21**	29.88	31.21	31.88
200.0	1.00	1.87	3.47	4.96	6.38	**10.35**	11.59	**13.39**	16.22	**18.83**	20.31	22.84	23.84	25.39	26.77	**29.27**	30.57	31.29	31.13
	1.05	1.88	3.50	5.00	6.44	**10.45**	11.71	**13.53**	16.39	**19.05**	20.54	23.12	24.13	25.71	27.13	**29.69**	31.04	31.82	31.71
	1.20	1.97	3.66	5.25	6.76	**11.02**	12.35	**14.29**	17.36	**20.21**	21.82	24.63	25.74	27.48	29.05	**31.98**	33.61	34.71	34.92
	1.50	2.01	3.74	5.37	6.93	**11.31**	12.69	**14.69**	17.86	**20.82**	22.50	25.42	26.59	28.41	30.07	**33.19**	34.97	36.23	36.62
	3.00	2.04	3.81	5.47	7.06	**11.54**	12.95	**15.00**	18.25	**21.29**	23.01	26.02	27.23	29.11	30.84	**34.10**	35.99	37.39	37.89
224.0	1.00	2.26	4.20	6.04	7.79	**12.69**	14.23	**16.47**	19.97	**23.22**	25.04	28.16	29.38	31.26	32.93	**35.83**	37.21	37.75	37.05
	1.05	2.27	4.23	6.08	7.85	**12.80**	14.35	**16.60**	20.15	**23.43**	25.28	28.44	29.68	31.59	33.28	**36.25**	37.68	38.27	37.64
	1.20	2.35	4.39	6.32	8.17	**13.36**	14.99	**17.37**	21.11	**24.60**	26.56	29.95	31.28	33.35	35.21	**38.54**	40.25	41.16	40.85
	1.50	2.39	4.48	6.45	8.34	**13.66**	15.33	**17.77**	21.62	**25.21**	27.24	30.74	32.13	34.28	36.22	**39.75**	41.61	42.69	42.54
	3.00	2.42	4.54	6.54	8.46	**13.88**	15.59	**18.07**	22.00	**25.68**	27.75	31.34	32.77	34.98	36.99	**40.66**	42.63	43.84	43.82
250.0	1.00	2.67	5.00	7.19	9.29	**15.20**	17.06	**19.75**	23.97	**27.86**	30.02	33.70	35.13	37.29	39.17	**42.27**	43.49	43.45	41.73
	1.05	2.68	5.03	7.24	9.35	**15.31**	17.18	**19.89**	24.14	**28.07**	30.26	33.98	35.42	37.62	39.53	**42.69**	43.96	43.98	42.32
	1.20	2.76	5.19	7.48	9.67	**15.87**	17.82	**20.65**	25.11	**29.23**	31.54	35.49	37.03	39.38	41.45	**44.98**	46.52	46.87	45.53
	1.50	2.81	5.27	7.60	9.84	**16.17**	18.16	**21.05**	25.62	**29.85**	32.22	36.28	37.88	40.31	42.47	**46.18**	47.88	48.39	47.22
	3.00	2.84	5.34	7.70	9.97	**16.39**	18.42	**21.36**	26.00	**30.31**	32.73	36.89	38.52	41.02	43.23	**47.09**	48.90	49.54	48.50
280.0	1.00	3.14	5.90	8.51	11.02	**18.07**	20.28	**23.47**	28.47	**33.04**	35.56	39.79	41.40	43.79	45.79	**48.75**	49.41	48.19	44.65
	1.05	3.16	5.93	8.56	11.08	**18.17**	20.40	**23.61**	28.65	**33.26**	35.80	40.07	41.70	44.11	46.15	**49.17**	49.88	48.72	45.24
	1.20	3.24	6.09	8.80	11.40	**18.73**	21.04	**24.38**	29.61	**34.42**	37.08	41.58	43.30	45.88	48.07	**51.46**	52.45	51.61	48.45
	1.50	3.28	6.18	8.93	11.57	**19.03**	21.38	**24.78**	30.12	**35.03**	37.76	42.37	44.15	46.81	49.09	**52.67**	53.80	53.14	50.14
	3.00	3.31	6.24	9.02	11.70	**19.25**	21.63	**25.08**	30.50	**35.50**	38.27	42.97	44.79	47.51	49.86	**53.58**	54.83	54.29	51.42
315.0	1.00	3.69	6.95	10.04	13.01	**21.36**	23.97	**27.74**	33.59	**38.87**	41.74	46.45	48.19	50.69	52.65	**54.91**	54.37	50.99	44.33
	1.05	3.71	6.98	10.09	13.07	**21.46**	24.09	**27.88**	33.76	**39.08**	41.98	46.73	48.49	51.01	53.01	**55.33**	54.84	51.52	44.92
	1.20	3.79	7.14	10.33	13.39	**22.02**	24.73	**28.64**	34.73	**40.25**	43.26	48.24	50.09	52.78	54.93	**57.62**	57.41	54.41	48.13
	1.50	3.83	7.23	10.46	13.56	**22.32**	25.07	**29.04**	35.23	**40.86**	43.94	49.03	50.94	53.71	55.95	**58.83**	58.77	55.93	49.82
	3.00	3.86	7.29	10.55	13.69	**22.54**	25.32	**29.34**	35.62	**41.32**	44.45	49.63	51.58	54.41	56.71	**59.74**	59.79	57.08	51.10
355.0	1.00	4.32	8.15	11.78	15.27	**25.06**	28.11	**32.49**	39.23	**45.21**	48.39	53.43	55.20	57.59	59.24	**59.91**	57.19	50.16	38.49
	1.05	4.33	8.17	11.82	15.32	**25.16**	28.23	**32.63**	39.41	**45.42**	48.62	53.70	55.49	57.92	59.59	**60.33**	57.66	50.69	39.08
	1.20	4.41	8.34	12.06	15.65	**25.72**	28.87	**33.39**	40.37	**46.58**	49.91	55.21	57.10	59.68	61.52	**62.62**	60.23	53.58	42.29
	1.50	4.45	8.42	12.19	15.82	**26.02**	29.21	**33.79**	40.88	**47.20**	50.58	56.01	57.94	60.61	62.53	**63.82**	61.58	55.10	43.98
	3.00	4.49	8.48	12.28	15.94	**26.24**	29.46	**34.10**	41.26	**47.66**	51.09	56.61	58.58	61.32	63.30	**64.73**	62.60	56.25	45.26
400.0	1.00	5.01	9.47	13.71	17.77	**29.14**	32.67	**37.69**	45.31	**51.90**	55.29	60.38	62.03	63.98	64.88				
	1.05	5.03	9.50	13.75	17.83	**29.25**	32.78	**37.83**	45.49	**52.11**	55.53	60.66	62.32	64.30	65.23				
	1.20	5.11	9.66	13.99	18.15	**29.81**	33.43	**38.59**	46.45	**53.28**	56.81	62.17	63.92	66.07	67.16				
	1.50	5.15	9.75	14.12	18.32	**30.10**	33.76	**38.99**	46.96	**53.89**	57.49	62.96	64.77	67.00	68.17				
	3.00	5.18	9.81	14.21	18.45	**30.33**	34.02	**39.30**	47.34	**54.35**	58.00	63.56	65.41	67.70	68.94				
450.0	1.00	5.78	10.94	15.83	20.52	**33.58**	37.60	**43.27**	51.72	**58.74**	62.19	66.90	68.17	69.18					
	1.05	5.79	10.96	15.87	20.58	**33.69**	37.71	**43.41**	51.89	**58.96**	62.43	67.18	68.46	69.50					
	1.20	5.88	11.13	16.11	20.90	**34.25**	38.35	**44.17**	52.86	**60.12**	63.71	68.69	70.07	71.27					
	1.50	5.92	11.21	16.24	21.07	**34.55**	38.69	**44.57**	53.36	**60.73**	64.39	69.48	70.91	72.20					
	3.00	5.95	11.27	16.34	21.20	**34.77**	38.95	**44.87**	53.75	**61.20**	64.90	70.08	71.55	72.90					
v_{max}	m/s	50																	

Belt length correction factor c_3 — Table 29

L_w	mm	2000	2120	2240	2360	2500	2650	2800	3000	3150	3350	3550
c_3		0.85	0.86	0.86	0.87	0.88	0.89	0.90	0.91	0.91	0.92	0.93

CONTI ULTRAFLEX® SPZ

Power rating P_R

Power rating P_R (kW) for a V-belt as a function of small pulley pitch diameter d_{wk}, transmission ratio i, small pulley speed n_k and pitch length L_w = 1600 mm.
Min. pulley diameter $d_{b\,min}$ = 63 mm.

CONTI ULTRAFLEX® SPZ — Table 30

d_{wk} (mm)	i or 1:i	Speed of small pulley n_k (min^{-1})																	
		200	350	500	**700**	800	**950**	1200	**1450**	1600	1800	2000	2500	**2850**	3500	4000	5000	6000	8000
	1.00	0.18	0.29	0.38	**0.50**	0.56	**0.64**	0.76	**0.88**	0.95	1.03	1.11	1.29	**1.41**	1.59	1.70	1.85	1.90	1.65
	1.05	0.18	0.29	0.39	**0.51**	0.57	**0.65**	0.78	**0.90**	0.97	1.06	1.14	1.33	**1.45**	1.64	1.76	1.92	1.99	1.76
63.0	1.20	0.20	0.32	0.43	**0.57**	0.63	**0.72**	0.87	**1.01**	1.09	1.20	1.29	1.52	**1.67**	1.91	2.07	2.31	2.45	2.38
	1.50	0.21	0.33	0.45	**0.59**	0.66	**0.76**	0.92	**1.07**	1.16	1.27	1.37	1.62	**1.78**	2.05	2.23	2.51	2.69	2.70
	3.00	0.21	0.34	0.46	**0.62**	0.69	**0.79**	0.96	**1.12**	1.21	1.32	1.44	1.70	**1.87**	2.16	2.35	2.67	2.88	2.95
	1.00	0.24	0.38	0.52	**0.68**	0.76	**0.88**	1.06	**1.23**	1.33	1.46	1.58	1.87	**2.05**	2.35	2.54	2.84	3.00	2.83
	1.05	0.24	0.39	0.52	**0.69**	0.77	**0.89**	1.08	**1.26**	1.36	1.49	1.61	1.90	**2.09**	2.40	2.60	2.91	3.08	2.94
71.0	1.20	0.26	0.41	0.56	**0.75**	0.84	**0.97**	1.17	**1.37**	1.48	1.63	1.77	2.10	**2.31**	2.67	2.91	3.30	3.54	3.56
	1.50	0.26	0.43	0.58	**0.78**	0.87	**1.00**	1.22	**1.43**	1.55	1.70	1.85	2.20	**2.43**	2.81	3.07	3.50	3.79	3.88
	3.00	0.27	0.44	0.60	**0.80**	0.89	**1.03**	1.26	**1.47**	1.59	1.75	1.91	2.28	**2.51**	2.92	3.20	3.65	3.97	4.13
	1.00	0.30	0.49	0.66	**0.89**	0.99	**1.15**	1.39	**1.63**	1.76	1.94	2.11	2.50	**2.76**	3.18	3.46	3.90	4.14	3.97
	1.05	0.30	0.49	0.67	**0.90**	1.00	**1.16**	1.41	**1.65**	1.79	1.97	2.14	2.54	**2.80**	3.23	3.52	3.97	4.23	4.08
80.0	1.20	0.32	0.52	0.71	**0.95**	1.07	**1.23**	1.50	**1.76**	1.91	2.10	2.29	2.73	**3.02**	3.50	3.83	4.35	4.69	4.70
	1.50	0.33	0.53	0.73	**0.98**	1.10	**1.27**	1.55	**1.82**	1.98	2.18	2.37	2.83	**3.14**	3.65	3.99	4.56	4.93	5.03
	3.00	0.33	0.55	0.75	**1.00**	1.12	**1.30**	1.59	**1.86**	2.03	2.23	2.43	2.91	**3.22**	3.75	4.11	4.71	5.12	5.27
	1.00	0.37	0.61	0.83	**1.11**	1.24	**1.44**	1.76	**2.06**	2.24	2.46	2.68	3.20	**3.53**	4.08	4.45	5.00	5.30	4.99
	1.05	0.37	0.61	0.84	**1.12**	1.26	**1.46**	1.78	**2.08**	2.26	2.49	2.71	3.23	**3.57**	4.13	4.50	5.07	5.39	5.10
90.0	1.20	0.39	0.64	0.87	**1.17**	1.32	**1.53**	1.87	**2.19**	2.38	2.63	2.87	3.43	**3.79**	4.40	4.81	5.46	5.85	5.72
	1.50	0.40	0.65	0.89	**1.20**	1.35	**1.57**	1.92	**2.25**	2.45	2.70	2.95	3.53	**3.91**	4.54	4.97	5.66	6.09	6.04
	3.00	0.40	0.66	0.91	**1.22**	1.38	**1.60**	1.95	**2.30**	2.50	2.76	3.01	3.60	**3.99**	4.65	5.10	5.82	6.28	6.29
	1.00	0.44	0.72	0.99	**1.33**	1.49	**1.74**	2.12	**2.49**	2.70	2.98	3.25	3.88	**4.28**	4.95	5.38	6.03	6.33	5.71
	1.05	0.44	0.73	1.00	**1.34**	1.51	**1.75**	2.14	**2.51**	2.73	3.01	3.28	3.91	**4.32**	5.00	5.44	6.10	6.42	5.82
100.0	1.20	0.46	0.75	1.04	**1.39**	1.57	**1.82**	2.23	**2.62**	2.85	3.14	3.43	4.10	**4.54**	5.27	5.75	6.49	6.88	6.44
	1.50	0.47	0.77	1.06	**1.42**	1.60	**1.86**	2.28	**2.68**	2.91	3.22	3.51	4.21	**4.66**	5.41	5.91	6.69	7.12	6.77
	3.00	0.47	0.78	1.07	**1.44**	1.63	**1.89**	2.32	**2.73**	2.96	3.27	3.57	4.28	**4.74**	5.52	6.03	6.84	7.31	7.01
	1.00	0.52	0.86	1.18	**1.59**	1.79	**2.08**	2.55	**3.00**	3.25	3.59	3.91	4.67	**5.15**	5.94	6.45	7.15	7.38	
	1.05	0.52	0.87	1.19	**1.60**	1.80	**2.10**	2.57	**3.02**	3.28	3.62	3.94	4.70	**5.19**	5.99	6.50	7.22	7.47	
112.0	1.20	0.54	0.89	1.23	**1.66**	1.87	**2.17**	2.66	**3.13**	3.40	3.75	4.10	4.90	**5.41**	6.26	6.81	7.60	7.93	
	1.50	0.55	0.91	1.25	**1.69**	1.90	**2.21**	2.71	**3.19**	3.47	3.83	4.18	5.00	**5.53**	6.40	6.97	7.81	8.17	
	3.00	0.55	0.92	1.26	**1.71**	1.92	**2.24**	2.74	**3.23**	3.52	3.88	4.24	5.08	**5.62**	6.51	7.10	7.96	8.36	
	1.00	0.61	1.01	1.39	**1.88**	2.11	**2.45**	3.01	**3.54**	3.84	4.24	4.62	5.50	**6.06**	6.96	7.51	8.21	8.27	
	1.05	0.61	1.02	1.40	**1.89**	2.12	**2.47**	3.02	**3.56**	3.86	4.26	4.65	5.54	**6.10**	7.01	7.57	8.28	8.35	
125.0	1.20	0.63	1.04	1.44	**1.94**	2.18	**2.54**	3.12	**3.67**	3.99	4.40	4.80	5.73	**6.32**	7.28	7.88	8.66	8.81	
	1.50	0.64	1.06	1.46	**1.97**	2.22	**2.58**	3.17	**3.73**	4.05	4.48	4.88	5.83	**6.44**	7.42	8.04	8.87	9.06	
	3.00	0.64	1.07	1.47	**1.99**	2.24	**2.61**	3.20	**3.77**	4.10	4.53	4.94	5.91	**6.53**	7.53	8.17	9.02	9.24	
	1.00	0.71	1.18	1.63	**2.20**	2.47	**2.88**	3.53	**4.15**	4.51	4.97	5.41	6.43	**7.07**	8.06	8.63	9.22	8.93	
	1.05	0.71	1.19	1.63	**2.21**	2.49	**2.89**	3.55	**4.17**	4.53	4.99	5.44	6.47	**7.11**	8.11	8.69	9.29	9.01	
140.0	1.20	0.73	1.21	1.67	**2.26**	2.55	**2.97**	3.64	**4.28**	4.65	5.13	5.59	6.66	**7.33**	8.38	9.00	9.67	9.47	
	1.50	0.74	1.23	1.69	**2.29**	2.58	**3.00**	3.69	**4.34**	4.72	5.21	5.68	6.76	**7.45**	8.52	9.16	9.88	9.72	
	3.00	0.74	1.24	1.71	**2.31**	2.60	**3.03**	3.72	**4.38**	4.77	5.26	5.74	6.84	**7.53**	8.63	9.28	10.03	9.90	
	1.00	0.85	1.41	1.94	**2.62**	2.95	**3.44**	4.21	**4.95**	5.37	5.92	6.44	7.61	**8.32**	9.38	9.91	10.17		
	1.05	0.85	1.41	1.95	**2.63**	2.96	**3.45**	4.23	**4.97**	5.40	5.94	6.46	7.65	**8.37**	9.43	9.97	10.24		
160.0	1.20	0.86	1.44	1.99	**2.69**	3.03	**3.52**	4.32	**5.08**	5.52	6.08	6.62	7.84	**8.59**	9.70	10.28	10.62		
	1.50	0.87	1.45	2.01	**2.72**	3.06	**3.56**	4.37	**5.14**	5.58	6.16	6.70	7.94	**8.70**	9.84	10.44	10.83		
	3.00	0.88	1.46	2.02	**2.74**	3.08	**3.59**	4.41	**5.19**	5.63	6.21	6.76	8.02	**8.79**	9.95	10.57	10.98		
	1.00	0.98	1.63	2.25	**3.04**	3.43	**3.99**	4.88	**5.73**	6.21	6.83	7.42	8.72	**9.48**	10.51	10.93			
	1.05	0.98	1.63	2.26	**3.05**	3.44	**4.00**	4.90	**5.75**	6.24	6.86	7.45	8.75	**9.52**	10.56	10.99			
180.0	1.20	1.00	1.66	2.30	**3.11**	3.50	**4.07**	4.99	**5.86**	6.36	7.00	7.60	8.95	**9.74**	10.83	11.30			
	1.50	1.01	1.68	2.32	**3.14**	3.53	**4.11**	5.04	**5.92**	6.43	7.07	7.68	9.05	**9.85**	10.97	11.46			
	3.00	1.01	1.69	2.33	**3.16**	3.56	**4.14**	5.08	**5.97**	6.48	7.13	7.74	9.12	**9.94**	11.08	11.58			
v_{max}	m/s																40		

Belt length correction factor c_3 — Table 31

L_w	mm	512	630	710	800	900	1000	1120	1250	1400	1500	1600	1800	2000	2240	2500	2800	3150	3550
c_3		0.79	0.83	0.85	0.87	0.89	0.91	0.93	0.95	0.98	0.99	1.00	1.02	1.04	1.06	1.08	1.10	1.12	1.15

CONTI ULTRAFLEX® SPA

Power rating P_R

Power rating P_R (kW) for a V-belt as a function of small pulley pitch diameter d_{wk}, transmission ratio i, small pulley speed n_k and pitch length L_w = 2500 mm.
Min. pulley diameter $d_{b\,min}$ = 90 mm.

CONTI ULTRAFLEX® SPA

Table 32

d_{wk} (mm)	i or 1:i	Speed of small pulley n_k (min^{-1})																	
		100	200	350	500	**700**	800	**950**	1200	**1450**	1600	1800	2000	2500	**2850**	3500	4000	5000	6000
90.0	1.00	0.23	0.42	0.67	0.89	**1.17**	1.30	**1.48**	1.77	**2.03**	2.18	2.36	2.54	2.91	**3.13**	3.44	3.57	3.57	3.17
	1.05	0.24	0.43	0.68	0.91	**1.19**	1.32	**1.51**	1.81	**2.08**	2.23	2.42	2.60	3.00	**3.23**	3.55	3.70	3.74	3.37
	1.20	0.26	0.46	0.74	1.00	**1.32**	1.47	**1.68**	2.02	**2.34**	2.52	2.75	2.96	3.44	**3.74**	4.18	4.42	4.64	4.44
	1.50	0.27	0.48	0.78	1.05	**1.38**	1.54	**1.77**	2.14	**2.48**	2.67	2.92	3.15	3.68	**4.01**	4.51	4.80	5.11	5.01
	3.00	0.27	0.50	0.80	1.08	**1.43**	1.60	**1.84**	2.22	**2.58**	2.78	3.04	3.29	3.86	**4.21**	4.76	5.09	5.47	5.44
100.0	1.00	0.30	0.54	0.86	1.17	**1.54**	1.72	**1.97**	2.37	**2.75**	2.96	3.23	3.48	4.05	**4.39**	4.89	5.16	5.32	4.95
	1.05	0.30	0.54	0.88	1.18	**1.56**	1.74	**2.00**	2.41	**2.79**	3.01	3.29	3.55	4.13	**4.48**	5.01	5.29	5.49	5.15
	1.20	0.32	0.58	0.94	1.27	**1.69**	1.89	**2.17**	2.63	**3.05**	3.30	3.61	3.91	4.58	**5.00**	5.64	6.00	6.38	6.22
	1.50	0.33	0.60	0.97	1.32	**1.75**	1.96	**2.26**	2.74	**3.19**	3.45	3.78	4.09	4.82	**5.27**	5.97	6.38	6.86	6.79
	3.00	0.33	0.61	1.00	1.35	**1.80**	2.02	**2.33**	2.83	**3.29**	3.56	3.91	4.24	5.00	**5.47**	6.22	6.67	7.21	7.22
112.0	1.00	0.37	0.67	1.10	1.49	**1.98**	2.21	**2.55**	3.09	**3.59**	3.88	4.25	4.59	5.38	**5.86**	6.57	6.96	7.24	6.79
	1.05	0.37	0.68	1.11	1.50	**2.00**	2.24	**2.58**	3.13	**3.64**	3.93	4.31	4.66	5.46	**5.95**	6.69	7.09	7.40	6.98
	1.20	0.39	0.72	1.17	1.59	**2.13**	2.38	**2.75**	3.34	**3.90**	4.22	4.63	5.02	5.91	**6.46**	7.31	7.80	8.30	8.06
	1.50	0.40	0.74	1.20	1.64	**2.19**	2.46	**2.84**	3.46	**4.04**	4.37	4.80	5.21	6.15	**6.73**	7.65	8.18	8.77	8.63
	3.00	0.41	0.75	1.23	1.68	**2.24**	2.51	**2.91**	3.54	**4.14**	4.48	4.93	5.35	6.33	**6.94**	7.90	8.47	9.13	9.06
125.0	1.00	0.44	0.82	1.34	1.83	**2.45**	2.74	**3.17**	3.85	**4.49**	4.86	5.33	5.78	6.78	**7.39**	8.30	8.78	9.08	8.38
	1.05	0.45	0.83	1.36	1.85	**2.47**	2.77	**3.20**	3.89	**4.54**	4.91	5.39	5.84	6.87	**7.49**	8.41	8.91	9.24	8.58
	1.20	0.47	0.87	1.42	1.94	**2.60**	2.91	**3.37**	4.11	**4.80**	5.20	5.71	6.20	7.31	**8.00**	9.04	9.62	10.14	9.65
	1.50	0.48	0.88	1.45	1.99	**2.66**	2.99	**3.46**	4.22	**4.94**	5.35	5.88	6.39	7.55	**8.27**	9.37	10.00	10.61	10.22
	3.00	0.48	0.90	1.48	2.02	**2.71**	3.05	**3.53**	4.31	**5.04**	5.47	6.01	6.53	7.73	**8.47**	9.62	10.29	10.97	10.65
140.0	1.00	0.53	0.99	1.63	2.23	**2.99**	3.35	**3.88**	4.72	**5.52**	5.98	6.56	7.11	8.35	**9.09**	10.16	10.69	10.86	9.65
	1.05	0.54	1.00	1.64	2.25	**3.01**	3.38	**3.91**	4.76	**5.57**	6.03	6.62	7.17	8.43	**9.18**	10.28	10.82	11.03	9.85
	1.20	0.55	1.03	1.70	2.34	**3.14**	3.52	**4.08**	4.98	**5.83**	6.32	6.94	7.53	8.88	**9.69**	10.91	11.54	11.92	10.93
	1.50	0.56	1.05	1.74	2.38	**3.20**	3.60	**4.17**	5.09	**5.97**	6.47	7.11	7.72	9.11	**9.96**	11.24	11.92	12.40	11.49
	3.00	0.57	1.07	1.76	2.42	**3.25**	3.65	**4.24**	5.18	**6.07**	6.58	7.24	7.86	9.29	**10.17**	11.49	12.21	12.75	11.92
160.0	1.00	0.65	1.22	2.01	2.75	**3.70**	4.15	**4.81**	5.87	**6.86**	7.43	8.15	8.83	10.34	**11.22**	12.42	12.92	12.62	
	1.05	0.65	1.22	2.02	2.77	**3.72**	4.18	**4.84**	5.91	**6.91**	7.48	8.21	8.89	10.42	**11.31**	12.53	13.05	12.78	
	1.20	0.67	1.26	2.08	2.86	**3.85**	4.32	**5.02**	6.12	**7.17**	7.77	8.53	9.25	10.87	**11.82**	13.16	13.77	13.68	
	1.50	0.68	1.28	2.11	2.90	**3.91**	4.40	**5.11**	6.24	**7.31**	7.92	8.70	9.44	11.10	**12.09**	13.49	14.15	14.15	
	3.00	0.69	1.29	2.14	2.94	**3.96**	4.45	**5.17**	6.32	**7.41**	8.03	8.83	9.58	11.28	**12.29**	13.74	14.43	14.51	
180.0	1.00	0.77	1.44	2.38	3.27	**4.40**	4.94	**5.73**	6.99	**8.17**	8.84	9.69	10.48	12.21	**13.18**	14.39	14.73		
	1.05	0.77	1.44	2.39	3.28	**4.42**	4.97	**5.76**	7.03	**8.22**	8.89	9.75	10.55	12.29	**13.27**	14.50	14.86		
	1.20	0.79	1.48	2.45	3.37	**4.55**	5.11	**5.93**	7.24	**8.48**	9.18	10.07	10.90	12.74	**13.78**	15.13	15.57		
	1.50	0.80	1.50	2.49	3.42	**4.61**	5.19	**6.02**	7.36	**8.61**	9.33	10.24	11.09	12.98	**14.05**	15.46	15.95		
	3.00	0.80	1.51	2.51	3.46	**4.66**	5.24	**6.09**	7.44	**8.72**	9.44	10.37	11.24	13.15	**14.26**	15.71	16.24		
200.0	1.00	0.88	1.66	2.75	3.78	**5.09**	5.72	**6.64**	8.09	**9.44**	10.21	11.17	12.06	13.96	**14.96**	16.04	16.07		
	1.05	0.89	1.66	2.76	3.80	**5.11**	5.75	**6.67**	8.13	**9.49**	10.26	11.23	12.13	14.04	**15.06**	16.16	16.20		
	1.20	0.90	1.70	2.82	3.89	**5.24**	5.89	**6.84**	8.34	**9.75**	10.55	11.55	12.49	14.49	**15.57**	16.79	16.92		
	1.50	0.91	1.72	2.85	3.93	**5.30**	5.97	**6.93**	8.46	**9.89**	10.70	11.72	12.68	14.72	**15.84**	17.12	17.30		
	3.00	0.92	1.73	2.88	3.97	**5.35**	6.02	**7.00**	8.54	**9.99**	10.81	11.85	12.82	14.90	**16.04**	17.37	17.59		
224.0	1.00	1.02	1.92	3.19	4.39	**5.91**	6.64	**7.70**	9.38	**10.93**	11.80	12.88	13.86	15.87	**16.85**	17.57			
	1.05	1.02	1.93	3.20	4.40	**5.93**	6.67	**7.73**	9.42	**10.98**	11.85	12.94	13.93	15.96	**16.94**	17.68			
	1.20	1.04	1.96	3.26	4.49	**6.06**	6.81	**7.91**	9.63	**11.24**	12.14	13.26	14.29	16.40	**17.45**	18.31			
	1.50	1.05	1.98	3.29	4.54	**6.13**	6.89	**8.00**	9.75	**11.37**	12.29	13.43	14.48	16.64	**17.72**	18.64			
	3.00	1.06	2.00	3.32	4.58	**6.18**	6.94	**8.06**	9.83	**11.48**	12.40	13.56	14.62	16.82	**17.93**	18.89			
250.0	1.00	1.17	2.20	3.66	5.04	**6.79**	7.62	**8.84**	10.74	**12.48**	13.44	14.63	15.68	17.71	**18.55**				
	1.05	1.17	2.21	3.67	5.05	**6.81**	7.65	**8.87**	10.78	**12.53**	13.50	14.68	15.75	17.79	**18.64**				
	1.20	1.19	2.24	3.73	5.14	**6.94**	7.79	**9.04**	10.99	**12.79**	13.78	15.01	16.11	18.24	**19.15**				
	1.50	1.20	2.26	3.76	5.19	**7.00**	7.87	**9.13**	11.11	**12.93**	13.93	15.18	16.30	18.48	**19.42**				
	3.00	1.21	2.28	3.79	5.23	**7.05**	7.93	**9.20**	11.19	**13.03**	14.05	15.31	16.44	18.66	**19.62**				
v_{max}	m/s	40																	

Belt length correction factor c_3

Table 33

L_w	mm	647	800	900	1000	1120	1250	1400	1600	1800	2000	2240	2500	2650	2800	3150	3550	4000	4500
c_3		0.77	0.81	0.83	0.85	0.86	0.88	0.90	0.92	0.94	0.96	0.98	1.00	1.01	1.02	1.04	1.06	1.08	1.10

CONTI ULTRAFLEX® SPB

Power rating P_R

Power rating P_R (kW) for a V-belt as a function of small pulley pitch diameter d_{wk}, transmission ratio i, small pulley speed n_k and pitch length L_w = 3550 mm.
Min. pulley diameter $d_{b\,min}$ = 140 mm.

CONTI ULTRAFLEX® SPB

Table 34

d_{wk} (mm)	i or 1:i	Speed of small pulley n_k (min^{-1})																	
		50	100	200	350	500	**700**	800	**950**	1200	**1450**	1600	1800	2000	2500	**2850**	3500	4000	5000
140.0	1.00	0.36	0.66	1.20	1.93	2.60	**3.43**	3.82	**4.38**	5.25	**6.04**	6.48	7.03	7.52	8.52	**9.02**	9.43	9.25	7.38
	1.05	0.36	0.67	1.21	1.95	2.64	**3.48**	3.88	**4.45**	5.34	**6.15**	6.60	7.16	7.66	8.70	**9.22**	9.68	9.53	7.74
	1.20	0.38	0.70	1.29	2.09	2.83	**3.76**	4.19	**4.82**	5.81	**6.72**	7.23	7.86	8.45	9.69	**10.34**	11.06	11.11	9.71
	1.50	0.39	0.73	1.33	2.17	2.94	**3.90**	4.36	**5.02**	6.06	**7.02**	7.56	8.24	8.87	10.21	**10.93**	11.78	11.94	10.74
	3.00	0.40	0.74	1.36	2.22	3.02	**4.01**	4.48	**5.17**	6.25	**7.25**	7.81	8.52	9.18	10.60	**11.38**	12.33	12.56	11.53
160.0	1.00	0.46	0.85	1.56	2.54	3.45	**4.58**	5.12	**5.89**	7.10	**8.21**	8.83	9.60	10.30	11.73	**12.44**	13.03	12.77	10.06
	1.05	0.46	0.85	1.57	2.56	3.48	**4.63**	5.17	**5.96**	7.19	**8.32**	8.95	9.73	10.44	11.91	**12.64**	13.28	13.06	10.42
	1.20	0.48	0.89	1.65	2.70	3.68	**4.90**	5.49	**6.33**	7.66	**8.89**	9.58	10.44	11.23	12.89	**13.77**	14.66	14.63	12.39
	1.50	0.49	0.91	1.69	2.77	3.78	**5.05**	5.65	**6.53**	7.91	**9.19**	9.91	10.81	11.64	13.41	**14.36**	15.39	15.46	13.42
	3.00	0.50	0.93	1.73	2.83	3.86	**5.16**	5.78	**6.68**	8.10	**9.41**	10.16	11.09	11.96	13.80	**14.80**	15.93	16.09	14.20
180.0	1.00	0.56	1.04	1.92	3.14	4.28	**5.71**	6.39	**7.38**	8.92	**10.33**	11.11	12.08	12.97	14.74	**15.58**	16.15	15.59	
	1.05	0.56	1.04	1.93	3.17	4.32	**5.76**	6.45	**7.45**	9.00	**10.43**	11.23	12.21	13.11	14.92	**15.79**	16.40	15.88	
	1.20	0.58	1.08	2.01	3.30	4.51	**6.04**	6.77	**7.82**	9.47	**11.00**	11.86	12.92	13.90	15.91	**16.91**	17.78	17.45	
	1.50	0.59	1.10	2.05	3.38	4.62	**6.18**	6.93	**8.02**	9.72	**11.30**	12.19	13.30	14.31	16.42	**17.50**	18.51	18.28	
	3.00	0.60	1.12	2.08	3.43	4.70	**6.29**	7.06	**8.17**	9.91	**11.53**	12.44	13.58	14.62	16.81	**17.95**	19.05	18.91	
200.0	1.00	0.65	1.22	2.27	3.74	5.11	**6.83**	7.66	**8.84**	10.69	**12.39**	13.33	14.48	15.52	17.54	**18.43**	18.74	17.63	
	1.05	0.66	1.23	2.29	3.76	5.15	**6.88**	7.71	**8.91**	10.78	**12.49**	13.44	14.61	15.66	17.72	**18.64**	18.99	17.92	
	1.20	0.68	1.27	2.37	3.90	5.34	**7.16**	8.03	**9.28**	11.25	**13.06**	14.07	15.32	16.45	18.71	**19.76**	20.37	19.49	
	1.50	0.69	1.29	2.41	3.97	5.45	**7.30**	8.19	**9.48**	11.50	**13.36**	14.40	15.69	16.86	19.22	**20.35**	21.09	20.32	
	3.00	0.69	1.30	2.44	4.03	5.52	**7.41**	8.32	**9.63**	11.69	**13.59**	14.65	15.97	17.17	19.62	**20.79**	21.64	20.95	
224.0	1.00	0.77	1.44	2.70	4.45	6.09	**8.16**	9.15	**10.57**	12.78	**14.79**	15.89	17.23	18.41	20.60	**21.41**	21.07		
	1.05	0.77	1.45	2.71	4.47	6.13	**8.21**	9.21	**10.64**	12.87	**14.89**	16.01	17.36	18.56	20.78	**21.62**	21.33		
	1.20	0.79	1.49	2.79	4.61	6.33	**8.49**	9.52	**11.01**	13.34	**15.46**	16.63	18.07	19.34	21.77	**22.74**	22.70		
	1.50	0.80	1.51	2.83	4.68	6.43	**8.63**	9.69	**11.21**	13.59	**15.76**	16.97	18.44	19.76	22.29	**23.33**	23.43		
	3.00	0.81	1.53	2.86	4.74	6.51	**8.74**	9.81	**11.36**	13.78	**15.99**	17.22	18.72	20.07	22.68	**23.78**	23.98		
250.0	1.00	0.89	1.68	3.15	5.21	7.15	**9.58**	10.74	**12.40**	14.98	**17.29**	18.54	20.04	21.33	23.52	**24.06**			
	1.05	0.90	1.69	3.17	5.23	7.18	**9.63**	10.80	**12.47**	15.07	**17.40**	18.66	20.17	21.47	23.70	**24.27**			
	1.20	0.92	1.73	3.25	5.37	7.38	**9.91**	11.11	**12.85**	15.54	**17.97**	19.29	20.88	22.26	24.68	**25.39**			
	1.50	0.93	1.75	3.29	5.44	7.48	**10.05**	11.28	**13.04**	15.79	**18.27**	19.62	21.25	22.67	25.20	**25.98**			
	3.00	0.94	1.77	3.32	5.50	7.56	**10.16**	11.40	**13.19**	15.98	**18.50**	19.87	21.53	22.99	25.59	**26.43**			
280.0	1.00	1.04	1.96	3.67	6.08	8.35	**11.19**	12.54	**14.47**	17.44	**20.05**	21.44	23.06	24.39	26.31	**26.30**			
	1.05	1.04	1.96	3.69	6.11	8.38	**11.24**	12.60	**14.54**	17.52	**20.16**	21.55	23.19	24.53	26.49	**26.50**			
	1.20	1.06	2.00	3.77	6.24	8.58	**11.52**	12.91	**14.91**	17.99	**20.73**	22.18	23.90	25.32	27.47	**27.62**			
	1.50	1.07	2.02	3.81	6.32	8.68	**11.66**	13.08	**15.11**	18.24	**21.03**	22.52	24.27	25.74	27.99	**28.21**			
	3.00	1.08	2.04	3.84	6.37	8.76	**11.77**	13.20	**15.26**	18.43	**21.26**	22.77	24.55	26.05	28.38	**28.66**			
315.0	1.00	1.20	2.27	4.28	7.09	9.73	**13.04**	14.60	**16.82**	20.19	**23.08**	24.57	26.24	27.51	28.72				
	1.05	1.21	2.28	4.29	7.11	9.77	**13.09**	14.66	**16.89**	20.27	**23.19**	24.69	26.37	27.65	28.90				
	1.20	1.23	2.32	4.37	7.25	9.96	**13.36**	14.97	**17.26**	20.74	**23.76**	25.32	27.08	28.44	29.89				
	1.50	1.24	2.34	4.41	7.32	10.07	**13.51**	15.14	**17.46**	20.99	**24.06**	25.65	27.45	28.85	30.40				
	3.00	1.24	2.36	4.44	7.38	10.15	**13.62**	15.26	**17.61**	21.18	**24.29**	25.90	27.73	29.17	30.80				
355.0	1.00	1.39	2.63	4.96	8.22	11.29	**15.10**	16.89	**19.41**	23.16	**26.28**	27.80	29.39	30.42					
	1.05	1.39	2.64	4.97	8.25	11.32	**15.15**	16.95	**19.48**	23.25	**26.38**	27.92	29.52	30.56					
	1.20	1.41	2.68	5.05	8.38	11.52	**15.43**	17.26	**19.86**	23.72	**26.95**	28.55	30.23	31.35					
	1.50	1.42	2.70	5.09	8.46	11.62	**15.57**	17.43	**20.05**	23.97	**27.25**	28.88	30.60	31.77					
	3.00	1.43	2.71	5.12	8.51	11.70	**15.68**	17.55	**20.20**	24.16	**27.48**	29.13	30.88	32.08					
400.0	1.00	1.60	3.03	5.72	9.48	13.01	**17.36**	19.38	**22.21**	26.29	**29.50**	30.94	32.25	32.77					
	1.05	1.60	3.04	5.73	9.51	13.05	**17.41**	19.44	**22.27**	26.38	**29.60**	31.06	32.38	32.92					
	1.20	1.62	3.08	5.81	9.65	13.24	**17.69**	19.76	**22.65**	26.85	**30.17**	31.69	33.08	33.70					
	1.50	1.63	3.10	5.85	9.72	13.35	**17.83**	19.92	**22.85**	27.10	**30.47**	32.02	33.46	34.12					
	3.00	1.64	3.11	5.88	9.77	13.42	**17.94**	20.05	**22.99**	27.29	**30.70**	32.27	33.74	34.43					
v_{max}	m/s	40																	

Belt length correction factor c_3

Table 35

L_w	mm	1250	1400	1600	1800	2000	2240	2500	2800	3150	3550	4000	4500	5000	5600	6300	7100	7500	8000
c_3		0.88	0.85	0.87	0.89	0.91	0.93	0.94	0.96	0.98	1.00	1.02	1.04	1.05	1.07	1.09	1.11	1.12	1.13

CONTI ULTRAFLEX® SPC

Power rating P_R
Power rating P_R (kW) for a V-belt as a function of small pulley pitch diameter d_{wk}, transmission ratio i, small pulley speed n_k and pitch length L_w = 5600 mm.
Min. pulley diameter $d_{b\ min}$ = 224 mm.

CONTI ULTRAFLEX® SPC

Table 36

d_{wk} (mm)	i or 1:i	Speed of small pulley n_k (min^{-1})																	
		50	100	200	350	500	**700**	800	**950**	1200	1300	**1450**	1600	1700	1800	2000	2500	**2850**	3500
224.0	1.00	1.07	1.97	3.61	5.83	7.86	**10.35**	11.51	**13.14**	15.57	16.45	**17.64**	18.69	19.31	19.86	20.74	21.54	**20.78**	16.00
	1.05	1.08	1.99	3.65	5.90	7.96	**10.49**	11.67	**13.33**	15.81	16.70	**17.93**	19.01	19.64	20.21	21.13	22.04	**21.34**	16.69
	1.20	1.13	2.10	3.86	6.27	8.50	**11.24**	12.53	**14.35**	17.10	18.10	**19.49**	20.73	21.47	22.15	23.28	24.73	**24.41**	20.45
	1.50	1.16	2.16	3.98	6.47	8.78	**11.64**	12.98	**14.89**	17.78	18.84	**20.31**	21.64	22.44	23.17	24.42	26.14	**26.03**	22.44
	3.00	1.18	2.20	4.06	6.62	9.00	**11.94**	13.32	**15.29**	18.30	19.40	**20.93**	22.32	23.17	23.94	25.27	27.22	**27.25**	23.94
250.0	1.00	1.30	2.41	4.45	7.24	9.81	**12.98**	14.46	**16.54**	19.66	20.77	**22.30**	23.63	24.41	25.10	26.18	27.01	**25.78**	
	1.05	1.31	2.43	4.49	7.31	9.91	**13.12**	14.61	**16.73**	19.89	21.03	**22.58**	23.95	24.75	25.45	26.57	27.50	**26.34**	
	1.20	1.36	2.54	4.70	7.68	10.45	**13.87**	15.48	**17.75**	21.19	22.43	**24.14**	25.67	26.58	27.39	28.73	30.19	**29.41**	
	1.50	1.39	2.60	4.82	7.88	10.73	**14.27**	15.93	**18.29**	21.87	23.17	**24.97**	26.58	27.54	28.41	29.86	31.61	**31.03**	
	3.00	1.41	2.64	4.90	8.03	10.95	**14.57**	16.27	**18.70**	22.38	23.72	**25.59**	27.26	28.27	29.18	30.72	32.68	**32.25**	
280.0	1.00	1.56	2.92	5.41	8.85	12.04	**15.97**	17.80	**20.38**	24.22	25.59	**27.43**	29.02	29.94	30.72	31.90	32.27	**30.04**	
	1.05	1.57	2.94	5.45	8.92	12.13	**16.10**	17.96	**20.57**	24.46	25.84	**27.72**	29.34	30.27	31.08	32.30	32.77	**30.61**	
	1.20	1.63	3.04	5.66	9.29	12.67	**16.86**	18.82	**21.59**	25.75	27.24	**29.28**	31.06	32.10	33.02	34.45	35.46	**33.67**	
	1.50	1.65	3.10	5.78	9.49	12.96	**17.25**	19.27	**22.13**	26.43	27.98	**30.10**	31.97	33.07	34.04	35.58	36.87	**35.29**	
	3.00	1.68	3.14	5.86	9.64	13.17	**17.55**	19.61	**22.54**	26.95	28.54	**30.72**	32.66	33.80	34.81	36.44	37.95	**36.51**	
315.0	1.00	1.87	3.50	6.52	10.71	14.60	**19.39**	21.62	**24.74**	29.34	30.94	**33.08**	34.87	35.86	36.67	37.75	36.87		
	1.05	1.88	3.52	6.56	10.78	14.70	**19.52**	21.77	**24.93**	29.57	31.20	**33.36**	35.18	36.19	37.03	38.15	37.36		
	1.20	1.93	3.63	6.78	11.15	15.23	**20.28**	22.63	**25.95**	30.86	32.60	**34.92**	36.91	38.02	38.97	40.30	40.05		
	1.50	1.96	3.68	6.89	11.35	15.52	**20.68**	23.09	**26.49**	31.54	33.33	**35.75**	37.81	38.99	39.99	41.44	41.47		
	3.00	1.98	3.73	6.98	11.50	15.73	20.98	23.43	**26.90**	32.06	33.89	**36.37**	38.50	39.72	40.76	42.29	42.54		
355.0	1.00	2.21	4.16	7.78	12.81	17.48	**23.21**	25.87	**29.56**	34.88	36.69	**39.04**	40.91	41.86	42.58	43.25			
	1.05	2.22	4.18	7.82	12.88	17.58	**23.35**	26.02	**29.75**	35.12	36.95	**39.33**	41.22	42.20	42.94	43.64			
	1.20	2.28	4.29	8.04	13.25	18.12	**24.11**	26.89	**30.77**	36.41	38.35	**40.89**	42.94	44.03	44.87	45.79			
	1.50	2.31	4.35	8.15	13.45	18.40	**24.50**	27.34	**31.31**	37.09	39.09	**41.71**	43.85	44.99	45.90	46.93			
	3.00	2.33	4.39	8.24	13.60	18.62	**24.80**	27.68	**31.71**	37.61	39.64	**42.33**	44.54	45.72	46.67	47.78			
400.0	1.00	2.60	4.90	9.19	15.14	20.67	**27.41**	30.50	**34.75**	40.71	42.66	**45.06**	46.80	47.56	47.98	47.74			
	1.05	2.61	4.92	9.22	15.21	20.77	**27.55**	30.66	**34.94**	40.95	42.92	**45.35**	47.12	47.89	48.33	48.13			
	1.20	2.66	5.03	9.44	15.59	21.31	**28.31**	31.52	**35.96**	42.24	44.32	**46.91**	48.84	49.73	50.27	50.28			
	1.50	2.69	5.08	9.55	15.79	21.59	**28.70**	31.97	**36.50**	42.92	45.05	**47.73**	49.75	50.69	51.29	51.42			
	3.00	2.71	5.13	9.64	15.94	21.81	**29.00**	32.32	**36.91**	43.44	45.61	**48.36**	50.43	51.42	52.06	52.27			
450.0	1.00	3.03	5.71	10.73	17.70	24.15	**31.94**	35.46	**40.23**	46.64	48.60	**50.83**	52.12	52.43	52.26				
	1.05	3.04	5.73	10.77	17.77	24.25	**32.08**	35.62	**40.42**	46.88	48.86	**51.11**	52.44	52.76	52.61				
	1.20	3.09	5.84	10.98	18.15	24.79	**32.83**	36.48	**41.44**	48.17	50.26	**52.68**	54.16	54.59	54.55				
	1.50	3.12	5.90	11.10	18.35	25.07	**33.23**	36.93	**41.98**	48.85	51.00	**53.50**	55.07	55.56	55.57				
	3.00	3.14	5.94	11.18	18.50	25.29	**33.53**	37.28	**42.39**	49.36	51.55	**54.12**	55.75	56.29	56.34				
500.0	1.00	3.45	6.52	12.26	20.23	27.56	**36.31**	40.21	**45.37**	51.94	53.76	**55.52**	56.02	55.60					
	1.05	3.46	6.54	12.30	20.30	27.66	**36.45**	40.36	**45.56**	52.17	54.01	**55.80**	56.34	55.94					
	1.20	3.51	6.65	12.52	20.68	28.20	**37.20**	41.23	**46.58**	53.47	55.41	**57.37**	58.06	57.77					
	1.50	3.54	6.70	12.63	20.88	28.48	**37.60**	41.68	**47.12**	54.15	56.15	**58.19**	58.97	58.73					
	3.00	3.56	6.75	12.71	21.03	28.70	**37.90**	42.02	**47.53**	54.66	56.71	**58.81**	59.65	59.46					
560.0	1.00	3.95	7.48	14.08	23.22	31.56	**41.35**	45.60	**51.07**	57.38	58.80	**59.58**							
	1.05	3.96	7.50	14.12	23.29	31.66	**41.49**	45.76	**51.25**	57.62	59.05	**59.87**							
	1.20	4.02	7.61	14.33	23.66	32.19	**42.24**	46.62	**52.28**	58.91	60.45	**61.43**							
	1.50	4.04	7.67	14.45	23.86	32.48	**42.64**	47.07	**52.81**	59.59	61.19	**62.25**							
	3.00	4.07	7.71	14.53	24.01	32.69	**42.94**	47.42	**53.22**	60.10	61.75	**62.88**							
630.0	1.00	4.54	8.59	16.18	26.64	36.08	**46.91**	51.44	**56.99**	62.35	62.94								
	1.05	4.55	8.61	16.22	26.71	36.18	**47.04**	51.60	**57.18**	62.59	63.20								
	1.20	4.60	8.72	16.43	27.08	36.72	**47.80**	52.46	**58.20**	63.88	64.60								
	1.50	4.63	8.78	16.55	27.28	37.00	**48.20**	52.92	**58.74**	64.56	65.33								
	3.00	4.65	8.82	16.63	27.43	37.22	**48.50**	53.26	**59.15**	65.07	65.89								
v_{max}	m/s	40																	

Belt length correction factor c_3

Table 37

L_w	mm	2000	2240	2500	3000	3350	3750	4000	4500	5000	5600	6000	6700	7500	8000	8500	9000	9500	12250
c_3		0.85	0.86	0.88	0.91	0.92	0.94	0.95	0.97	0.98	1.00	1.01	1.03	1.04	1.05	1.06	1.07	1.08	1.12

CONTI MULTIFLEX® 8/–

Power rating P_R

Power rating P_R (kW) for a V-belt as a function of small pulley pitch diameter d_{wk}, transmission ratio i, small pulley speed n_k and pitch length L_w = 579 mm.
Min. pulley diameter $d_{b\,min}$ = 35.5 mm.

CONTI MULTIFLEX® 8/– Table 38

d_{wk} (mm)	i or 1:i	Speed of small pulley n_k (min^{-1})																	
		200	400	**700**	800	**950**	1200	**1450**	1600	2000	2400	**2850**	3200	3600	4000	4500	5000	5500	6000
	1.00	0.03	0.06	**0.09**	0.09	**0.11**	0.13	**0.15**	0.16	0.19	0.22	**0.24**	0.26	0.28	0.30	0.32	0.34	0.36	0.37
	1.05	0.03	0.06	**0.09**	0.10	**0.11**	0.13	**0.15**	0.17	0.20	0.22	**0.25**	0.27	0.30	0.32	0.34	0.36	0.38	0.40
35.5	1.20	0.03	0.06	**0.09**	0.10	**0.12**	0.14	**0.17**	0.18	0.21	0.24	**0.27**	0.30	0.32	0.35	0.37	0.40	0.42	0.44
	1.50	0.03	0.06	**0.10**	0.11	**0.12**	0.15	**0.17**	0.19	0.22	0.26	**0.29**	0.32	0.34	0.37	0.40	0.43	0.45	0.48
	3.00	0.04	0.06	**0.10**	0.11	**0.13**	0.15	**0.18**	0.19	0.23	0.27	**0.30**	0.33	0.36	0.39	0.42	0.45	0.48	0.50
	1.00	0.04	0.07	**0.11**	0.12	**0.14**	0.17	**0.20**	0.21	0.25	0.29	**0.33**	0.35	0.39	0.41	0.45	0.48	0.50	0.53
	1.05	0.04	0.07	**0.11**	0.12	**0.14**	0.17	**0.20**	0.22	0.26	0.30	**0.34**	0.37	0.40	0.43	0.46	0.50	0.52	0.55
40.0	1.20	0.04	0.07	**0.12**	0.13	**0.15**	0.18	**0.21**	0.23	0.27	0.31	**0.36**	0.39	0.43	0.46	0.50	0.53	0.56	0.59
	1.50	0.04	0.08	**0.12**	0.14	**0.16**	0.19	**0.22**	0.24	0.28	0.33	**0.38**	0.41	0.45	0.48	0.52	0.56	0.60	0.63
	3.00	0.04	0.08	**0.12**	0.14	**0.16**	0.19	**0.23**	0.24	0.29	0.34	**0.39**	0.42	0.46	0.50	0.54	0.58	0.62	0.65
	1.00	0.05	0.09	**0.14**	0.15	**0.17**	0.21	**0.25**	0.27	0.32	0.37	**0.42**	0.46	0.50	0.53	0.58	0.62	0.65	0.69
	1.05	0.05	0.09	**0.14**	0.15	**0.18**	0.22	**0.25**	0.27	0.33	0.38	**0.43**	0.47	0.51	0.55	0.60	0.64	0.68	0.71
45.0	1.20	0.05	0.09	**0.14**	0.16	**0.19**	0.22	**0.26**	0.28	0.34	0.39	**0.45**	0.49	0.54	0.58	0.63	0.67	0.72	0.75
	1.50	0.05	0.09	**0.15**	0.17	**0.19**	0.23	**0.27**	0.29	0.35	0.41	**0.47**	0.51	0.56	0.60	0.66	0.70	0.75	0.79
	3.00	0.05	0.09	**0.15**	0.17	**0.19**	0.24	**0.28**	0.30	0.36	0.42	**0.48**	0.52	0.57	0.62	0.67	0.73	0.77	0.81
	1.00	0.06	0.10	**0.16**	0.18	**0.21**	0.25	**0.30**	0.32	0.38	0.44	**0.51**	0.56	0.61	0.65	0.71	0.76	0.80	0.84
	1.05	0.06	0.10	**0.16**	0.18	**0.21**	0.26	**0.30**	0.33	0.39	0.45	**0.52**	0.57	0.62	0.67	0.72	0.77	0.82	0.86
50.0	1.20	0.06	0.11	**0.17**	0.19	**0.22**	0.27	**0.31**	0.34	0.41	0.47	**0.54**	0.59	0.65	0.70	0.76	0.81	0.86	0.90
	1.50	0.06	0.11	**0.17**	0.19	**0.23**	0.27	**0.32**	0.35	0.42	0.49	**0.56**	0.61	0.67	0.72	0.78	0.84	0.89	0.94
	3.00	0.06	0.11	**0.18**	0.20	**0.23**	0.28	**0.33**	0.36	0.43	0.50	**0.57**	0.62	0.68	0.74	0.80	0.86	0.92	0.96
	1.00	0.07	0.12	**0.19**	0.22	**0.25**	0.30	**0.36**	0.39	0.46	0.54	**0.61**	0.67	0.73	0.79	0.85	0.91	0.96	1.01
	1.05	0.07	0.12	**0.20**	0.22	**0.25**	0.31	**0.36**	0.39	0.47	0.55	**0.63**	0.68	0.75	0.80	0.87	0.93	0.98	1.03
56.0	1.20	0.07	0.12	**0.20**	0.22	**0.26**	0.32	**0.37**	0.40	0.49	0.56	**0.65**	0.71	0.77	0.83	0.91	0.97	1.03	1.07
	1.50	0.07	0.13	**0.20**	0.23	**0.27**	0.32	**0.38**	0.41	0.50	0.58	**0.66**	0.73	0.79	0.86	0.93	1.00	1.06	1.11
	3.00	0.07	0.13	**0.21**	0.23	**0.27**	0.33	**0.39**	0.42	0.51	0.59	**0.68**	0.74	0.81	0.87	0.95	1.02	1.08	1.13
	1.00	0.08	0.14	**0.23**	0.26	**0.30**	0.36	**0.42**	0.46	0.55	0.64	**0.74**	0.80	0.88	0.94	1.02	1.09	1.14	1.19
	1.05	0.08	0.14	**0.23**	0.26	**0.30**	0.37	**0.43**	0.47	0.56	0.65	**0.75**	0.82	0.89	0.96	1.04	1.10	1.16	1.21
63.0	1.20	0.08	0.15	**0.24**	0.27	**0.31**	0.38	**0.44**	0.48	0.58	0.67	**0.77**	0.84	0.92	0.99	1.07	1.14	1.20	1.25
	1.50	0.08	0.15	**0.24**	0.27	**0.31**	0.38	**0.45**	0.49	0.59	0.68	**0.78**	0.86	0.94	1.01	1.10	1.17	1.24	1.29
	3.00	0.08	0.15	**0.24**	0.27	**0.32**	0.39	**0.46**	0.49	0.60	0.69	**0.80**	0.87	0.95	1.03	1.11	1.19	1.26	1.32
	1.00	0.09	0.17	**0.27**	0.30	**0.35**	0.43	**0.50**	0.54	0.66	0.76	**0.87**	0.95	1.03	1.11	1.20	1.27	1.33	1.37
	1.05	0.09	0.17	**0.27**	0.30	**0.35**	0.43	**0.51**	0.55	0.66	0.77	**0.88**	0.96	1.05	1.13	1.21	1.29	1.35	1.39
71.0	1.20	0.09	0.17	**0.28**	0.31	**0.36**	0.44	**0.52**	0.56	0.68	0.79	**0.90**	0.98	1.07	1.15	1.25	1.32	1.39	1.44
	1.50	0.09	0.17	**0.28**	0.32	**0.37**	0.45	**0.53**	0.57	0.69	0.80	**0.92**	1.00	1.09	1.18	1.27	1.35	1.42	1.47
	3.00	0.09	0.17	**0.28**	0.32	**0.37**	0.45	**0.53**	0.58	0.70	0.81	**0.93**	1.02	1.11	1.20	1.29	1.37	1.44	1.50
	1.00	0.10	0.19	**0.31**	0.35	**0.41**	0.50	**0.59**	0.64	0.77	0.89	**1.01**	1.11	1.20	1.29	1.38	1.45	1.50	1.54
	1.05	0.11	0.19	**0.32**	0.36	**0.41**	0.50	**0.59**	0.64	0.77	0.90	**1.03**	1.12	1.21	1.30	1.39	1.47	1.53	1.56
80.0	1.20	0.11	0.20	**0.32**	0.36	**0.42**	0.51	**0.60**	0.66	0.79	0.92	**1.05**	1.14	1.24	1.33	1.43	1.51	1.57	1.61
	1.50	0.11	0.20	**0.33**	0.37	**0.42**	0.52	**0.61**	0.66	0.80	0.93	**1.06**	1.16	1.26	1.35	1.45	1.54	1.60	1.64
	3.00	0.11	0.20	**0.33**	0.37	**0.43**	0.52	**0.62**	0.67	0.81	0.94	**1.08**	1.17	1.28	1.37	1.47	1.56	1.62	1.67
	1.00	0.12	0.22	**0.36**	0.41	**0.47**	0.58	**0.68**	0.74	0.89	1.03	**1.17**	1.27	1.38	1.47	1.56	1.63	1.67	1.68
	1.05	0.12	0.22	**0.37**	0.41	**0.48**	0.58	**0.69**	0.74	0.90	1.04	**1.18**	1.28	1.39	1.48	1.57	1.64	1.69	1.70
90.0	1.20	0.12	0.23	**0.37**	0.42	**0.48**	0.59	**0.70**	0.76	0.91	1.05	**1.20**	1.31	1.42	1.51	1.61	1.68	1.73	1.74
	1.50	0.12	0.23	**0.37**	0.42	**0.49**	0.60	**0.70**	0.77	0.92	1.07	**1.22**	1.33	1.44	1.53	1.63	1.71	1.76	1.78
	3.00	0.12	0.23	**0.38**	0.42	**0.49**	0.60	**0.71**	0.77	0.93	1.08	**1.23**	1.34	1.45	1.55	1.65	1.73	1.78	1.81
	1.00	0.14	0.25	**0.41**	0.46	**0.54**	0.66	**0.77**	0.84	1.01	1.16	**1.32**	1.43	1.54	1.63	1.71	1.77	1.78	1.76
	1.05	0.14	0.25	**0.41**	0.47	**0.54**	0.66	**0.78**	0.84	1.01	1.17	**1.33**	1.44	1.55	1.64	1.73	1.79	1.80	1.78
100.0	1.20	0.14	0.26	**0.42**	0.47	**0.55**	0.67	**0.79**	0.86	1.03	1.19	**1.35**	1.46	1.58	1.67	1.76	1.82	1.85	1.83
	1.50	0.14	0.26	**0.42**	0.48	**0.55**	0.68	**0.80**	0.86	1.04	1.20	**1.37**	1.48	1.60	1.70	1.79	1.85	1.88	1.86
	3.00	0.14	0.26	**0.43**	0.48	**0.56**	0.68	**0.80**	0.87	1.05	1.21	**1.38**	1.50	1.61	1.71	1.81	1.87	1.90	1.89
v_{max}	m/s																		30

Belt length correction factor c_3 Table 39

L_w	mm	549	579	619	649	699	719	729	769	779	819	849	869	894	919	969	1019	1219	1269
c_3		0.99	1.00	1.01	1.02	1.04	1.05	1.05	1.06	1.06	1.08	1.08	1.09	1.10	1.10	1.11	1.13	1.17	1.18

CONTI MULTIFLEX® 10/Z

Power rating P_R

Power rating P_R (kW) for a V-belt as a function of small pulley pitch diameter d_{wk}, transmission ratio i, small pulley speed n_k and pitch length L_w = 822 mm.
Min. pulley diameter $d_{b\,min}$ = 45 mm.

CONTI MULTIFLEX® 10/Z

Table 40

d_{wk} (mm)	i or 1:i	Speed of small pulley n_k (min^{-1})																		
		200	400	**700**	800	**950**	1200	**1450**	1600	2000	2400	**2850**	3200	3600	4000	4500	5000	5500	6000
45.0	1.00	0.06	0.10	**0.16**	0.17	**0.19**	0.23	**0.26**	0.28	0.32	0.36	**0.40**	0.43	0.46	0.48	0.50	0.52	0.52	0.53
	1.05	0.06	0.11	**0.16**	0.18	**0.20**	0.24	**0.28**	0.29	0.34	0.39	**0.43**	0.46	0.49	0.51	0.54	0.56	0.57	0.58
	1.20	0.07	0.11	**0.17**	0.19	**0.22**	0.26	**0.30**	0.32	0.38	0.43	**0.48**	0.52	0.55	0.59	0.62	0.65	0.67	0.69
	1.50	0.07	0.12	**0.18**	0.20	**0.23**	0.28	**0.32**	0.35	0.41	0.46	**0.52**	0.56	0.60	0.64	0.68	0.72	0.75	0.77
	3.00	0.07	0.12	**0.19**	0.21	**0.24**	0.29	**0.34**	0.36	0.43	0.49	**0.55**	0.59	0.64	0.68	0.73	0.77	0.80	0.83
50.0	1.00	0.07	0.13	**0.20**	0.22	**0.25**	0.30	**0.35**	0.38	0.44	0.50	**0.56**	0.60	0.65	0.69	0.73	0.76	0.78	0.80
	1.05	0.08	0.13	**0.21**	0.23	**0.26**	0.31	**0.36**	0.39	0.46	0.52	**0.59**	0.63	0.68	0.72	0.77	0.80	0.83	0.85
	1.20	0.08	0.14	**0.22**	0.24	**0.28**	0.34	**0.39**	0.42	0.49	0.56	**0.64**	0.69	0.74	0.79	0.85	0.89	0.93	0.96
	1.50	0.08	0.15	**0.23**	0.26	**0.29**	0.35	**0.41**	0.44	0.52	0.60	**0.68**	0.73	0.79	0.85	0.91	0.96	1.01	1.04
	3.00	0.08	0.15	**0.24**	0.26	**0.30**	0.36	**0.42**	0.46	0.54	0.62	**0.71**	0.77	0.83	0.89	0.95	1.01	1.06	1.10
56.0	1.00	0.09	0.16	**0.25**	0.28	**0.33**	0.39	**0.45**	0.49	0.58	0.66	**0.75**	0.81	0.87	0.93	0.99	1.04	1.08	1.10
	1.05	0.09	0.17	**0.26**	0.29	**0.33**	0.40	**0.47**	0.50	0.60	0.68	**0.77**	0.84	0.90	0.96	1.03	1.08	1.13	1.16
	1.20	0.10	0.17	**0.27**	0.31	**0.35**	0.42	**0.49**	0.53	0.63	0.73	**0.82**	0.89	0.97	1.03	1.11	1.17	1.22	1.26
	1.50	0.10	0.18	**0.28**	0.32	**0.36**	0.44	**0.51**	0.55	0.66	0.76	**0.86**	0.94	1.02	1.09	1.17	1.24	1.30	1.35
	3.00	0.10	0.18	**0.29**	0.32	**0.37**	0.45	**0.53**	0.57	0.68	0.78	**0.89**	0.97	1.05	1.13	1.22	1.29	1.36	1.41
63.0	1.00	0.11	0.20	**0.32**	0.35	**0.41**	0.49	**0.57**	0.62	0.74	0.84	**0.96**	1.04	1.12	1.20	1.28	1.35	1.40	1.44
	1.05	0.11	0.20	**0.32**	0.36	**0.42**	0.50	**0.59**	0.63	0.75	0.87	**0.98**	1.07	1.16	1.23	1.32	1.39	1.45	1.49
	1.20	0.12	0.21	**0.34**	0.37	**0.43**	0.52	**0.61**	0.66	0.79	0.91	**1.03**	1.12	1.22	1.31	1.40	1.48	1.55	1.60
	1.50	0.12	0.22	**0.35**	0.39	**0.45**	0.54	**0.63**	0.68	0.82	0.94	**1.07**	1.17	1.27	1.36	1.46	1.55	1.62	1.68
	3.00	0.12	0.22	**0.35**	0.39	**0.46**	0.55	**0.65**	0.70	0.84	0.97	**1.10**	1.20	1.31	1.40	1.51	1.60	1.68	1.74
71.0	1.00	0.13	0.24	**0.39**	0.43	**0.50**	0.61	**0.71**	0.76	0.91	1.05	**1.19**	1.29	1.40	1.50	1.60	1.68	1.74	1.78
	1.05	0.14	0.25	**0.39**	0.44	**0.51**	0.62	**0.72**	0.78	0.93	1.07	**1.22**	1.32	1.43	1.53	1.64	1.72	1.79	1.83
	1.20	0.14	0.25	**0.41**	0.45	**0.52**	0.64	**0.75**	0.81	0.97	1.11	**1.27**	1.38	1.50	1.60	1.72	1.81	1.89	1.94
	1.50	0.14	0.26	**0.42**	0.47	**0.54**	0.65	**0.77**	0.83	0.99	1.15	**1.31**	1.43	1.55	1.66	1.78	1.88	1.96	2.02
	3.00	0.14	0.26	**0.42**	0.47	**0.55**	0.67	**0.78**	0.85	1.01	1.17	**1.34**	1.46	1.58	1.70	1.83	1.93	2.02	2.08
80.0	1.00	0.16	0.29	**0.46**	0.52	**0.60**	0.73	**0.85**	0.93	1.11	1.28	**1.45**	1.57	1.70	1.81	1.93	2.02	2.08	2.10
	1.05	0.16	0.29	**0.47**	0.53	**0.61**	0.74	**0.87**	0.94	1.13	1.30	**1.48**	1.60	1.73	1.85	1.97	2.06	2.13	2.16
	1.20	0.16	0.30	**0.48**	0.54	**0.63**	0.76	**0.89**	0.97	1.16	1.34	**1.53**	1.66	1.80	1.92	2.05	2.15	2.22	2.26
	1.50	0.17	0.30	**0.49**	0.55	**0.64**	0.78	**0.91**	0.99	1.19	1.37	**1.57**	1.70	1.85	1.97	2.11	2.22	2.30	2.35
	3.00	0.17	0.31	**0.50**	0.56	**0.65**	0.79	**0.93**	1.01	1.21	1.40	**1.59**	1.74	1.88	2.01	2.16	2.27	2.36	2.41
90.0	1.00	0.19	0.34	**0.55**	0.62	**0.71**	0.87	**1.02**	1.10	1.32	1.52	**1.72**	1.87	2.01	2.14	2.26	2.35	2.39	2.40
	1.05	0.19	0.34	**0.56**	0.62	**0.72**	0.88	**1.03**	1.12	1.34	1.54	**1.75**	1.90	2.05	2.17	2.30	2.39	2.44	2.45
	1.20	0.19	0.35	**0.57**	0.64	**0.74**	0.90	**1.06**	1.15	1.37	1.58	**1.80**	1.95	2.11	2.25	2.38	2.48	2.54	2.56
	1.50	0.19	0.36	**0.58**	0.65	**0.75**	0.92	**1.08**	1.17	1.40	1.62	**1.84**	2.00	2.16	2.30	2.45	2.55	2.62	2.64
	3.00	0.20	0.36	**0.59**	0.66	**0.76**	0.93	**1.09**	1.18	1.42	1.64	**1.87**	2.03	2.20	2.34	2.49	2.60	2.67	2.70
100.0	1.00	0.21	0.39	**0.63**	0.71	**0.82**	1.01	**1.18**	1.28	1.53	1.76	**1.99**	2.15	2.31	2.44	2.56	2.63	2.65	2.60
	1.05	0.22	0.39	**0.64**	0.72	**0.83**	1.02	**1.19**	1.29	1.54	1.78	**2.01**	2.18	2.34	2.47	2.60	2.68	2.70	2.66
	1.20	0.22	0.40	**0.65**	0.73	**0.85**	1.04	**1.22**	1.32	1.58	1.82	**2.06**	2.23	2.40	2.54	2.68	2.76	2.79	2.76
	1.50	0.22	0.41	**0.66**	0.74	**0.86**	1.05	**1.24**	1.34	1.61	1.85	**2.10**	2.28	2.45	2.60	2.74	2.84	2.87	2.85
	3.00	0.22	0.41	**0.67**	0.75	**0.87**	1.07	**1.25**	1.36	1.63	1.88	**2.13**	2.31	2.49	2.64	2.79	2.88	2.93	2.91
112.0	1.00	0.25	0.45	**0.74**	0.82	**0.96**	1.17	**1.37**	1.48	1.77	2.03	**2.29**	2.46	2.63	2.76	2.86	2.90	2.85	
	1.05	0.25	0.46	**0.74**	0.83	**0.96**	1.18	**1.38**	1.49	1.79	2.05	**2.31**	2.49	2.66	2.79	2.90	2.94	2.90	
	1.20	0.25	0.46	**0.75**	0.85	**0.98**	1.20	**1.40**	1.52	1.82	2.09	**2.36**	2.55	2.72	2.86	2.98	3.03	3.00	
	1.50	0.25	0.47	**0.76**	0.86	**0.99**	1.21	**1.42**	1.55	1.85	2.13	**2.40**	2.59	2.78	2.92	3.05	3.10	3.08	
	3.00	0.26	0.47	**0.77**	0.87	**1.00**	1.23	**1.44**	1.56	1.87	2.15	**2.43**	2.62	2.81	2.96	3.09	3.15	3.13	
125.0	1.00	0.28	0.52	**0.84**	0.95	**1.10**	1.34	**1.56**	1.70	2.02	2.31	**2.59**	2.77	2.94	3.05	3.12	3.08		
	1.05	0.28	0.52	**0.85**	0.95	**1.10**	1.35	**1.58**	1.71	2.04	2.33	**2.62**	2.80	2.97	3.09	3.16	3.13		
	1.20	0.29	0.53	**0.86**	0.97	**1.12**	1.37	**1.60**	1.74	2.07	2.38	**2.67**	2.86	3.03	3.16	3.24	3.22		
	1.50	0.29	0.53	**0.87**	0.98	**1.13**	1.39	**1.62**	1.76	2.10	2.41	**2.71**	2.90	3.09	3.21	3.30	3.29		
	3.00	0.29	0.54	**0.88**	0.99	**1.14**	1.40	**1.64**	1.78	2.12	2.43	**2.74**	2.94	3.12	3.25	3.34	3.34		
v_{max}	m/s															30			

Belt length correction factor c_3

Table 41

L_w	mm	472	522	582	622	692	772	822	922	1022	1082	1142	1204	1272	1342	1422	1622	1822	2022
c_3		0.88	0.90	0.93	0.94	0.96	0.99	1.00	1.02	1.05	1.06	1.07	1.08	1.10	1.11	1.12	1.15	1.18	1.20

CONTI MULTIFLEX® 13/A

Power rating P_R

Power rating P_R (kW) for a V-belt as a function of small pulley pitch diameter d_{wk}, transmission ratio i, small pulley speed n_k and pitch length L_w = 1730 mm.
Min. pulley diameter $d_{b\,min}$ = 71 mm.

CONTI MULTIFLEX® 13/A

Table 42

d_{wk} (mm)	i or 1:i	Speed of small pulley n_k (min^{-1})																	
		100	200	350	500	**700**	800	**950**	1200	**1450**	1600	1800	2000	2500	**2850**	3500	4000	5000	6000
71.0	1.00	0.12	0.21	0.32	0.41	**0.52**	0.57	**0.63**	0.73	**0.81**	0.85	0.90	0.94	1.01	**1.04**	1.03	0.98	0.74	0.31
	1.05	0.13	0.22	0.33	0.43	**0.55**	0.60	**0.67**	0.78	**0.87**	0.92	0.98	1.03	1.12	**1.16**	1.18	1.15	0.95	0.56
	1.20	0.13	0.24	0.36	0.48	**0.61**	0.67	**0.75**	0.88	**0.99**	1.05	1.12	1.19	1.32	**1.39**	1.47	1.48	1.36	1.05
	1.50	0.14	0.25	0.39	0.51	**0.65**	0.72	**0.81**	0.96	**1.08**	1.15	1.24	1.32	1.49	**1.58**	1.70	1.74	1.69	1.44
	3.00	0.15	0.26	0.40	0.53	**0.69**	0.76	**0.86**	1.01	**1.15**	1.23	1.32	1.41	1.60	**1.71**	1.86	1.92	1.92	1.72
80.0	1.00	0.16	0.28	0.44	0.57	**0.74**	0.81	**0.92**	1.08	**1.22**	1.30	1.39	1.48	1.66	**1.75**	1.85	1.87	1.73	1.32
	1.05	0.16	0.29	0.45	0.59	**0.77**	0.84	**0.96**	1.13	**1.28**	1.36	1.47	1.56	1.76	**1.87**	2.00	2.04	1.94	1.57
	1.20	0.17	0.30	0.48	0.64	**0.82**	0.91	**1.03**	1.23	**1.40**	1.50	1.62	1.73	1.97	**2.10**	2.29	2.37	2.35	2.07
	1.50	0.18	0.32	0.50	0.67	**0.87**	0.96	**1.10**	1.30	**1.49**	1.60	1.73	1.86	2.13	**2.29**	2.52	2.63	2.67	2.46
	3.00	0.18	0.33	0.52	0.69	**0.90**	1.00	**1.14**	1.36	**1.56**	1.67	1.82	1.95	2.25	**2.42**	2.68	2.81	2.90	2.74
90.0	1.00	0.20	0.36	0.56	0.75	**0.97**	1.08	**1.23**	1.46	**1.67**	1.78	1.93	2.06	2.35	**2.51**	2.73	2.80	2.73	2.30
	1.05	0.20	0.36	0.58	0.77	**1.00**	1.11	**1.27**	1.51	**1.73**	1.85	2.00	2.15	2.46	**2.63**	2.87	2.97	2.94	2.55
	1.20	0.21	0.38	0.61	0.81	**1.06**	1.18	**1.35**	1.61	**1.85**	1.98	2.15	2.31	2.66	**2.87**	3.16	3.30	3.35	3.04
	1.50	0.22	0.39	0.63	0.84	**1.11**	1.23	**1.41**	1.68	**1.94**	2.09	2.27	2.44	2.83	**3.05**	3.39	3.56	3.67	3.43
	3.00	0.22	0.40	0.65	0.87	**1.14**	1.27	**1.45**	1.74	**2.01**	2.16	2.35	2.53	2.94	**3.19**	3.55	3.75	3.91	3.71
100.0	1.00	0.24	0.43	0.69	0.92	**1.21**	1.34	**1.53**	1.83	**2.11**	2.26	2.45	2.63	3.03	**3.25**	3.55	3.68	3.62	3.09
	1.05	0.24	0.44	0.70	0.94	**1.24**	1.37	**1.57**	1.88	**2.17**	2.33	2.53	2.72	3.13	**3.37**	3.70	3.85	3.83	3.35
	1.20	0.25	0.46	0.73	0.98	**1.29**	1.44	**1.65**	1.98	**2.29**	2.46	2.68	2.88	3.34	**3.60**	3.99	4.18	4.24	3.84
	1.50	0.26	0.47	0.75	1.02	**1.34**	1.49	**1.71**	2.06	**2.38**	2.56	2.79	3.01	3.50	**3.79**	4.22	4.44	4.57	4.23
	3.00	0.26	0.48	0.77	1.04	**1.37**	1.53	**1.76**	2.11	**2.45**	2.64	2.88	3.10	3.62	**3.92**	4.38	4.62	4.80	4.51
112.0	1.00	0.29	0.52	0.84	1.13	**1.48**	1.65	**1.89**	2.27	**2.62**	2.82	3.07	3.30	3.81	**4.10**	4.49	4.64	4.54	
	1.05	0.29	0.53	0.85	1.15	**1.51**	1.69	**1.93**	2.32	**2.68**	2.89	3.14	3.38	3.91	**4.22**	4.63	4.81	4.75	
	1.20	0.30	0.55	0.88	1.19	**1.57**	1.75	**2.01**	2.42	**2.80**	3.02	3.29	3.55	4.12	**4.45**	4.92	5.14	5.16	
	1.50	0.31	0.56	0.90	1.22	**1.62**	1.80	**2.07**	2.50	**2.90**	3.12	3.41	3.68	4.28	**4.64**	5.15	5.40	5.48	
	3.00	0.31	0.57	0.92	1.24	**1.65**	1.84	**2.12**	2.56	**2.97**	3.20	3.49	3.77	4.40	**4.77**	5.31	5.58	5.71	
125.0	1.00	0.34	0.62	1.00	1.35	**1.78**	1.99	**2.28**	2.74	**3.17**	3.41	3.72	4.00	4.62	**4.97**	5.42	5.57	5.32	
	1.05	0.34	0.63	1.01	1.37	**1.81**	2.02	**2.32**	2.79	**3.23**	3.48	3.79	4.09	4.72	**5.09**	5.56	5.74	5.53	
	1.20	0.35	0.64	1.04	1.41	**1.87**	2.08	**2.40**	2.89	**3.35**	3.61	3.94	4.25	4.93	**5.32**	5.85	6.07	5.94	
	1.50	0.36	0.66	1.06	1.44	**1.91**	2.14	**2.46**	2.97	**3.45**	3.72	4.06	4.38	5.09	**5.51**	6.08	6.33	6.27	
	3.00	0.36	0.67	1.08	1.46	**1.94**	2.17	**2.50**	3.03	**3.51**	3.79	4.14	4.47	5.21	**5.64**	6.24	6.52	6.50	
140.0	1.00	0.40	0.73	1.18	1.60	**2.12**	2.36	**2.72**	3.28	**3.79**	4.08	4.45	4.78	5.51	**5.90**	6.38	6.49		
	1.05	0.40	0.74	1.19	1.62	**2.15**	2.40	**2.76**	3.33	**3.85**	4.15	4.52	4.87	5.61	**6.02**	6.53	6.66		
	1.20	0.41	0.75	1.22	1.66	**2.20**	2.46	**2.84**	3.43	**3.97**	4.28	4.67	5.03	5.82	**6.26**	6.81	6.99		
	1.50	0.42	0.77	1.25	1.69	**2.25**	2.52	**2.90**	3.50	**4.07**	4.39	4.79	5.16	5.98	**6.44**	7.04	7.25		
	3.00	0.42	0.78	1.26	1.72	**2.28**	2.55	**2.94**	3.56	**4.13**	4.46	4.87	5.25	6.10	**6.58**	7.20	7.43		
160.0	1.00	0.48	0.87	1.42	1.93	**2.56**	2.86	**3.29**	3.97	**4.59**	4.94	5.38	5.78	6.61	**7.04**	7.47	7.42		
	1.05	0.48	0.88	1.43	1.95	**2.59**	2.89	**3.33**	4.02	**4.65**	5.01	5.45	5.86	6.71	**7.16**	7.61	7.59		
	1.20	0.49	0.90	1.46	1.99	**2.65**	2.96	**3.41**	4.12	**4.77**	5.14	5.60	6.02	6.92	**7.39**	7.90	7.92		
	1.50	0.49	0.91	1.49	2.02	**2.69**	3.01	**3.47**	4.20	**4.87**	5.25	5.72	6.16	7.08	**7.58**	8.13	8.18		
	3.00	0.50	0.92	1.50	2.04	**2.72**	3.05	**3.52**	4.25	**4.93**	5.32	5.80	6.25	7.20	**7.71**	8.29	8.37		
180.0	1.00	0.55	1.02	1.66	2.25	**2.99**	3.35	**3.85**	4.64	**5.37**	5.77	6.26	6.71	7.61	**8.03**	8.30			
	1.05	0.56	1.03	1.67	2.27	**3.02**	3.38	**3.89**	4.69	**5.43**	5.83	6.34	6.79	7.71	**8.15**	8.45			
	1.20	0.56	1.04	1.70	2.31	**3.08**	3.44	**3.97**	4.79	**5.55**	5.97	6.49	6.96	7.92	**8.39**	8.74			
	1.50	0.57	1.05	1.72	2.35	**3.13**	3.50	**4.03**	4.87	**5.64**	6.07	6.60	7.09	8.08	**8.57**	8.97			
	3.00	0.58	1.06	1.74	2.37	**3.16**	3.53	**4.08**	4.93	**5.71**	6.14	6.69	7.18	8.20	**8.70**	9.13			
200.0	1.00	0.63	1.16	1.89	2.57	**3.42**	3.82	**4.40**	5.30	**6.11**	6.56	7.10	7.58	8.50	**8.87**				
	1.05	0.63	1.17	1.90	2.59	**3.45**	3.86	**4.44**	5.35	**6.17**	6.62	7.18	7.67	8.61	**8.99**				
	1.20	0.64	1.18	1.93	2.63	**3.51**	3.92	**4.52**	5.45	**6.29**	6.76	7.33	7.83	8.81	**9.22**				
	1.50	0.65	1.20	1.96	2.67	**3.55**	3.97	**4.58**	5.52	**6.39**	6.86	7.44	7.96	8.98	**9.41**				
	3.00	0.65	1.21	1.97	2.69	**3.58**	4.01	**4.62**	5.58	**6.45**	6.93	7.53	8.06	9.09	**9.54**				
v_{max}	m/s	30																	

Belt length correction factor c_3

Table 43

L_w	mm	590	660	740	830	930	1030	1150	1280	1430	1730	1830	2030	2270	2530	3030	3380	4030	5030
c_3		0.78	0.80	0.82	0.85	0.87	0.89	0.91	0.94	0.96	1.00	1.01	1.03	1.06	1.08	1.12	1.15	1.19	1.24

CONTI MULTIFLEX® 17/B

Power rating P_R

Power rating P_R (kW) for a V-belt as a function of small pulley pitch diameter d_{wk}, transmission ratio i, small pulley speed n_k and pitch length L_w = 2283 mm.
Min. pulley diameter $d_{b\,min}$ = 112 mm.

CONTI MULTIFLEX® 17/B

Table 44

d_{wk} (mm)	i or 1:i	Speed of small pulley n_k (min^{-1})																	
		50	100	200	350	500	**700**	800	**950**	1100	1200	**1450**	1600	1800	2000	2500	**2850**	3500	4000
	1.00	0.19	0.33	0.58	0.89	1.16	**1.48**	1.63	**1.83**	2.01	2.12	**2.37**	2.50	2.65	2.77	2.96	**2.99**	2.80	2.42
	1.05	0.19	0.34	0.59	0.92	1.21	**1.55**	1.70	**1.92**	2.11	2.23	**2.51**	2.65	2.82	2.96	3.20	**3.26**	3.13	2.80
112.0	1.20	0.20	0.36	0.63	0.99	1.30	**1.68**	1.85	**2.09**	2.32	2.45	**2.77**	2.94	3.15	3.33	3.65	**3.78**	3.77	3.53
	1.50	0.21	0.37	0.66	1.04	1.37	**1.78**	1.97	**2.23**	2.48	2.63	**2.98**	3.18	3.41	3.62	4.02	**4.20**	4.28	4.11
	3.00	0.21	0.38	0.68	1.07	1.43	**1.85**	2.05	**2.33**	2.59	2.75	**3.13**	3.34	3.60	3.82	4.28	**4.49**	4.64	4.53
	1.00	0.23	0.41	0.73	1.14	1.51	**1.95**	2.16	**2.44**	2.71	2.87	**3.25**	3.45	3.69	3.89	4.26	**4.38**	4.28	3.90
	1.05	0.23	0.42	0.75	1.18	1.56	**2.02**	2.23	**2.53**	2.81	2.99	**3.39**	3.60	3.86	4.08	4.49	**4.64**	4.61	4.27
125.0	1.20	0.24	0.44	0.78	1.24	1.65	**2.15**	2.38	**2.71**	3.01	3.21	**3.65**	3.89	4.19	4.45	4.95	**5.17**	5.25	5.01
	1.50	0.25	0.45	0.81	1.29	1.72	**2.25**	2.50	**2.85**	3.17	3.38	**3.86**	4.13	4.45	4.74	5.31	**5.58**	5.76	5.59
	3.00	0.25	0.46	0.83	1.33	1.78	**2.32**	2.58	**2.94**	3.29	3.51	**4.01**	4.29	4.64	4.95	5.57	**5.88**	6.12	6.00
	1.00	0.28	0.50	0.90	1.43	1.91	**2.49**	2.76	**3.14**	3.50	3.72	**4.24**	4.52	4.85	5.14	5.67	**5.87**	5.81	5.34
	1.05	0.28	0.51	0.92	1.47	1.96	**2.56**	2.84	**3.23**	3.60	3.84	**4.37**	4.67	5.02	5.33	5.91	**6.14**	6.14	5.72
140.0	1.20	0.29	0.53	0.96	1.53	2.05	**2.69**	2.98	**3.41**	3.81	4.06	**4.64**	4.96	5.35	5.70	6.37	**6.66**	6.78	6.45
	1.50	0.30	0.55	0.99	1.58	2.12	**2.79**	3.10	**3.55**	3.97	4.23	**4.85**	5.19	5.61	5.99	6.73	**7.08**	7.29	7.03
	3.00	0.30	0.56	1.01	1.62	2.18	**2.86**	3.18	**3.64**	4.08	4.36	**5.00**	5.36	5.80	6.19	6.99	**7.37**	7.65	7.45
	1.00	0.34	0.63	1.13	1.82	2.44	**3.20**	3.55	**4.06**	4.53	4.83	**5.52**	5.89	6.34	6.73	7.43	**7.68**	7.52	6.80
	1.05	0.35	0.64	1.15	1.85	2.48	**3.26**	3.63	**4.15**	4.64	4.94	**5.65**	6.04	6.51	6.91	7.66	**7.94**	7.85	7.18
160.0	1.20	0.36	0.65	1.19	1.91	2.58	**3.39**	3.78	**4.32**	4.84	5.16	**5.92**	6.33	6.84	7.28	8.12	**8.47**	8.49	7.91
	1.50	0.36	0.67	1.22	1.96	2.65	**3.49**	3.89	**4.46**	5.00	5.34	**6.13**	6.57	7.10	7.57	8.49	**8.88**	9.00	8.49
	3.00	0.37	0.68	1.24	2.00	2.70	**3.57**	3.97	**4.56**	5.11	5.46	**6.28**	6.73	7.28	7.78	8.75	**9.18**	9.36	8.91
	1.00	0.41	0.75	1.36	2.19	2.96	**3.89**	4.33	**4.95**	5.54	5.91	**6.75**	7.21	7.75	8.22	9.02	**9.25**	8.83	
	1.05	0.41	0.76	1.38	2.23	3.00	**3.96**	4.41	**5.04**	5.64	6.02	**6.89**	7.36	7.92	8.41	9.26	**9.52**	9.16	
180.0	1.20	0.42	0.78	1.42	2.29	3.09	**4.09**	4.55	**5.22**	5.84	6.24	**7.16**	7.65	8.25	8.77	9.72	**10.04**	9.80	
	1.50	0.43	0.79	1.45	2.34	3.17	**4.19**	4.67	**5.36**	6.00	6.42	**7.37**	7.89	8.51	9.06	10.08	**10.45**	10.31	
	3.00	0.43	0.80	1.47	2.38	3.22	**4.26**	4.75	**5.45**	6.12	6.54	**7.52**	8.05	8.70	9.27	10.34	**10.75**	10.67	
	1.00	0.47	0.87	1.59	2.57	3.47	**4.57**	5.09	**5.83**	6.52	6.95	**7.94**	8.47	9.09	9.61	10.44	**10.57**		
	1.05	0.48	0.88	1.61	2.60	3.51	**4.64**	5.17	**5.92**	6.62	7.07	**8.08**	8.62	9.26	9.80	10.67	**10.84**		
200.0	1.20	0.48	0.90	1.64	2.66	3.60	**4.77**	5.31	**6.09**	6.83	7.29	**8.35**	8.91	9.59	10.17	11.13	**11.36**		
	1.50	0.49	0.91	1.67	2.71	3.68	**4.87**	5.43	**6.23**	6.99	7.46	**8.56**	9.15	9.85	10.46	11.49	**11.77**		
	3.00	0.50	0.92	1.69	2.75	3.73	**4.94**	5.51	**6.33**	7.10	7.59	**8.71**	9.31	10.04	10.66	11.75	**12.07**		
	1.00	0.55	1.01	1.86	3.01	4.07	**5.38**	5.99	**6.86**	7.66	8.17	**9.31**	9.90	10.59	11.14	11.88	**11.79**		
	1.05	0.55	1.02	1.87	3.04	4.12	**5.44**	6.06	**6.95**	7.77	8.28	**9.44**	10.05	10.76	11.33	12.12	**12.06**		
224.0	1.20	0.56	1.04	1.91	3.11	4.21	**5.57**	6.21	**7.12**	7.97	8.50	**9.71**	10.35	11.09	11.70	12.58	**12.58**		
	1.50	0.57	1.05	1.94	3.16	4.28	**5.67**	6.33	**7.26**	8.13	8.68	**9.92**	10.58	11.35	11.99	12.94	**13.00**		
	3.00	0.57	1.06	1.96	3.19	4.33	**5.75**	6.41	**7.36**	8.24	8.80	**10.07**	10.75	11.54	12.19	13.20	**13.29**		
	1.00	0.63	1.16	2.14	3.48	4.71	**6.23**	6.94	**7.94**	8.86	9.43	**10.71**	11.35	12.07	12.62	13.11			
	1.05	0.63	1.17	2.16	3.51	4.76	**6.30**	7.01	**8.03**	8.96	9.55	**10.84**	11.50	12.24	12.80	13.34			
250.0	1.20	0.64	1.19	2.20	3.58	4.85	**6.42**	7.16	**8.20**	9.17	9.77	**11.11**	11.80	12.57	13.17	13.80			
	1.50	0.65	1.21	2.23	3.63	4.93	**6.53**	7.28	**8.34**	9.33	9.94	**11.32**	12.03	12.84	13.46	14.17			
	3.00	0.65	1.22	2.25	3.67	4.98	**6.60**	7.36	**8.44**	9.44	10.06	**11.47**	12.20	13.02	13.67	14.43			
	1.00	0.72	1.34	2.47	4.02	5.45	**7.19**	8.00	**9.14**	10.18	10.82	**12.21**	12.89	13.59	14.06				
	1.05	0.73	1.35	2.49	4.05	5.49	**7.26**	8.08	**9.23**	10.29	10.93	**12.34**	13.04	13.76	14.25				
280.0	1.20	0.74	1.37	2.53	4.12	5.58	**7.39**	8.23	**9.41**	10.49	11.16	**12.61**	13.33	14.09	14.62				
	1.50	0.74	1.38	2.56	4.17	5.66	**7.49**	8.34	**9.54**	10.65	11.33	**12.82**	13.56	14.36	14.91				
	3.00	0.75	1.39	2.58	4.20	5.71	**7.56**	8.42	**9.64**	10.76	11.45	**12.97**	13.73	14.54	15.11				
	1.00	0.83	1.54	2.85	4.64	6.28	**8.29**	9.21	**10.49**	11.65	12.34	**13.80**	14.47	15.08	15.37				
	1.05	0.83	1.55	2.87	4.67	6.33	**8.35**	9.28	**10.58**	11.75	12.46	**13.94**	14.62	15.25	15.56				
315.0	1.20	0.84	1.57	2.90	4.73	6.42	**8.48**	9.43	**10.76**	11.95	12.68	**14.20**	14.91	15.58	15.92				
	1.50	0.85	1.58	2.93	4.78	6.49	**8.58**	9.55	**10.89**	12.11	12.85	**14.42**	15.14	15.85	16.21				
	3.00	0.86	1.59	2.95	4.82	6.55	**8.65**	9.63	**10.99**	12.23	12.98	**14.56**	15.31	16.03	16.42				
v_{max}	m/s	30																	

Belt length correction factor c_3

Table 45

L_w	mm	658	793	918	1018	1093	1218	1343	1493	1643	1843	2043	2283	2543	2843	3293	4043	5043	7143
c_3		0.75	0.78	0.81	0.83	0.85	0.87	0.89	0.91	0.93	0.95	0.98	1.00	1.02	1.05	1.08	1.13	1.18	1.26

CONTI MULTIFLEX® 20/–

Power rating P_R

Power rating P_R (kW) for a V-belt as a function of small pulley pitch diameter d_{wk}, transmission ratio i, small pulley speed n_k and pitch length L_w = 3198 mm.
Min. pulley diameter $d_{b\,min}$ = 140 mm.

CONTI MULTIFLEX® 20/– Table 46

d_{wk} (mm)	i or 1:i	Speed of small pulley n_k (min^{-1})																	
		50	100	200	350	400	500	**700**	800	**950**	1100	1200	**1450**	1600	1800	2000	2400	**2850**	3500
	1.00	0.25	0.45	0.78	1.21	1.34	1.59	**2.05**	2.26	**2.55**	2.82	2.98	**3.35**	3.54	3.75	3.92	4.11	**4.08**	3.50
	1.05	0.26	0.46	0.80	1.25	1.38	1.64	**2.12**	2.34	**2.65**	2.93	3.11	**3.50**	3.70	3.94	4.13	4.36	**4.38**	3.87
140.0	1.20	0.27	0.48	0.84	1.32	1.47	1.75	**2.26**	2.50	**2.84**	3.16	3.35	**3.80**	4.03	4.31	4.54	4.86	**4.96**	4.58
	1.50	0.28	0.49	0.87	1.38	1.53	1.83	**2.38**	2.63	**3.00**	3.34	3.55	**4.03**	4.29	4.60	4.86	5.25	**5.43**	5.15
	3.00	0.28	0.50	0.90	1.42	1.58	1.89	**2.46**	2.73	**3.11**	3.46	3.69	**4.20**	4.48	4.81	5.09	5.52	**5.75**	5.56
	1.00	0.32	0.57	1.00	1.58	1.76	2.11	**2.74**	3.04	**3.45**	3.84	4.07	**4.61**	4.89	5.21	5.47	5.78	**5.78**	5.00
	1.05	0.32	0.58	1.03	1.62	1.81	2.16	**2.82**	3.12	**3.55**	3.95	4.20	**4.76**	5.06	5.40	5.68	6.03	**6.08**	5.37
160.0	1.20	0.33	0.60	1.07	1.69	1.89	2.26	**2.96**	3.29	**3.75**	4.18	4.45	**5.06**	5.39	5.77	6.09	6.53	**6.66**	6.09
	1.50	0.34	0.61	1.10	1.75	1.95	2.34	**3.07**	3.42	**3.90**	4.36	4.64	**5.30**	5.65	6.06	6.41	6.92	**7.13**	6.66
	3.00	0.35	0.63	1.12	1.79	2.00	2.40	**3.15**	3.51	**4.01**	4.48	4.78	**5.46**	5.83	6.27	6.64	7.19	**7.45**	7.06
	1.00	0.38	0.69	1.23	1.96	2.18	2.62	**3.43**	3.80	**4.34**	4.83	5.14	**5.83**	6.18	6.59	6.92	7.29	**7.21**	6.03
	1.05	0.39	0.70	1.25	1.99	2.22	2.67	**3.50**	3.89	**4.44**	4.95	5.26	**5.98**	6.35	6.78	7.12	7.54	**7.51**	6.40
180.0	1.20	0.40	0.72	1.29	2.06	2.31	2.77	**3.64**	4.05	**4.63**	5.17	5.51	**6.28**	6.68	7.15	7.54	8.03	**8.09**	7.11
	1.50	0.40	0.73	1.32	2.12	2.37	2.85	**3.76**	4.18	**4.79**	5.35	5.70	**6.51**	6.94	7.44	7.86	8.42	**8.56**	7.68
	3.00	0.41	0.74	1.35	2.16	2.42	2.91	**3.84**	4.27	**4.89**	5.48	5.84	**6.68**	7.13	7.65	8.09	8.70	**8.88**	8.09
	1.00	0.44	0.80	1.45	2.32	2.60	3.12	**4.10**	4.56	**5.20**	5.80	6.17	**6.99**	7.42	7.89	8.25	8.61	**8.35**	
	1.05	0.45	0.81	1.47	2.36	2.64	3.17	**4.17**	4.64	**5.30**	5.91	6.29	**7.15**	7.58	8.08	8.46	8.86	**8.64**	
200.0	1.20	0.46	0.83	1.51	2.43	2.72	3.28	**4.32**	4.81	**5.50**	6.14	6.54	**7.44**	7.91	8.45	8.87	9.35	**9.23**	
	1.50	0.47	0.85	1.54	2.49	2.78	3.36	**4.43**	4.94	**5.65**	6.32	6.74	**7.68**	8.17	8.74	9.20	9.74	**9.69**	
	3.00	0.47	0.86	1.57	2.53	2.83	3.42	**4.51**	5.03	**5.76**	6.45	6.87	**7.85**	8.36	8.95	9.43	10.02	**10.02**	
	1.00	0.52	0.94	1.71	2.76	3.09	3.72	**4.89**	5.44	**6.21**	6.93	7.36	**8.33**	8.81	9.33	9.69	9.93	**9.28**	
	1.05	0.52	0.95	1.73	2.79	3.13	3.77	**4.97**	5.53	**6.31**	7.04	7.49	**8.48**	8.98	9.52	9.90	10.18	**9.58**	
224.0	1.20	0.53	0.97	1.77	2.87	3.21	3.87	**5.11**	5.69	**6.51**	7.27	7.74	**8.78**	9.30	9.88	10.31	10.67	**10.17**	
	1.50	0.54	0.99	1.81	2.92	3.27	3.95	**5.23**	5.82	**6.66**	7.45	7.93	**9.01**	9.56	10.18	10.64	11.06	**10.63**	
	3.00	0.55	1.00	1.83	2.96	3.32	4.01	**5.31**	5.91	**6.77**	7.57	8.07	**9.18**	9.75	10.38	10.87	11.34	**10.96**	
	1.00	0.60	1.09	1.99	3.22	3.61	4.35	**5.74**	6.38	**7.28**	8.10	8.60	**9.68**	10.20	10.72	11.05	11.01		
	1.05	0.60	1.10	2.01	3.26	3.65	4.41	**5.81**	6.46	**7.38**	8.22	8.73	**9.83**	10.37	10.91	11.26	11.26		
250.0	1.20	0.61	1.12	2.06	3.33	3.73	4.51	**5.95**	6.63	**7.57**	8.44	8.97	**10.13**	10.69	11.28	11.67	11.75		
	1.50	0.62	1.14	2.09	3.39	3.80	4.59	**6.07**	6.76	**7.73**	8.62	9.17	**10.37**	10.96	11.58	11.99	12.14		
	3.00	0.63	1.15	2.11	3.43	3.84	4.65	**6.15**	6.85	**7.84**	8.75	9.31	**10.53**	11.14	11.78	12.22	12.42		
	1.00	0.69	1.27	2.32	3.75	4.20	5.07	**6.69**	7.43	**8.47**	9.40	9.96	**11.12**	11.64	12.12	12.31			
	1.05	0.69	1.28	2.34	3.79	4.25	5.13	**6.76**	7.52	**8.57**	9.51	10.08	**11.27**	11.81	12.30	12.52			
280.0	1.20	0.70	1.30	2.38	3.86	4.33	5.23	**6.91**	7.68	**8.76**	9.74	10.33	**11.57**	12.14	12.67	12.93			
	1.50	0.71	1.31	2.41	3.92	4.39	5.31	**7.02**	7.81	**8.92**	9.92	10.52	**11.80**	12.40	12.97	13.25			
	3.00	0.72	1.32	2.43	3.96	4.44	5.37	**7.10**	7.90	**9.03**	10.04	10.66	**11.97**	12.58	13.17	13.48			
	1.00	0.79	1.46	2.69	4.36	4.89	5.90	**7.77**	8.62	**9.79**	10.82	11.43	**12.62**	13.09	13.41	13.33			
	1.05	0.80	1.47	2.71	4.40	4.93	5.95	**7.84**	8.70	**9.89**	10.94	11.55	**12.77**	13.26	13.60	13.54			
315.0	1.20	0.81	1.49	2.75	4.47	5.01	6.06	**7.99**	8.87	**10.09**	11.16	11.80	**13.07**	13.59	13.97	13.95			
	1.50	0.82	1.51	2.78	4.53	5.08	6.14	**8.10**	9.00	**10.24**	11.34	11.99	**13.30**	13.85	14.26	14.28			
	3.00	0.82	1.52	2.80	4.57	5.12	6.20	**8.18**	9.09	**10.35**	11.47	12.13	**13.47**	14.03	14.47	14.51			
	1.00	0.91	1.69	3.10	5.05	5.66	6.83	**8.96**	9.92	**11.22**	12.33	12.95	**14.07**	14.40	14.40				
	1.05	0.92	1.70	3.13	5.08	5.70	6.88	**9.03**	10.01	**11.32**	12.44	13.08	**14.22**	14.57	14.59				
355.0	1.20	0.93	1.72	3.17	5.16	5.78	6.98	**9.18**	10.17	**11.51**	12.67	13.32	**14.52**	14.89	14.96				
	1.50	0.94	1.73	3.20	5.21	5.85	7.06	**9.29**	10.30	**11.67**	12.85	13.52	**14.75**	15.15	15.25				
	3.00	0.94	1.75	3.22	5.25	5.89	7.12	**9.37**	10.39	**11.78**	12.97	13.66	**14.92**	15.34	15.46				
	1.00	1.05	1.94	3.57	5.81	6.51	7.84	**10.25**	11.31	**12.71**	13.85	14.45	**15.33**	15.39					
	1.05	1.05	1.95	3.59	5.84	6.55	7.89	**10.32**	11.40	**12.81**	13.97	14.58	**15.48**	15.55					
400.0	1.20	1.06	1.97	3.63	5.91	6.63	8.00	**10.47**	11.56	**13.01**	14.19	14.82	**15.78**	15.88					
	1.50	1.07	1.98	3.66	5.97	6.69	8.08	**10.58**	11.69	**13.16**	14.37	15.02	**16.02**	16.14					
	3.00	1.08	2.00	3.69	6.01	6.74	8.14	**10.66**	11.78	**13.27**	14.50	15.16	**16.18**	16.33					
v_{max}	m/s	30																	

Belt length correction factor c_3 Table 47

L_w	mm	948	1048	1081	1228	1298	1448	1648	1748	1948	2048	2408	2848	3198	3598	4048	4548	5048	6048
c_3		0.75	0.77	0.78	0.80	0.81	0.83	0.86	0.87	0.90	0.91	0.94	0.98	1.00	1.03	1.05	1.08	1.10	1.14

CONTI MULTIFLEX® 22/C

Power rating P_R

Power rating P_R (kW) for a V-belt as a function of small pulley pitch diameter d_{wk}, transmission ratio i, small pulley speed n_k and pitch length L_w = 3802 mm.
Min. pulley diameter $d_{b\,min}$ = 180 mm.

CONTI MULTIFLEX® 22/C

Table 48

d_{wk} (mm)	i or 1:i	Speed of small pulley n_k (min^{-1})																	
		50	100	200	350	400	500	**700**	800	**950**	1100	1200	**1450**	1600	1800	2000	2200	2400	**2850**
180.0	1.00	0.53	0.95	1.69	2.66	2.95	3.51	**4.52**	4.98	**5.60**	6.17	6.51	**7.24**	7.59	7.95	8.18	8.28	8.24	**7.58**
	1.05	0.54	0.98	1.74	2.74	3.04	3.62	**4.67**	5.15	**5.81**	6.41	6.77	**7.56**	7.94	8.35	8.62	8.77	8.77	**8.21**
	1.20	0.56	1.02	1.82	2.89	3.21	3.84	**4.97**	5.50	**6.22**	6.88	7.29	**8.18**	8.63	9.12	9.48	9.71	9.80	**9.43**
	1.50	0.58	1.05	1.89	3.01	3.35	4.01	**5.21**	5.77	**6.55**	7.26	7.70	**8.68**	9.18	9.73	10.17	10.46	10.62	**10.41**
	3.00	0.59	1.08	1.94	3.09	3.45	4.13	**5.38**	5.96	**6.78**	7.53	7.99	**9.03**	9.56	10.17	10.65	10.99	11.20	**11.09**
200.0	1.00	0.64	1.16	2.07	3.29	3.66	4.37	**5.67**	6.26	**7.09**	7.83	8.28	**9.26**	9.73	10.23	10.55	10.71	10.67	**9.84**
	1.05	0.65	1.18	2.12	3.36	3.75	4.48	**5.82**	6.44	**7.30**	8.07	8.55	**9.58**	10.08	10.62	10.99	11.19	11.20	**10.47**
	1.20	0.67	1.22	2.20	3.51	3.92	4.70	**6.13**	6.78	**7.70**	8.55	9.06	**10.20**	10.77	11.40	11.85	12.14	12.23	**11.70**
	1.50	0.69	1.25	2.27	3.63	4.06	4.87	**6.36**	7.06	**8.03**	8.92	9.47	**10.70**	11.32	12.01	12.54	12.89	13.05	**12.67**
	3.00	0.70	1.28	2.32	3.72	4.15	4.99	**6.53**	7.25	**8.26**	9.19	9.76	**11.05**	11.70	12.44	13.02	13.42	13.63	**13.36**
224.0	1.00	0.76	1.39	2.52	4.03	4.50	5.39	**7.03**	7.78	**8.82**	9.77	10.34	**11.58**	12.17	12.78	13.16	13.31	13.21	**11.95**
	1.05	0.77	1.42	2.57	4.11	4.59	5.50	**7.18**	7.96	**9.03**	10.01	10.61	**11.89**	12.52	13.17	13.60	13.80	13.73	**12.58**
	1.20	0.80	1.46	2.65	4.26	4.76	5.72	**7.48**	8.30	**9.44**	10.48	11.12	**12.52**	13.21	13.95	14.46	14.74	14.77	**13.80**
	1.50	0.81	1.49	2.72	4.38	4.89	5.89	**7.72**	8.57	**9.76**	10.86	11.53	**13.01**	13.75	14.56	15.15	15.49	15.59	**14.78**
	3.00	0.83	1.52	2.77	4.46	4.99	6.01	**7.89**	8.77	**9.99**	11.12	11.82	**13.36**	14.14	15.00	15.63	16.02	16.17	**15.46**
250.0	1.00	0.90	1.65	3.01	4.83	5.39	6.48	**8.47**	9.39	**10.65**	11.80	12.49	**13.95**	14.64	15.31	15.68	15.74	15.45	
	1.05	0.91	1.67	3.05	4.90	5.48	6.59	**8.63**	9.56	**10.86**	12.04	12.75	**14.27**	14.99	15.70	16.12	16.22	15.98	
	1.20	0.93	1.72	3.14	5.05	5.65	6.80	**8.93**	9.91	**11.27**	12.51	13.27	**14.89**	15.68	16.48	16.98	17.17	17.01	
	1.50	0.95	1.75	3.20	5.17	5.79	6.97	**9.17**	10.18	**11.60**	12.89	13.68	**15.39**	16.22	17.09	17.67	17.92	17.83	
	3.00	0.96	1.77	3.25	5.26	5.89	7.09	**9.33**	10.37	**11.82**	13.15	13.97	**15.74**	16.61	17.53	18.15	18.45	18.41	
280.0	1.00	1.06	1.95	3.56	5.73	6.41	7.71	**10.10**	11.19	**12.70**	14.05	14.85	**16.51**	17.25	17.91	18.16	17.97		
	1.05	1.07	1.97	3.60	5.81	6.50	7.82	**10.25**	11.37	**12.91**	14.29	15.11	**16.83**	17.60	18.30	18.60	18.46		
	1.20	1.09	2.01	3.69	5.96	6.67	8.04	**10.56**	11.71	**13.32**	14.76	15.63	**17.45**	18.29	19.08	19.46	19.40		
	1.50	1.10	2.04	3.75	6.08	6.81	8.21	**10.79**	11.98	**13.64**	15.14	16.04	**17.95**	18.83	19.69	20.14	20.15		
	3.00	1.12	2.07	3.80	6.16	6.90	8.33	**10.96**	12.18	**13.87**	15.40	16.33	**18.30**	19.22	20.12	20.62	20.69		
315.0	1.00	1.24	2.28	4.19	6.77	7.58	9.13	**11.95**	13.23	**14.99**	16.53	17.44	**19.23**	19.95	20.46	20.41			
	1.05	1.25	2.31	4.23	6.85	7.67	9.24	**12.11**	13.41	**15.20**	16.78	17.70	**19.55**	20.30	20.85	20.85			
	1.20	1.27	2.35	4.32	7.00	7.84	9.45	**12.41**	13.75	**15.61**	17.25	18.22	**20.17**	20.99	21.63	21.71			
	1.50	1.28	2.38	4.39	7.12	7.98	9.62	**12.65**	14.03	**15.93**	17.62	18.63	**20.66**	21.53	22.24	22.39			
	3.00	1.30	2.41	4.44	7.21	8.08	9.74	**12.81**	14.22	**16.16**	17.89	18.92	**21.01**	21.92	22.68	22.87			
355.0	1.00	1.44	2.67	4.91	7.95	8.90	10.71	**14.00**	15.48	**17.48**	19.19	20.17	**21.95**	22.54	22.69				
	1.05	1.45	2.69	4.95	8.02	8.98	10.82	**14.16**	15.66	**17.69**	19.44	20.43	**22.27**	22.89	23.08				
	1.20	1.47	2.73	5.04	8.17	9.16	11.03	**14.46**	16.00	**18.10**	19.91	20.95	**22.89**	23.58	23.86				
	1.50	1.49	2.77	5.10	8.29	9.29	11.20	**14.70**	16.28	**18.42**	20.29	21.36	**23.39**	24.12	24.47				
	3.00	1.50	2.79	5.15	8.38	9.39	11.33	**14.87**	16.47	**18.65**	20.55	21.65	**23.74**	24.51	24.91				
400.0	1.00	1.67	3.09	5.70	9.24	10.35	12.45	**16.23**	17.90	**20.11**	21.94	22.92	**24.49**	24.75					
	1.05	1.68	3.12	5.75	9.32	10.44	12.56	**16.38**	18.08	**20.32**	22.18	23.19	**24.81**	25.11					
	1.20	1.70	3.16	5.83	9.47	10.61	12.77	**16.68**	18.42	**20.73**	22.65	23.70	**25.43**	25.79					
	1.50	1.72	3.19	5.90	9.59	10.74	12.94	**16.92**	18.69	**21.05**	23.03	24.11	**25.93**	26.34					
	3.00	1.73	3.22	5.95	9.68	10.84	13.06	**17.09**	18.89	**21.28**	23.29	24.40	**26.28**	26.73					
450.0	1.00	1.92	3.56	6.57	10.66	11.93	14.33	**18.59**	20.44	**22.80**	24.64	25.56	**26.59**						
	1.05	1.93	3.58	6.62	10.74	12.01	14.44	**18.75**	20.61	**23.01**	24.89	25.82	**26.91**						
	1.20	1.95	3.63	6.70	10.89	12.19	14.65	**19.05**	20.96	**23.42**	25.36	26.34	**27.53**						
	1.50	1.96	3.66	6.77	11.01	12.32	14.82	**19.29**	21.23	**23.74**	25.73	26.74	**28.03**						
	3.00	1.98	3.69	6.82	11.09	12.42	14.94	**19.46**	21.42	**23.97**	26.00	27.03	**28.38**						
500.0	1.00	2.16	4.03	7.44	12.04	13.47	16.15	**20.84**	22.81	**25.23**	26.97	27.70							
	1.05	2.17	4.05	7.48	12.12	13.56	16.26	**20.99**	22.98	**25.44**	27.21	27.96							
	1.20	2.19	4.09	7.57	12.27	13.73	16.48	**21.29**	23.33	**25.85**	27.68	28.48							
	1.50	2.21	4.13	7.63	12.39	13.87	16.65	**21.53**	23.60	**26.18**	28.06	28.89							
	3.00	2.22	4.15	7.68	12.48	13.96	16.77	**21.70**	23.79	**26.41**	28.32	29.18							
v_{max}	m/s	30																	

Belt length correction factor c_3

Table 49

L_w	mm	1142	1302	1452	1552	1752	2052	2292	2552	3052	3402	3602	3802	4052	4552	5052	6052	7152	8052
c_3		0.75	0.78	0.80	0.81	0.84	0.87	0.89	0.92	0.95	0.98	0.99	1.00	1.01	1.04	1.06	1.10	1.14	1.17

CONTI MULTIFLEX® 25/–

Power rating P_R

Power rating P_R (kW) for a V-belt as a function of small pulley pitch diameter d_{wk}, transmission ratio i, small pulley speed n_k and pitch length L_w = 4561 mm.
Min. pulley diameter $d_{b\,min}$ = 224 mm.

CONTI MULTIFLEX® 25/– Table 50

d_{wk} (mm)	i or 1:i	Speed of small pulley n_k (min^{-1})																	
		50	100	150	200	250	300	400	500	600	**700**	800	**950**	1100	1200	**1450**	1600	1800	2000
224.0	1.00	0.69	1.23	1.72	2.17	2.61	3.02	3.80	4.53	5.21	**5.84**	6.43	**7.24**	7.95	8.37	**9.20**	9.55	9.82	9.85
	1.05	0.70	1.25	1.75	2.22	2.67	3.09	3.89	4.64	5.35	**6.00**	6.62	**7.46**	8.21	8.65	**9.54**	9.92	10.24	10.32
	1.20	0.72	1.30	1.82	2.31	2.78	3.23	4.08	4.87	5.62	**6.32**	6.98	**7.90**	8.71	9.20	**10.20**	10.65	11.06	11.23
	1.50	0.74	1.33	1.88	2.39	2.87	3.34	4.22	5.05	5.84	**6.58**	7.27	**8.24**	9.11	9.63	**10.73**	11.23	11.71	11.96
	3.00	0.75	1.36	1.91	2.44	2.93	3.41	4.32	5.18	5.99	**6.76**	7.48	**8.48**	9.39	9.94	**11.10**	11.64	12.18	12.47
250.0	1.00	0.82	1.47	2.07	2.63	3.16	3.68	4.65	5.56	6.41	**7.20**	7.95	**8.97**	9.86	10.38	**11.41**	11.82	12.11	12.08
	1.05	0.83	1.49	2.10	2.68	3.22	3.75	4.74	5.67	6.55	**7.37**	8.14	**9.19**	10.11	10.66	**11.75**	12.19	12.53	12.55
	1.20	0.85	1.54	2.17	2.77	3.34	3.88	4.92	5.90	6.82	**7.69**	8.50	**9.62**	10.62	11.21	**12.41**	12.93	13.36	13.46
	1.50	0.87	1.58	2.23	2.84	3.43	3.99	5.07	6.08	7.04	**7.94**	8.79	**9.97**	11.02	11.64	**12.93**	13.50	14.01	14.19
	3.00	0.88	1.60	2.26	2.89	3.49	4.07	5.17	6.21	7.19	**8.12**	9.00	**10.21**	11.30	11.95	**13.30**	13.91	14.47	14.70
280.0	1.00	0.97	1.75	2.47	3.15	3.80	4.42	5.61	6.72	7.77	**8.74**	9.66	**10.89**	11.96	12.58	**13.76**	14.19	14.41	14.19
	1.05	0.98	1.77	2.50	3.20	3.86	4.49	5.70	6.84	7.91	**8.91**	9.84	**11.11**	12.22	12.86	**14.10**	14.56	14.83	14.66
	1.20	1.00	1.82	2.57	3.29	3.97	4.63	5.89	7.07	8.18	**9.23**	10.21	**11.55**	12.72	13.41	**14.76**	15.29	15.65	15.57
	1.50	1.02	1.85	2.63	3.36	4.06	4.74	6.03	7.25	8.40	**9.48**	10.50	**11.89**	13.12	13.84	**15.28**	15.87	16.30	16.29
	3.00	1.03	1.88	2.67	3.41	4.13	4.82	6.13	7.38	8.55	**9.66**	10.70	**12.13**	13.40	14.15	**15.66**	16.28	16.76	16.81
315.0	1.00	1.14	2.07	2.93	3.75	4.53	5.28	6.72	8.06	9.32	**10.49**	11.58	**13.04**	14.28	14.98	**16.22**	16.58	16.57	15.94
	1.05	1.15	2.09	2.97	3.80	4.59	5.35	6.81	8.18	9.46	**10.66**	11.77	**13.26**	14.54	15.26	**16.55**	16.95	16.99	16.41
	1.20	1.17	2.14	3.04	3.89	4.70	5.49	6.99	8.41	9.73	**10.98**	12.13	**13.70**	15.04	15.81	**17.22**	17.68	17.81	17.32
	1.50	1.19	2.17	3.09	3.96	4.79	5.60	7.14	8.59	9.95	**11.23**	12.42	**14.04**	15.44	16.24	**17.74**	18.26	18.46	18.05
	3.00	1.20	2.20	3.13	4.01	4.86	5.68	7.24	8.71	10.10	**11.41**	12.63	**14.29**	15.72	16.55	**18.11**	18.67	18.92	18.56
355.0	1.00	1.33	2.43	3.45	4.43	5.36	6.25	7.96	9.56	11.05	**12.43**	13.69	**15.37**	16.74	17.47	**18.61**	18.76	18.28	
	1.05	1.34	2.45	3.49	4.47	5.42	6.32	8.05	9.67	11.19	**12.59**	13.88	**15.59**	17.00	17.75	**18.95**	19.14	18.70	
	1.20	1.36	2.50	3.56	4.56	5.53	6.46	8.24	9.90	11.46	**12.91**	14.25	**16.02**	17.50	18.30	**19.61**	19.87	19.52	
	1.50	1.38	2.54	3.61	4.64	5.62	6.57	8.38	10.08	11.68	**13.16**	14.54	**16.37**	17.90	18.74	**20.14**	20.45	20.17	
	3.00	1.39	2.56	3.65	4.69	5.68	6.65	8.48	10.21	11.83	**13.34**	14.74	**16.61**	18.18	19.04	**20.51**	20.86	20.63	
400.0	1.00	1.54	2.83	4.03	5.18	6.27	7.33	9.33	11.20	12.93	**14.52**	15.96	**17.80**	19.23	19.94	**20.73**	20.46		
	1.05	1.56	2.86	4.07	5.22	6.33	7.40	9.43	11.32	13.07	**14.68**	16.14	**18.02**	19.49	20.22	**21.07**	20.84		
	1.20	1.58	2.90	4.14	5.32	6.45	7.54	9.61	11.55	13.35	**15.00**	16.51	**18.45**	19.99	20.77	**21.73**	21.57		
	1.50	1.60	2.94	4.19	5.39	6.54	7.64	9.75	11.73	13.56	**15.26**	16.80	**18.80**	20.39	21.20	**22.26**	22.15		
	3.00	1.61	2.96	4.23	5.44	6.60	7.72	9.86	11.86	13.72	**15.44**	17.00	**19.04**	20.67	21.51	**22.63**	22.56		
450.0	1.00	1.78	3.28	4.67	6.00	7.28	8.50	10.83	12.98	14.95	**16.73**	18.31	**20.26**	21.64	22.22	**22.30**			
	1.05	1.79	3.30	4.71	6.05	7.33	8.57	10.92	13.09	15.09	**16.90**	18.50	**20.48**	21.90	22.50	**22.63**			
	1.20	1.81	3.35	4.78	6.14	7.45	8.71	11.10	13.32	15.36	**17.22**	18.86	**20.91**	22.40	23.05	**23.30**			
	1.50	1.83	3.38	4.83	6.21	7.54	8.82	11.25	13.50	15.58	**17.47**	19.15	**21.26**	22.80	23.48	**23.82**			
	3.00	1.85	3.41	4.87	6.26	7.60	8.90	11.35	13.63	15.73	**17.65**	19.36	**21.50**	23.08	23.79	**24.19**			
500.0	1.00	2.01	3.71	5.30	6.82	8.26	9.66	12.29	14.70	16.88	**18.82**	20.49	**22.44**	23.63	23.96				
	1.05	2.03	3.74	5.34	6.86	8.32	9.73	12.38	14.81	17.02	**18.99**	20.68	**22.66**	23.89	24.24				
	1.20	2.05	3.78	5.41	6.95	8.44	9.87	12.56	15.04	17.30	**19.31**	21.04	**23.09**	24.39	24.79				
	1.50	2.07	3.82	5.46	7.03	8.53	9.97	12.71	15.22	17.51	**19.56**	21.33	**23.44**	24.79	25.22				
	3.00	2.08	3.84	5.50	7.08	8.59	10.05	12.81	15.35	17.67	**19.74**	21.54	**23.68**	25.07	25.53				
560.0	1.00	2.29	4.23	6.05	7.78	9.43	11.02	13.99	16.69	19.09	**21.15**	22.86	**24.65**	25.41					
	1.05	2.30	4.26	6.09	7.83	9.49	11.09	14.08	16.80	19.23	**21.32**	23.05	**24.87**	25.67					
	1.20	2.33	4.30	6.15	7.92	9.61	11.23	14.27	17.03	19.50	**21.64**	23.41	**25.31**	26.17					
	1.50	2.34	4.34	6.21	7.99	9.70	11.33	14.41	17.21	19.72	**21.89**	23.70	**25.65**	26.57					
	3.00	2.36	4.36	6.25	8.04	9.76	11.41	14.51	17.34	19.87	**22.07**	23.91	**25.90**	26.85					
630.0	1.00	2.61	4.83	6.91	8.89	10.77	12.57	15.92	18.90	21.48	**23.62**	25.25	**26.63**						
	1.05	2.62	4.86	6.95	8.93	10.83	12.64	16.01	19.02	21.62	**23.78**	25.43	**26.85**						
	1.20	2.65	4.90	7.01	9.02	10.94	12.78	16.19	19.25	21.90	**24.10**	25.80	**27.29**						
	1.50	2.66	4.94	7.07	9.10	11.03	12.89	16.34	19.43	22.11	**24.35**	26.09	**27.63**						
	3.00	2.68	4.96	7.11	9.15	11.10	12.96	16.44	19.55	22.27	**24.53**	26.29	**27.88**						
v_{max}	m/s	30																	

Belt length correction factor c_3 Table 51

L_w	mm	1461	1561	1961	2181	2301	2561	2861	3061	3411	3811	4061	4561	5061	5661	6361	7161	8061	9061
c_3		0.77	0.78	0.32	0.85	0.86	0.88	0.90	0.92	0.94	0.96	0.98	1.00	1.02	1.05	1.07	1.10	1.13	1.15

CONTI MULTIFLEX® 32/D

Power rating P_R

Power rating P_R (kW) for a V-belt as a function of small pulley pitch diameter d_{wk}, transmission ratio i, small pulley speed n_k and pitch length L_w = 6375 mm.
Min. pulley diameter $d_{b\,min}$ = 315 mm.

CONTI MULTIFLEX® 32/D

Table 52

d_{wk} (mm)	i or 1:i	Speed of small pulley n_k (min^{-1})																	
		50	100	150	200	250	300	350	400	450	500	600	**700**	800	**950**	1100	1200	1300	**1450**
315.0	1.00	1.78	3.22	4.54	5.77	6.93	8.04	9.10	10.11	11.08	12.00	13.73	**15.31**	16.71	**18.51**	19.91	20.61	21.10	**21.45**
	1.05	1.81	3.29	4.63	5.90	7.09	8.23	9.32	10.36	11.36	12.32	14.11	**15.75**	17.22	**19.11**	20.61	21.36	21.92	**22.36**
	1.20	1.87	3.41	4.82	6.14	7.40	8.60	9.75	10.86	11.92	12.94	14.86	**16.61**	18.21	**20.29**	21.97	22.85	23.53	**24.16**
	1.50	1.92	3.51	4.97	6.34	7.65	8.90	10.09	11.25	12.36	13.43	15.44	**17.30**	18.99	**21.22**	23.04	24.02	24.80	**25.58**
	3.00	1.95	3.58	5.07	6.48	7.82	9.10	10.34	11.53	12.67	13.77	15.86	**17.78**	19.55	**21.88**	23.81	24.86	25.71	**26.58**
355.0	1.00	2.16	3.94	5.58	7.11	8.57	9.97	11.30	12.58	13.81	14.98	17.18	**19.17**	20.95	**23.21**	24.93	25.75	26.30	**26.57**
	1.05	2.19	4.00	5.67	7.24	8.73	10.16	11.52	12.83	14.09	15.30	17.56	**19.61**	21.46	**23.81**	25.62	26.51	27.12	**27.49**
	1.20	2.25	4.13	5.86	7.49	9.04	10.53	11.96	13.33	14.65	15.92	18.30	**20.48**	22.45	**24.98**	26.98	27.99	28.72	**29.28**
	1.50	2.30	4.22	6.00	7.68	9.29	10.82	12.30	13.72	15.09	16.41	18.89	**21.17**	23.23	**25.91**	28.06	29.16	30.00	**30.70**
	3.00	2.33	4.29	6.11	7.82	9.46	11.03	12.54	14.00	15.40	16.75	19.31	**21.65**	23.79	**26.57**	28.82	30.00	30.90	**31.70**
400.0	1.00	2.58	4.74	6.73	8.61	10.39	12.10	13.74	15.31	16.82	18.26	20.95	**23.37**	25.51	**28.16**	30.09	30.93	31.39	**31.32**
	1.05	2.61	4.80	6.82	8.73	10.55	12.29	13.96	15.57	17.10	18.57	21.32	**23.81**	26.01	**28.76**	30.78	31.69	32.21	**32.24**
	1.20	2.67	4.92	7.01	8.98	10.86	12.66	14.40	16.06	17.66	19.19	22.07	**24.67**	27.00	**29.94**	32.14	33.17	33.82	**34.03**
	1.50	2.72	5.02	7.16	9.18	11.11	12.96	14.74	16.45	18.10	19.68	22.65	**25.36**	27.79	**30.87**	33.22	34.35	35.09	**35.45**
	3.00	2.76	5.09	7.26	9.31	11.28	13.17	14.98	16.73	18.41	20.03	23.07	**25.85**	28.34	**31.53**	33.98	35.18	36.00	**36.46**
450.0	1.00	3.05	5.61	7.99	10.24	12.39	14.44	16.40	18.28	20.08	21.80	24.99	**27.82**	30.29	**33.23**	35.18	35.87	36.04	
	1.05	3.08	5.68	8.09	10.37	12.55	14.63	16.62	18.54	20.37	22.12	25.37	**28.27**	30.79	**33.83**	35.88	36.63	36.86	
	1.20	3.14	5.80	8.27	10.62	12.85	15.00	17.06	19.03	20.92	22.74	26.11	**29.13**	31.78	**35.01**	37.24	38.12	38.47	
	1.50	3.19	5.90	8.42	10.81	13.10	15.29	17.40	19.42	21.37	23.23	26.69	**29.82**	32.57	**35.94**	38.31	39.29	39.74	
	3.00	3.22	5.97	8.53	10.95	13.27	15.50	17.64	19.70	21.68	23.57	27.11	**30.30**	33.12	**36.60**	39.08	40.12	40.64	
500.0	1.00	3.51	6.48	9.25	11.86	14.35	16.74	19.01	21.19	23.27	25.24	28.87	**32.06**	34.76	**37.81**	39.54	39.89	39.52	
	1.05	3.54	6.55	9.34	11.99	14.51	16.92	19.23	21.44	23.55	25.56	29.25	**32.50**	35.26	**38.41**	40.24	40.64	40.34	
	1.20	3.60	6.67	9.53	12.23	14.82	17.30	19.67	21.94	24.11	26.18	29.99	**33.36**	36.25	**39.59**	41.60	42.13	41.95	
	1.50	3.65	6.77	9.67	12.43	15.06	17.59	20.01	22.33	24.55	26.67	30.58	**34.05**	37.03	**40.52**	42.67	43.30	43.22	
	3.00	3.68	6.84	9.78	12.57	15.24	17.80	20.25	22.61	24.86	27.01	31.00	**34.53**	37.59	**41.18**	43.44	44.13	44.13	
560.0	1.00	4.06	7.51	10.73	13.78	16.67	19.44	22.08	24.59	26.98	29.23	33.32	**36.82**	39.67	**42.60**	43.72			
	1.05	4.09	7.58	10.83	13.90	16.83	19.63	22.30	24.85	27.26	29.55	33.70	**37.26**	40.18	**43.20**	44.41			
	1.20	4.15	7.70	11.01	14.15	17.14	20.00	22.74	25.34	27.82	30.17	34.44	**38.13**	41.17	**44.37**	45.77			
	1.50	4.20	7.80	11.16	14.34	17.39	20.30	23.08	25.73	28.26	30.66	35.03	**38.81**	41.95	**45.30**	46.85			
	3.00	4.23	7.87	11.26	14.48	17.56	20.50	23.32	26.01	28.57	31.00	35.45	**39.30**	42.50	**45.96**	47.62			
630.0	1.00	4.69	8.70	12.44	15.98	19.34	22.53	25.57	28.45	31.15	33.69	38.21	**41.92**	44.75	**47.13**				
	1.05	4.72	8.77	12.54	16.10	19.49	22.72	25.79	28.70	31.44	34.01	38.58	**42.36**	45.25	**47.73**				
	1.20	4.78	8.89	12.72	16.35	19.80	23.09	26.22	29.19	31.99	34.62	39.33	**43.23**	46.24	**48.90**				
	1.50	4.83	8.99	12.87	16.54	20.05	23.39	26.57	29.58	32.44	35.11	39.91	**43.91**	47.02	**49.83**				
	3.00	4.87	9.06	12.97	16.68	20.22	23.60	26.81	29.86	32.75	35.46	40.33	**44.40**	47.58	**50.49**				
710.0	1.00	5.41	10.05	14.37	18.45	22.32	25.98	29.44	32.69	35.71	38.51	43.35	**47.09**	49.60					
	1.05	5.44	10.11	14.46	18.57	22.47	26.17	29.66	32.94	36.00	38.82	43.73	**47.53**	50.10					
	1.20	5.50	10.23	14.65	18.82	22.78	26.54	30.09	33.43	36.55	39.44	44.47	**48.39**	51.09					
	1.50	5.55	10.33	14.79	19.02	23.03	26.83	30.43	33.82	36.99	39.93	45.05	**49.08**	51.88					
	3.00	5.58	10.40	14.90	19.16	23.20	27.04	30.68	34.10	37.31	40.28	45.47	**49.56**	52.43					
800.0	1.00	6.20	11.54	16.50	21.18	25.59	29.74	33.63	37.24	40.55	43.55	48.53	**51.98**	53.73					
	1.05	6.24	11.60	16.60	21.30	25.75	29.93	33.85	37.49	40.84	43.87	48.91	**52.43**	54.24					
	1.20	6.30	11.73	16.78	21.55	26.06	30.30	34.29	37.99	41.40	44.49	49.65	**53.29**	55.23					
	1.50	6.35	11.82	16.93	21.75	26.30	30.60	34.63	38.38	41.84	44.98	50.24	**53.98**	56.01					
	3.00	6.38	11.89	17.03	21.89	26.48	30.81	34.87	38.66	42.15	45.33	50.65	**54.46**	56.57					
900.0	1.00	7.08	13.18	18.84	24.15	29.13	33.79	38.09	42.02	45.56	48.66	53.47	**56.18**						
	1.05	7.11	13.24	18.93	24.28	29.29	33.98	38.31	42.27	45.84	48.98	53.85	**56.62**						
	1.20	7.17	13.36	19.12	24.52	29.60	34.35	38.74	42.77	46.40	49.60	54.59	**57.49**						
	1.50	7.22	13.46	19.27	24.72	29.85	34.64	39.09	43.16	46.84	50.09	55.18	**58.17**						
	3.00	7.26	13.53	19.37	24.86	30.02	34.85	39.33	43.44	47.15	50.43	55.60	**58.66**						
v_{max}	m/s	30																	

Belt length correction factor c_3

Table 53

L_w	mm	2075	2435	2575	2875	3225	3625	4075	4575	5075	5675	6075	6375	7175	8075	9075	10075	11275	12575
c_3		0.77	0.80	0.81	0.83	0.86	0.88	0.91	0.93	0.95	0.98	0.99	1.00	1.03	1.05	1.08	1.10	1.13	1.15

CONTI MULTIFLEX® 40/E

Power rating P_R

Power rating P_R (kW) for a V-belt as a function of small pulley pitch diameter d_{wk}, transmission ratio i, small pulley speed n_k and pitch length L_w = 7182 mm.
Min. pulley diameter $d_{b\,min}$ = 450 mm.

CONTI MULTIFLEX® 40/E

Table 54

d_{wk} (mm)	i or 1:i	Speed of small pulley n_k (min^{-1})																		
		20	50	100	150	200	250	300	350	400	450	500	550	600	**700**	800	**950**	1100	1200
450.0	1.00	1.49	3.32	6.00	8.43	10.69	12.81	14.80	16.68	18.44	20.09	21.63	23.06	24.37	**26.63**	28.38	**29.97**	30.18	29.48
	1.05	1.51	3.37	6.11	8.59	10.90	13.07	15.12	17.05	18.86	20.57	22.16	23.64	25.01	**27.38**	29.23	**30.98**	31.35	30.76
	1.20	1.56	3.47	6.32	8.91	11.32	13.60	15.74	17.78	19.70	21.51	23.20	24.79	26.26	**28.83**	30.90	**32.96**	33.64	33.26
	1.50	1.59	3.56	6.48	9.15	11.65	14.01	16.24	18.35	20.36	22.25	24.03	25.70	27.25	**29.99**	32.22	**34.53**	35.46	35.24
	3.00	1.61	3.62	6.60	9.33	11.88	14.30	16.59	18.76	20.82	22.78	24.61	26.34	27.95	**30.81**	33.15	**35.64**	36.74	36.64
500.0	1.00	1.75	3.91	7.11	10.03	12.75	15.30	17.71	19.98	22.11	24.10	25.96	27.66	29.23	**31.88**	33.87	**35.49**	35.27	34.00
	1.05	1.77	3.96	7.21	10.19	12.96	15.57	18.03	20.35	22.53	24.58	26.49	28.25	29.86	**32.63**	34.72	**36.50**	36.44	35.27
	1.20	1.81	4.06	7.42	10.50	13.38	16.09	18.65	21.08	23.37	25.52	27.53	29.39	31.11	**34.08**	36.39	**38.47**	38.73	37.77
	1.50	1.84	4.15	7.59	10.75	13.71	16.50	19.15	21.66	24.03	26.26	28.35	30.30	32.10	**35.24**	37.71	**40.04**	40.54	39.75
	3.00	1.87	4.21	7.70	10.92	13.94	16.79	19.50	22.07	24.49	26.79	28.94	30.95	32.80	**36.06**	38.64	**41.15**	41.83	41.16
560.0	1.00	2.05	4.61	8.42	11.92	15.18	18.25	21.14	23.85	26.40	28.76	30.95	32.95	34.76	**37.75**	39.85	**41.13**	39.91	
	1.05	2.07	4.66	8.53	12.08	15.39	18.51	21.45	24.22	26.82	29.24	31.48	33.54	35.40	**38.50**	40.70	**42.14**	41.08	
	1.20	2.11	4.77	8.74	12.39	15.81	19.03	22.08	24.95	27.65	30.18	32.53	34.68	36.65	**39.95**	42.36	**44.12**	43.37	
	1.50	2.15	4.85	8.90	12.63	16.14	19.45	22.57	25.53	28.31	30.92	33.35	35.59	37.64	**41.11**	43.68	**45.69**	45.18	
	3.00	2.17	4.91	9.02	12.81	16.37	19.74	22.92	25.94	28.78	31.45	33.94	36.23	38.34	**41.93**	44.62	**46.80**	46.47	
630.0	1.00	2.40	5.42	9.94	14.09	17.97	21.62	25.04	28.25	31.23	33.99	36.51	38.78	40.79	**43.96**	45.91	**46.25**		
	1.05	2.42	5.47	10.04	14.25	18.18	21.88	25.36	28.62	31.66	34.47	37.04	39.37	41.43	**44.70**	46.76	**47.26**		
	1.20	2.46	5.57	10.25	14.56	18.60	22.40	25.98	29.35	32.49	35.41	38.08	40.51	42.68	**46.16**	48.42	**49.24**		
	1.50	2.50	5.66	10.42	14.81	18.93	22.81	26.48	29.93	33.15	36.15	38.91	41.42	43.67	**47.32**	49.74	**50.81**		
	3.00	2.52	5.72	10.53	14.98	19.16	23.11	26.83	30.34	33.62	36.68	39.49	42.06	44.37	**48.13**	50.68	**51.92**		
710.0	1.00	2.80	6.33	11.65	16.54	21.10	25.38	29.39	33.11	36.54	39.67	42.49	44.96	47.08	**50.15**	51.52			
	1.05	2.82	6.39	11.76	16.70	21.32	25.65	29.71	33.48	36.97	40.15	43.02	45.55	47.71	**50.89**	52.37			
	1.20	2.86	6.49	11.96	17.01	21.73	26.17	30.33	34.21	37.80	41.09	44.06	46.69	48.96	**52.35**	54.03			
	1.50	2.89	6.57	12.13	17.26	22.06	26.58	30.83	34.79	38.46	41.83	44.88	47.60	49.95	**53.50**	55.35			
	3.00	2.92	6.63	12.25	17.43	22.30	26.88	31.18	35.20	38.93	42.36	45.47	48.24	50.65	**54.32**	56.29			
800.0	1.00	3.24	7.35	13.55	19.25	24.56	29.52	34.12	38.36	42.22	45.67	48.69	51.25	53.32	**55.84**	55.99			
	1.05	3.26	7.40	13.66	19.41	24.77	29.78	34.44	38.74	42.65	46.15	49.22	51.84	53.95	**56.58**	56.84			
	1.20	3.30	7.51	13.86	19.72	25.19	30.31	35.07	39.46	43.48	47.09	50.27	52.98	55.20	**58.04**	58.51			
	1.50	3.33	7.59	14.03	19.97	25.52	30.72	35.56	40.04	44.14	47.83	51.09	53.89	56.19	**59.19**	59.83			
	3.00	3.36	7.65	14.15	20.14	25.75	31.01	35.91	40.45	44.61	48.36	51.68	54.53	56.89	**60.01**	60.76			
900.0	1.00	3.72	8.47	15.63	22.21	28.32	33.98	39.19	43.92	48.14	51.82	54.90	57.35	59.12	**60.44**				
	1.05	3.74	8.52	15.74	22.37	28.53	34.25	39.51	44.29	48.57	52.30	55.43	57.94	59.76	**61.18**				
	1.20	3.79	8.63	15.95	22.68	28.95	34.77	40.13	45.02	49.40	53.23	56.47	59.08	61.01	**62.64**				
	1.50	3.82	8.71	16.11	22.93	29.28	35.18	40.63	45.60	50.06	53.98	57.30	59.99	62.00	**63.79**				
	3.00	3.84	8.77	16.23	23.11	29.51	35.47	40.98	46.01	50.53	54.50	57.88	60.63	62.70	**64.61**				
1000.0	1.00	4.20	9.58	17.69	25.12	31.99	38.31	44.05	49.17	53.63	57.37	60.33	62.44	63.64					
	1.05	4.23	9.63	17.79	25.28	32.20	38.57	44.37	49.54	54.06	57.85	60.86	63.02	64.28					
	1.20	4.27	9.74	18.00	25.59	32.62	39.09	44.99	50.27	54.89	58.79	61.90	64.17	65.53					
	1.50	4.30	9.82	18.17	25.84	32.95	39.50	45.49	50.85	55.55	59.53	62.73	65.08	66.52					
	3.00	4.32	9.88	18.28	26.01	33.18	39.80	45.84	51.26	56.02	60.06	63.31	65.72	67.22					
1120.0	1.00	4.78	10.89	20.12	28.55	36.28	43.30	49.58	55.04	59.61	63.20	65.72	67.08						
	1.05	4.80	10.95	20.22	28.70	36.49	43.57	49.90	55.41	60.03	63.68	66.25	67.66						
	1.20	4.84	11.05	20.43	29.02	36.91	44.09	50.52	56.14	60.87	64.61	67.29	68.81						
	1.50	4.87	11.13	20.60	29.26	37.24	44.50	51.02	56.72	61.53	65.35	68.12	69.72						
	3.00	4.89	11.19	20.71	29.44	37.47	44.79	51.37	57.13	61.99	65.88	68.70	70.36						
1250.0	1.00	5.39	12.30	22.71	32.18	40.78	48.48	55.19	60.83	65.27	68.38	70.05							
	1.05	5.41	12.35	22.82	32.34	40.99	48.74	55.51	61.20	65.69	68.86	70.58							
	1.20	5.45	12.46	23.03	32.65	41.40	49.26	56.14	61.93	66.53	69.80	71.62							
	1.50	5.49	12.54	23.19	32.89	41.73	49.67	56.63	62.51	67.19	70.54	72.45							
	3.00	5.51	12.60	23.31	33.07	41.97	49.97	56.98	62.92	67.65	71.07	73.03							
v_{max}	m/s	30																	

Belt length correction factor c_3

Table 55

L_w	mm	5082	5682	7182	8082	9082	10082	11282
c_3		0.93	0.95	1.00	1.03	1.05	1.07	1.10

Example of calculation for two-pulley drive

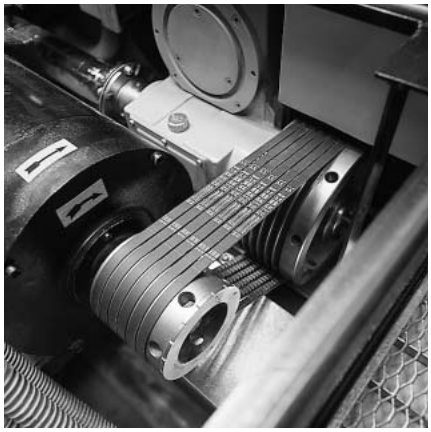

Printing machine

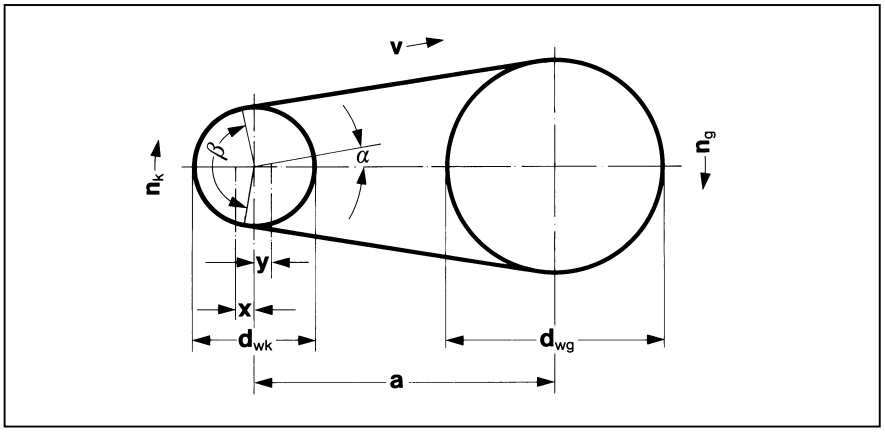

Two-pulley drive Fig. 19

Example

Prime mover:	diesel engine	P = 50 kW
		n_1 = 2400 min^{-1}
Driven machine:	stand by power unit	n_2 = 1500 min^{-1}
Service conditions:	large pulley diameter	≦ 240
	centre distance optional	
	daily operating period 24 hours	

Service factor

c_2 from table 10, page 31

$c_2 = 1.3$

Transmission ratio

$$i = \frac{n_1}{n_2} = \frac{d_{w2}}{d_{w1}}$$

$$i = \frac{2400}{1500} = 1.6$$

Pitch diameter of pulleys

$d_{w2} = d_{wg}$

$$d_{w1} = d_{wk} = \frac{d_{wg}}{i}$$

Selected: d_{wg} = 224 mm

$$d_{wk} = \frac{224}{1.6} = 140 \text{ mm}$$

Selection of section

Figs. 8, 9, 10
Pages 33, 34

Selected: CONTI FO®-Z heavy-duty cogged raw edge V-belt
Section XPB

Centre distance

$a_{max} \leqq 2 \cdot (d_{wg} + d_{wk})$

$a_{min} \geqq 0{,}7 \cdot (d_{wg} + d_{wk})$

$a_{max} \leqq 2 \cdot (224 + 140) = 728$ mm

$a_{min} \geqq 0.7 \cdot (224 + 140) = 255$ mm

Selected: a = 500 mm

Pitch length

$$L_w \approx 2 \cdot a + \frac{\pi}{2}(d_{wg} + d_{wk}) + \frac{(d_{wg} - d_{wk})^2}{4 \cdot a}$$

$$L_w \approx 2 \cdot 500 + \frac{\pi}{2}(224 + 140) + \frac{(224 - 140)^2}{4 \cdot 500} \approx 1575 \text{ mm}$$

Pitch length available determined from table 4, page 14

$L_w = 1600$ mm

Centre distance

Determination in accordance with selected pitch length

$$a \approx \frac{1}{4} \cdot \left(L_b - \frac{d_{wg} + d_{wk}}{2} \cdot \pi\right) + \frac{1}{4} \cdot \sqrt{\left(L_b - \frac{d_{wg} - d_{wk}}{2} \cdot \pi\right)^2 - 2 \cdot (d_{wg} - d_{wk})^2}$$

$$a \approx \frac{1}{4} \cdot \left(1600 - \frac{224 + 140}{2} \cdot \pi\right) + \frac{1}{4} \cdot \sqrt{\left(1600 - \frac{224 + 140}{2} \cdot \pi\right)^2 - 2 \cdot (224 - 140)^2}$$

$a = 512.4$ mm

Arc of contact around small pulley

$$\beta = 2 \cdot \arccos\left(\frac{d_{wg} - d_{wk}}{2 \cdot a}\right)$$

$$\beta = 2 \cdot \arccos\left(\frac{224 - 140}{2 \cdot 512.4}\right) = 170.6°$$

Centre adjustments x and y

$$x = \frac{0.01 \cdot L_w}{\sin\frac{\beta}{2}}$$

$$x = \frac{0.01 \cdot 1600}{\sin\frac{170.6}{2}} = 16 \text{ mm}$$

$$y = \frac{0.005 \cdot L_w + \pi \cdot h \cdot \frac{\beta}{360}}{\sin\frac{\beta}{2}}$$

$$y = \frac{0.005 \cdot 1600 + \pi \cdot 13 \cdot \frac{170.6}{360}}{\sin\frac{170.6}{2}} = 27.5 \text{ mm}$$

h from table 3, page 11

Belt speed

$$v = \frac{\pi \cdot d_w \cdot n}{60 \cdot 10^3}$$

$$v = \frac{\pi \cdot 140 \cdot 2400}{60 \cdot 10^3} = 17.59 \text{ m/s}$$

Belt flex frequency

$$f_B = \frac{10^3 \cdot v \cdot k}{L_w}$$

$$f_B = \frac{10^3 \cdot 17.59 \cdot 2}{1600} = 22 \text{ s}^{-1}$$

Arc of contact factor

c_1 from table 12, page 32

$c_1 = 0.98$

Length correction factor

c_3 from table 27, page 48

$c_3 = 0.87$

Power rating

P_R from table 26, page 48

$P_R = 15.9$ kW

Nummer of V-belts required

$$z_{er} = \frac{P \cdot c_2}{P_R \cdot c_1 \cdot c_3}$$

$$z_{er} = \frac{50 \cdot 1.3}{15.9 \cdot 0.98 \cdot 0.87} = 4.8$$

Selected: 1 set CONTI FO®-Z heavy-duty cogged raw edge V-belts 5 · XPB 1600 L_w

Check on service factor

$$c_{2er} = z \cdot \frac{P_R \cdot c_1 \cdot c_3}{P}$$

$$c_{2er} = 5 \cdot \frac{15.9 \cdot 0.98 \cdot 0.87}{50} = 1.36$$

Effective pull

$$F_u = \frac{P \cdot 10^3}{v}$$

$$F_u = \frac{50 \cdot 10^3}{17.59} = 2842 \text{ N}$$

Axle load

$$F_v = (k_1 \cdot F_u + 2 \cdot z \cdot k_2 \cdot v^2) \cdot \sin \frac{\beta}{2}$$

$$F_v = (1.76 \cdot 2842 + 2 \cdot 5 \cdot 0.192 \cdot 17.59^2) \cdot \sin \frac{170.6}{2}$$

$$F_v = 5577 \text{ N}$$

$$F_{dyn} = k_1 \cdot F_u \cdot \sin \frac{\beta}{2}$$

$$F_{dyn} = 1.76 \cdot 2842 \cdot \sin \frac{170.6}{2} = 4985 \text{ N}$$

k_1 from table 11, page 38

$k_1 = 1.76$

k_2 from table 12, page 38

$k_2 = 0.192$

Control of belt tension

Calculated static belt tension

$$F = \frac{F_v}{2 \cdot z \cdot \sin \frac{\beta}{2}}$$

$$F = \frac{5577}{2 \cdot 5 \cdot \sin \frac{170,6}{2}} = 560 \text{ N}$$

Static belt tension from table 59, page 78

$F \approx 557$ N

Test force from fig. 14, page 42

$F_e = 75$ N

Read-off value from fig. 14, page 42

$$\frac{t_e}{L_f} \cdot 100$$

$$\frac{t_e}{L_f} \cdot 100 = 2.8$$

Free span length

$$L_f = a \cdot \sin \frac{\beta}{2}$$

$$L_f = 512.4 \cdot \sin \frac{170.6}{2} = 511 \text{ mm}$$

Deflection

$$t_e = \frac{L_f}{100} \cdot \text{read-of value}$$

$$t_e = \frac{511}{100} \cdot 2.85 \approx 14 \text{ mm}$$

With this deflection, the belt tension complies with the rated value calculated.

Example of calculation for V-flat drive

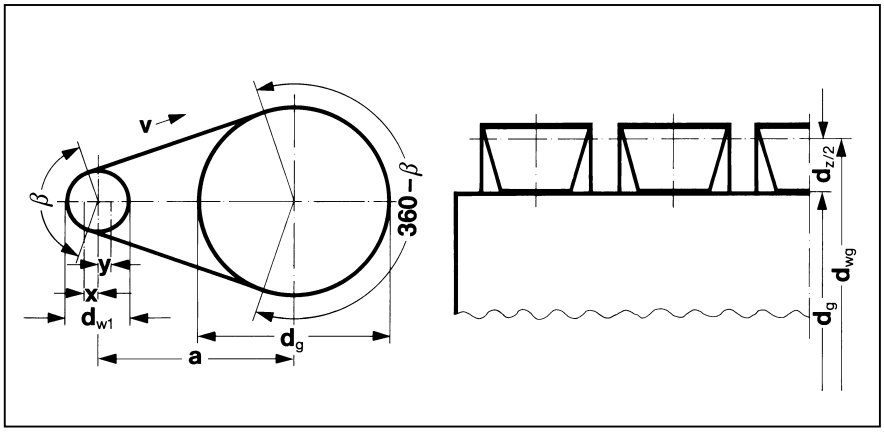

V-flat drive fig. 19

This type of drive is used especially when disk flywheels or flat belt pulleys already at hand are to be re-used and the production of large grooved pulleys is uneconomical.

CONTI MULTIFLEX® classical-section V-belts are suitable for V-flat drives.

The following prerequisites must be fulfilled to ensure the operating reliability of a V-flat drive:

– the small pulley must be a grooved pulley
– the transmission ratio must be $i \geqq 3$
– the recommended centre distance a:
  when $i \leqq 5$ $a = 1.2 \cdot (d_g - d_{wk})$,
  when $i > 5$ $a = d_g$
– the power rating is calculated in the usual way for the small pulley; the power transmission capacity at the large pulley must also be checked by referring to the tensioning capacity
– the tensioning capacity at the flat pulley must be $p_{Fu} < 2.8$ N/cm^2.

Example

Prime mover:	electric motor with high starting	P = 70 kW $n_1 = 1450$ min^{-1}
Driven machine:	eccentric press	$n_2 = 285$ min^{-1}
Service conditions:	evaluation via service factor c_2 daily operating period 10 hours	
	diameter of disk flywheel	$d_g = 1400$ mm

Service factor

c_2 from table 10, page 31

$c_2 = 1.2$

Transmission ratio

$$i = \frac{n_1}{n_2} = \frac{d_{w2}}{d_{w1}}$$

$$i = \frac{1450}{285} = 5.1$$

$d_{w2} = d_{wg} = d_g + d_z$

$d_{w2} = 1400 + 18 = 1418$ mm

d_z from table 56

$d_z = 18$ mm

Diameter addition d_z and bottom width of belt b_u

Table 56

CONTI MULTIFLEX® classical-section wrapped V-belts

Section		13/A	17/B	20/–	22/C	25/–	32/D	40/E
Diameter additional d_z	mm	10	13	16	18	20	23	25
Bottom with of belt b_u	mm	7.5	9.4	11.4	12.4	14.0	18.3	22.8

Selection of section

Diagram fig. 11, page 34

Selected: CONTI MULTIFLEX® classical-section wrapped V-belt
Section 22/C

Pitch diameter of pulleys

$$d_{w1} = \frac{d_{w2}}{i}$$

$$d_{w1} = \frac{1418}{5.1} = 278 \text{ mm}$$

Selected: $d_{w1} = 280$ mm

Centre distance

$a = 1{,}2 \cdot (d_{wg} - d_{wk})$ when $i \leqq 5$

$a = d_{wg}$ when $i > 5$

$a = 1418$ mm

Pitch length

$$L_w \approx 2 \cdot a + \frac{\pi}{2}(d_{wg} + d_{wk}) + \frac{(d_{wg} - d_{wk})^2}{4 \cdot a}$$

Pitch length available determined from table 63, page 57

$$L_w \approx 2 \cdot 1418 + \frac{\pi}{2}(280 + 1418) + \frac{(1418 - 280)^2}{4 \cdot 1418} \approx 5731 \text{ mm}$$

$L_w = 5652$ mm

Centre distance

Determination in accordance with selected pitch length

$$a = \frac{1}{4} \cdot \left(L_w - \frac{d_{wg} + d_{wk}}{2} \cdot \pi \right) + \frac{1}{4} \cdot \sqrt{\left(L_w - \frac{d_{wg} - d_{wk}}{2} \cdot \pi \right)^2 - 2 \cdot (d_{wg} - d_{wk})^2}$$

$$a = \frac{1}{4} \cdot \left(5652 - \frac{1418 + 280}{2} \cdot \pi \right) + \frac{1}{4} \cdot \sqrt{\left(5652 - \frac{1418 + 280}{2} \cdot \pi \right)^2 - 2 \cdot (1418 - 280)^2}$$

$a = 1374.6$ mm

Arc of contact around small pulley

$$\beta = 2 \cdot \arccos\left(\frac{d_{wg} - d_{wk}}{2 \cdot a} \right)$$

$$\beta = 2 \cdot \arccos\left(\frac{1418 - 280}{2 \cdot 1374.6} \right) = 131°$$

Centre adjustments x and y

$$x = \frac{0.015 \cdot L_w}{\sin\frac{\beta}{2}}$$

$$x = \frac{0.015 \cdot 5652}{\sin\frac{131}{2}} = 93 \text{ mm}$$

$$y = \frac{0.005 \cdot L_w + \pi \cdot h \cdot \frac{\beta}{360}}{\sin\frac{\beta}{2}}$$

$$y = \frac{0.005 \cdot 5652 + \pi \cdot 14 \cdot \frac{131}{360}}{\sin\frac{131}{2}} = 49 \text{ mm}$$

h from table 7, page 18

Belt speed

$$v = \frac{\pi \cdot d_w \cdot n}{60 \cdot 10^3}$$

$$v = \frac{\pi \cdot 280 \cdot 1450}{60 \cdot 10^3} = 21.26 \text{ m/s}$$

Belt flex frequency

$$f_B = \frac{10^3 \cdot v \cdot k}{L_w}$$

$$f_B = \frac{10^3 \cdot 21.26 \cdot 2}{5652} = 7.52 \text{ s}^{-1}$$

Arc of contact

c_1 from table 9, page 30

$c_1 = 0.86$

Length correction factor

c_3 from table 62, page 57

$c_3 = 1.08$

Power rating

P_R from table 61, page 57

$P_R = 18.3$ kW

Number of V-belts required

$$z = \frac{P \cdot c_2}{P_R \cdot c_1 \cdot c_3}$$

$$z = \frac{70 \cdot 1.2}{18.3 \cdot 0.86 \cdot 1.08} = 4.94$$

Selected: 1 Set CONTI MULTIFLEX® classical-section wrapped V-belts $5 \times 22/C \times 5600\ L_i$

Check on service factor

$$c_{2er} = z \cdot \frac{P_R \cdot c_1 \cdot c_3}{P}$$

$$c_{2er} = 5 \cdot \frac{18.3 \cdot 0.86 \cdot 1.08}{70} = 1.21$$

Effective pull

$$F_u = \frac{P \cdot 10^3}{v}$$

$$F_u = \frac{70 \cdot 10^3}{21.26} = 3293 \text{ N}$$

Contact surface on pulley

$$A = \frac{d_g \cdot \pi \cdot (360 - \beta) \cdot b_u \cdot z}{3{,}6 \cdot 10^4}$$

b_u from table 56, page 67

$$A = \frac{1400 \cdot \pi \cdot (360 - 131) \cdot 12{,}4 \cdot 5}{3{,}6 \cdot 10^4} = 1735 \text{ cm}^2$$

$b_u = 12.4$

Tensioning capacity

$$p_{Fu} = \frac{F_u}{A}$$

$$p_{Fu} = \frac{3293}{1735} = 1.9 \text{ N/cm}^2$$

The recommended tensioning capacity $p_{Fu} < 2.8 \text{ N/cm}^2$ is adhered to.

Axle load

$$F_v = (k_1 \cdot F_u + 2 \cdot z \cdot k_2 \cdot v^2) \cdot \sin\frac{\beta}{2}$$

$$F_v = (2.10 \cdot 3293 + 2 \cdot 5 \cdot 0.300 \cdot 21.26^2) \cdot \sin\frac{131}{2}$$

$F_v = 7530$ N

$$F_{dyn} = k_1 \cdot F_u \cdot \sin\frac{\beta}{2}$$

$$F_{dyn} = 2.10 \cdot 3293 \cdot \sin\frac{131}{2} = 6293 \text{ N}$$

k_1 from table 11, page 38

$k_1 = 2.10$

k_2 from table 12, page 38

$k_2 = 0.300$

Control of belt tension

Calculated static belt tension

$$F = \frac{F_v}{2 \cdot z \cdot \sin\frac{\beta}{2}}$$

$$F = \frac{7530}{2 \cdot 5 \cdot \sin\frac{131}{2}} = 827 \text{ N}$$

Test force from fig. 17, page 42

$F_e = 100$ N

Read-off value from fig. 17, page 42

$$\frac{t_e}{L_f} \cdot 100$$

$$\frac{t_e}{L_f} \cdot 100 = 3.4$$

free span length

$$L_f = a \cdot \sin\frac{\beta}{2}$$

$$L_f = 1374.6 \cdot \sin\frac{131}{2} = 1251 \text{ mm}$$

Deflection

$$t_e = \frac{L_f}{100} \cdot \text{read-off value}$$

$$t_e = \frac{1251}{100} \cdot 3.4 \approx 43 \text{ mm}$$

With this deflection, the belt tension complies with the rated value calculated.

ContiTech Computer Service

The ContiTech Computer Service can provide the technically and economically best solution for drive systems, even for those with extremely complex designs. Drive-related requirements are entered and the most suitable V-belt is shown within seconds.

The example below shows the computer printout for the design of a two pulley drive using data from the calculation example on page 63.

ContiTech Antriebssysteme GmbH
ContiTech Group

CONTITECH®

FO®-Z V-BELT DRIVE CALCULATION

25.03.1999 09:33:36

Customer : Sample Calculation	Company	:	ContiTech Antriebssysteme
Reference :	Telephone	:	
:	Fax	:	
:	Designer	:	

Belt Type:	**FO®-Z**			
Section:	**XPB**			
Pitch Diameter Of Small Pulley:	DWK	=	140,00	mm
Outside Diameter Of Small Pulley:	DAK	=	147,00	mm
Pitch Diameter Of Large Pulley:	DWG	=	224,00	mm
Outside Diameter Of Large Pulley:	DAG	=	231,00	mm
Speed Of Small Pulley:	NK	=	2400,00	rpm
Speed Of Large Pulley:	NG	=	1500,00	rpm
Drive Ratio:	I or 1/I	=	1,60	
Belt Pitch Length	LW	=	1600,00	mm
Calculated Centre Distance:	AER	=	512,39	mm
Arc of Contact:	BETA	=	170,60	degree
Take Up:	X	+	16,05	mm
Slack Off:	Y	-	27,45	mm
Belt Speed:	V	=	17,59	m/s
Belt Flex Frequency:	FB	=	21,99	Hz
Power To Be Transmitted:	P	=	50,00	kW
Given Service Factor:	C2	=	1,30	
Arc Of Contact Factor:	C1	=	0,98	
Belt Length Correction Factor:	C3	=	0,87	
Power Rating Per Belt:	PR	=	15,94	kW
Calculated Number Of Belts:	ZER	=	4,77	
Recommended Number Of Belts:	Z	=	5	
Calculated Service Factor:	C2ER	=	1,36	
Min. Pulley Face Width:	B2	=	101,00	mm
Belt Tension Factor:	K1	=	1,76	
Belt Rotational Force:	FU	=	2842,05	N
Static Tension Per Belt:	F	=	558,50	N
Static Axle Load:	FV	=	5566,26	N
Dynamic Axle Load:	FDYN	=	4973,99	N
Belt Tension Test Force:	FE	=	75	N
Belt Tension Test Deflection:	TE	=	14	mm
Natural Frequency Of Belt Span:	EIF	=	52,81	Hz
Service Life:	LH	>	25000	Hrs

Result:	
1 Set Of CONTI FO-Z® Heavy Duty V-Belts	**5 XPB 1600 Lw**
Small Pulley	**P5 XPB 140**
Large Pulley	**P5 XPB 224**

Computer printout for V-belt calculation Fig. 20

V-belt
length measurement



Matched length CONTI FO®-Z heavy-duty raw edge V-belts on a paper-cutting machine

V-belt length measurement

Precise measuring methods are specified in DIN 7753 Part 1 for narrow-section V-belts and in DIN 2215 for classical-section V-belts.

In the DIN method, the V-belt is laid over two equal-sized measuring pulleys (Fig.21) whose grooves are designed to correspond with the belt section. Details of groove types and dimensions are given in figs. 23 and 24 and in tables 57 and 58.

The movable measuring pulley is loaded in such a way that the measuring force (cf. Tables 57 and 58) acts on the V-belt. To ensure that the belt fits well into the pulley grooves, the measuring pulleys are rotated with the V-belt loaded until the belt has revolved at least three times. The centre distance "a" between the two pulleys is then measured.

The pitch length L_w is deduced from twice the centre distance "a" plus the pitch circumference U_w of measuring pulleys:

$$L_w = 2 \cdot a + U_w$$

The outside length L_a or the inside length L_i is calculated from the pitch length L_w and the length differential value Δ L (see Tables 57 and 58) that is fixed for each V-belt section.

A simple way of determining the length of a V-belt is to use a wall gauge. This comprises two semicircular V-belt supports, one of which can slide along a measuring scale. See Fig. 22.

As it is impossible to exert a precisely-defined measuring force, this method does not always give sufficiently accurate values.

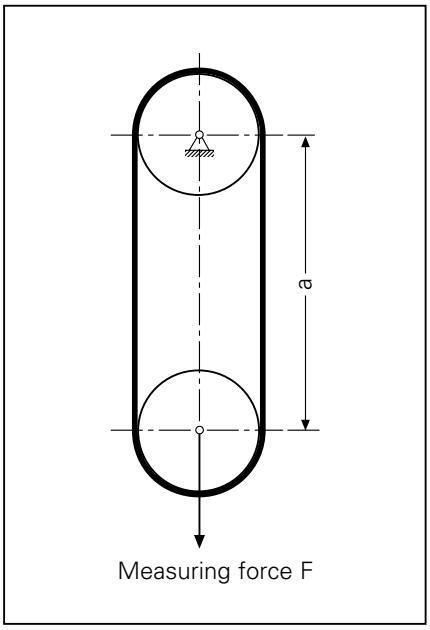

Measuring method Fig. 21



Wall gauge Fig. 22

Measuring pulleys and measuring force for CONTI FO®-Z heavy duty cogged raw edge V-belts and CONTI ULTRAFLEX® narrow-section wrapped V-belts to DIN Standard 7753 part 1 and B.S. 3790

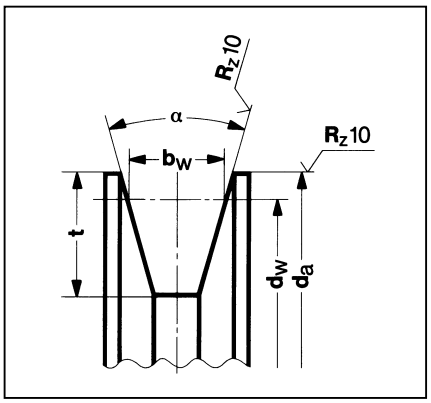

Measuring pulley Fig. 23

Measuring pulleys and measuring force

Table 57

Belt section	B.S./DIN symbol	XPZ/SPZ	XPA/SPA	XPB/SPB	XPC/SPC
Pitch circumference U_w	mm	300	450	600	1000
Pitch Diameter $d_w \pm 0.05$	mm	95.49	143.24	190.99	318.31
Outside diameter $d_a \pm 0.05$	mm	100	149	198	328
Pitch width b_w	mm	8.5	11.0	14.0	19.0
Groove-included angle $\alpha \pm 10'$	°(degrees)	36	36	36	36
Groove depth t_{min}	mm	11	14	17	24
Measuring force F	N	360	560	900	1500
Length differential value from L_w $\Delta L = L_a - L_w$	mm	13	18	22	30

Measuring pulleys and measuring force for CONTI FO®-Z heavy duty cogged raw edge V-belts and CONTI MULTIFLEX® classical-section wrapped V-belts to DIN Standard 2215 part 1 and B.S. 3790

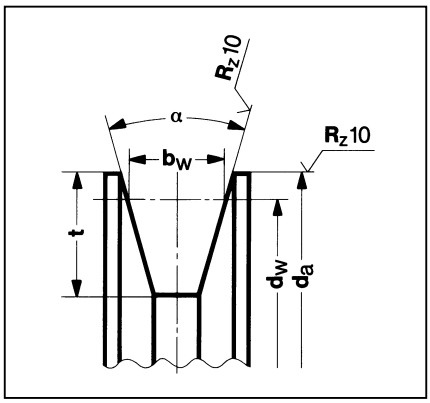

Measuring pulley Fig. 24

Measuring pulleys and measuring force

Table 58

Belt section	DIN symbol B.S./ISO symbol	5 –	6 Y	8 –	10 Z	13 A	17 B	20 –	22 C	25 –	32 D	40 E
Pitch circumference U_w	mm	70	90	140	180	300	400	520	700	800	1200	1800
Pitch diameter $d_w \pm 0.05$	mm	22.28	28.65	44.56	57.30	95.50	127.32	165.52	222.82	254.65	381.98	572.96
Outside diameter $d_a \pm 0.05$	mm	24.88	31.85	44.56	62.30	102.10	135.72	175.12	234.22	267.25	398.18	596.96
Pitch width b_w Groove included	mm	4.2	5.3	6.7	8.5	11.0	14.0	17.0	19.0	21.0	27.0	32.0
angle $\alpha \pm 10'$	° (degrees)	32	32	32	34	34	34	34	34	34	36	36
Groove depth t_{min}	mm	5	6	8	10	12	15	18	20	22	28	36
Measuring force F	N	29	39	78	108	196	294	735	735	735	1373	1765
Length differential value from L_i $\Delta L = L_w - L_i$	mm	11	15	19	22	30	43	48	52	61	75	82

Installation, maintenance and storage of V-belts

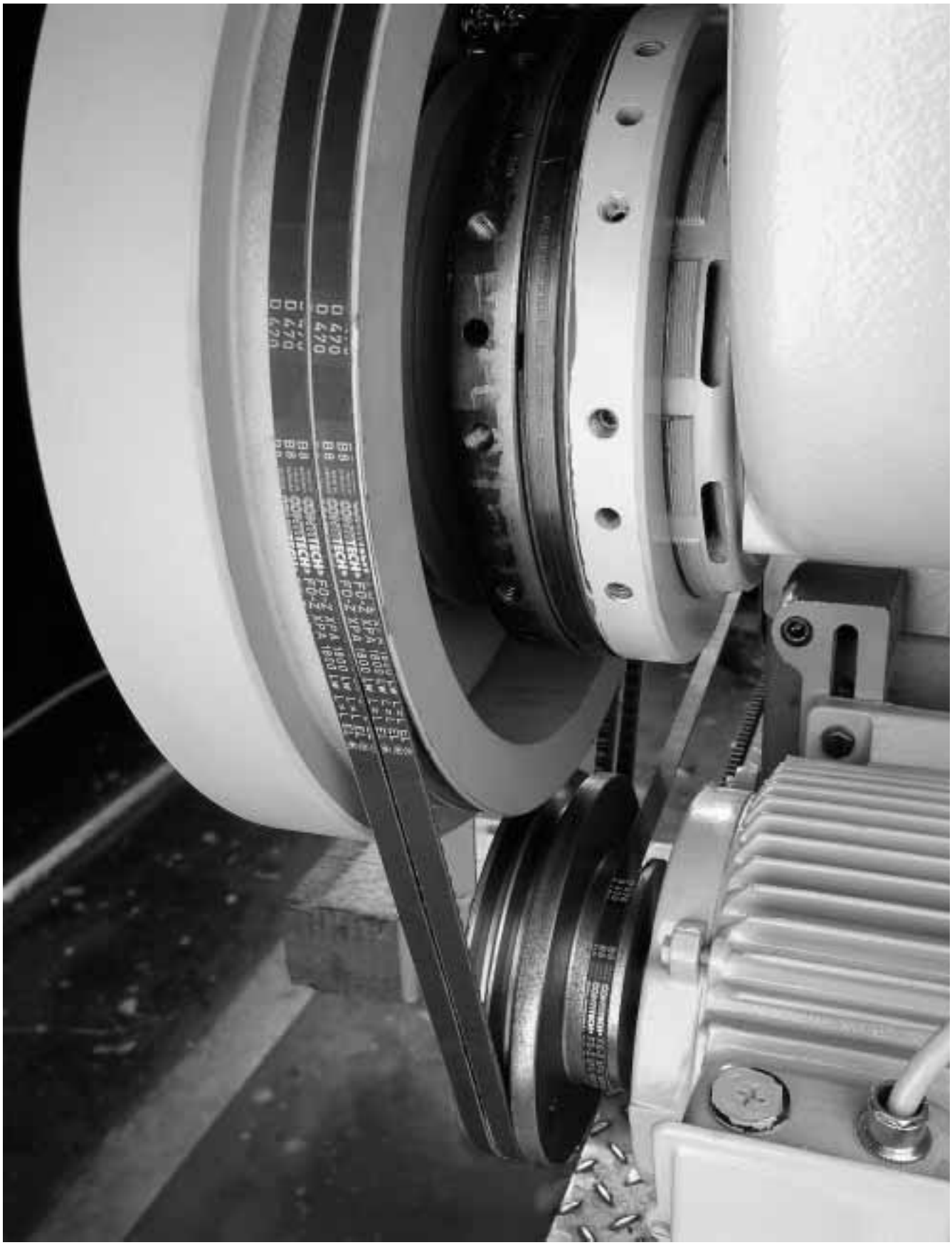

Matched-length CONTI FO®-Z heavy-duty cogged raw edge V-belts on a paper cutting machine

Installation, maintenance and storage of V-belts

CONTI® V-belts ensure a long service life and a high standard of operating reliability if the following conditions are observed:

– correct drive design according to belt section, number of belts used and belt type

– correct installation, maintenance and storage of the belts.

Installation and maintenance of V-belts.

The ten points listed below are designed to ensure optimum utilization of ContiTech V-belts in practical application:

1. The pulleys used must comply with the data in the chapter on "Pulleys". Incorrectly selected pulleys or belt sections result in inefficient drives.
2. The pulleys must be correctly aligned. Incorrect alignment causes twisting of V-belts, severe edge abrasion and excessive noise.
3. The pulleys must be free from burr, rust and dirt. Soiled pulleys lead to premature belt damage.
4. V-belts must be mounted by hand; the centre distance is reduced accordingly for this purpose. Prying belts over flanges by force or with assembly tools may result in indiscernible damage to the tension member and to the fabric jacket with a consequent reduction in service life.
5. V-belt drives must be tensioned with great care. Insufficient belt tension leads to inadequate power transmission and premature wear due to excessive slip. Over tensioning causes excessive elongation, unnecessary flexing combined with high temperatures and thus a reduction in service life.
   The shaft bearings are also subjected to excessive strain.
   Calculation and control of V-belt tension for new constructions are detailed on page 41. For existing drives, the static belt tension is shown in tables 59 and 60. In practice the belt tension can be set and controlled by means of the ContiTech V-belt tension gauge (cf. page 41).
   The correct belt tension can also be determined from figs. 14 to 17. Fig. 27 facilitates determination of belt speed. The data required for control of belt tension can be entered on a label that can be affixed to the drive for ready reference (Fig. 25).
6. After a brief running in phase of some 20 minutes, the tension must be checked and, if necessary, the belt tightened. Incorrectly tensioned V-belts are subject to premature wear and tear.
7. Multi-groove drives must be fitted with V-belts of equal length. Matched-length V-belts made by ContiTech ensure easy grouping together in sets. If a single V-belt fails, the entire set needs to be replaced. New and part-used belts will not function together in one set because of their differing amounts of stretch.
8. Tensioning pulleys designed to compensate for belt elongation must function from the inside; their diameters should not be below the minimum permissible pulley diameter. Tensioning pulleys functioning from the outside and excessively small diameters increase flexing strain and reduce service life.

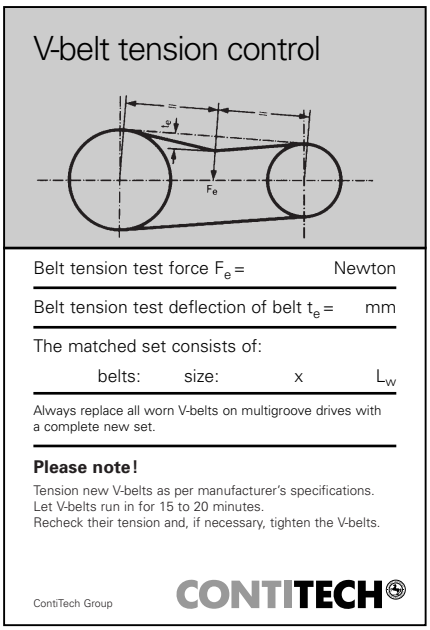

Adhesive label V-belt tension control Fig. 26

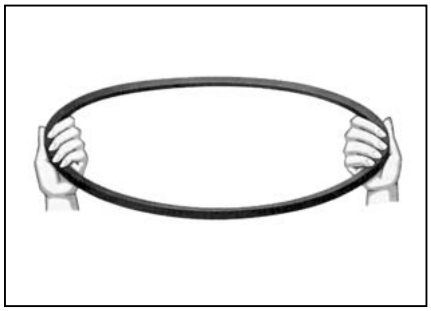

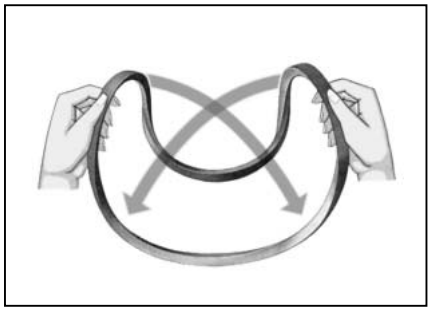

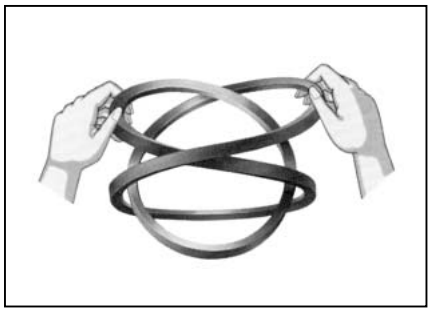



Coiling long V-belts Fig. 26

9. The use of belt dressings is superfluous. The efficiency of the drive is ensured by correct belt tensioning.
10. V-belts must be protected from any oil and other chemicals. Constant exposure to such agents results in swelling or in other premature damage to the belt.

If the above principles are observed, CONTI® V-belts require no further maintenance.

Storage of V-belts

Standard practice for storage, cleaning and maintenance of rubber products is detailed in DIN standard 7716.

Storage method
V-belts can be efficiently stored by suspending them on "saddles" or tubular brackets with a arge diameter. The diameter should be at least 10 x height of belt cross-section.

Long V-belts can be stacked to save space, provided that they are correctly coiled (Fig. 26).

Shorter V-belts can be stored on shelves. Stacks should not be more than 300 mm high, as the bottom belts may otherwise be deformed.

V-belts for precision engineering can best be stored on reels.

Hooks and nails are unsuitable for suspending V-belts for storage purposes.

Storage premises
The storage premises should be cool, dry and well ventilated but not draughty.

The temperature should be kept at between 15 and 25 °C.

V-belts must not be stored near sources of heat.

Keep V-belts away from direct sunlight and strong artificial light with a high ultraviolet content.

Equipment generating ozone, e.g. sparking electrical switchgear, should not be operated constantly in storage premises.

Inflammable materials, lubricants, acids and other aggressive materials should not be kept in V-belt storage premises. Elastomers and fabrics may be affected or even irreparably damaged by such agents.

Cleaning
Soiled V-belts can be cleaned with a glycerine/spirit mixture (1:10). Solvents such as petro or benzene must not be used. Sharp-edged objects must not be used for cleaning V-belts.

Static belt tension F (N) for a V-belt as a function of belt speed v and power P

Effective pull as a component of power to be transmitted P/z (kW) for a V-belt

Table 59

$\frac{P}{z}$ (kW)	Belt speed v (m/s)																								
	4	6	8	10	12	14	16	18	20	22	24	26	28	30	32	34	36	38	40	42	44	46	48	50
0.2	43	29	21	17	14	12	10	9	8	7	7	6	6	5	5	5	4	4	4	4	3	3	3	3
0.4	87	58	43	34	29	24	21	19	17	15	14	13	12	11	10	10	9	9	8	8	7	7	7	6
0.6	131	87	65	52	43	37	32	29	26	23	21	20	18	17	16	15	14	13	13	12	11	11	10	10
0.8	174	116	87	69	58	49	43	38	34	31	29	26	24	23	21	20	19	18	17	16	15	15	14	13
1.0	218	145	109	87	72	62	54	48	43	39	36	33	31	29	27	25	24	23	21	20	19	19	18	17
1.2	262	174	131	104	87	74	65	58	52	47	43	40	37	34	32	30	29	27	26	24	23	22	21	20
1.4	306	204	153	122	102	87	76	68	61	55	51	47	43	40	38	36	34	32	30	29	27	26	25	24
1.6	349	233	174	139	116	99	87	77	69	63	58	53	49	46	43	41	38	36	34	33	31	30	29	27
1.8	393	262	196	157	131	112	98	87	78	71	65	60	56	52	49	46	43	41	39	37	35	34	32	31
2.0	437	291	218	175	145	125	109	97	87	79	72	67	62	58	54	51	48	46	43	41	39	38	36	35
2.2	481	320	240	192	160	137	120	106	96	87	80	74	68	64	60	56	53	50	48	45	43	41	40	38
2.4	524	349	262	209	174	149	131	116	104	95	87	80	74	69	65	61	58	55	52	49	47	45	43	41
2.6	568	379	284	227	189	162	142	126	113	103	94	87	81	75	71	66	63	59	56	54	51	49	47	45
2.8	612	408	306	244	204	174	153	136	122	111	102	94	87	81	76	72	68	64	61	58	55	53	51	48
3.0	656	437	328	262	218	187	164	145	131	119	109	100	93	87	82	77	72	69	65	62	59	57	54	52
3.2	699	466	349	279	233	199	174	155	139	127	116	107	99	93	87	82	77	73	69	66	63	60	58	55
3.4	743	495	371	297	247	212	185	165	148	135	123	114	106	99	92	87	82	78	74	70	67	64	61	59
3.6	787	524	393	314	262	224	196	174	157	143	131	121	112	104	98	92	87	82	78	74	71	68	65	62
3.8	831	554	415	332	277	237	207	184	166	151	138	127	118	110	103	97	92	87	83	79	75	72	69	66
4.0	875	583	437	350	291	250	218	194	175	159	145	134	125	116	109	102	97	92	87	83	79	76	72	70
4.2	918	612	459	367	306	262	229	204	183	167	153	141	131	122	114	108	102	96	91	87	83	79	76	73
4.4	962	641	481	384	320	274	240	213	192	174	160	148	137	128	120	113	106	101	96	91	87	83	80	76
4.6	1006	670	503	402	335	287	251	223	201	182	167	154	143	134	125	118	111	105	100	95	91	87	83	80
4.8	1049	699	524	419	349	299	262	233	209	190	174	161	149	139	131	123	116	110	104	99	95	91	87	83
5.0	1093	729	546	437	364	312	273	243	218	198	182	168	156	145	136	128	121	115	109	104	99	95	91	87
6.0	1312	875	656	525	437	375	328	291	262	238	218	201	187	175	164	154	145	138	131	125	119	114	109	105
7.0	1531	1020	765	612	510	437	382	340	306	278	255	235	218	204	191	180	170	161	153	145	139	133	127	122
8.0	1750	1166	875	700	583	500	437	388	350	318	291	269	250	233	218	205	194	184	175	166	159	152	145	140
9.0	1968	1312	984	787	656	562	492	437	393	357	328	302	281	262	246	231	218	207	196	187	178	171	164	157
10.0	2187	1458	1093	875	729	625	546	486	437	397	364	336	312	291	273	257	243	230	218	208	198	190	182	175
12.0	2625	1750	1312	1050	875	750	656	583	525	477	437	403	375	350	328	308	291	276	262	250	238	228	218	210
14.0	3062	2041	1531	1225	1020	875	765	680	612	556	510	471	437	408	382	360	340	322	306	291	278	266	255	245
16.0	3500	2333	1750	1400	1166	1000	875	777	700	636	583	538	580	466	437	411	388	368	350	333	318	304	291	280
18.0	3937	2625	1968	1575	1312	1125	984	875	787	715	656	605	562	525	492	463	437	414	393	375	357	342	328	315
20.0	4375	2916	2187	1750	1458	1250	1093	972	875	795	729	673	625	583	546	514	486	460	437	416	397	380	364	350
22.0	4812	3208	2406	1925	1604	1375	1203	1069	962	875	802	740	687	641	601	566	534	506	481	458	437	418	401	385
24.0	5250	3500	2625	2100	1750	1500	1312	1166	1050	954	875	807	750	700	656	617	583	552	525	500	477	456	437	420
26.0	5687	3791	2843	2275	1895	1625	1421	1263	1137	1034	947	875	812	758	710	669	631	598	568	541	517	494	473	455
28.0	6125	4083	3062	2450	2041	1750	1531	1361	1225	1113	1020	942	875	816	765	720	680	644	612	383	556	532	510	490
30.0	6562	4375	3281	2625	2187	1875	1640	1458	1312	1193	1093	1009	937	875	820	772	729	690	656	625	596	570	546	525
32.0	7000	4666	3500	2800	2333	2000	1750	1555	1400	1272	1166	1076	1000	933	875	823	777	736	700	666	636	608	583	560
34.0	7437	4958	3718	2975	2479	2125	1859	1652	1487	1352	1239	1144	1062	991	929	875	82b	786	743	708	676	646	619	595
36.0	7875	5250	3937	3150	2625	2250	1968	1750	1575	1431	1312	1211	1125	1050	984	926	875	828	787	750	715	684	656	630
38.0	8312	5541	4156	3325	2770	2375	2078	1847	1662	1511	1385	1278	1187	1108	1039	977	923	875	831	791	755	722	692	665
40.0	8750	5833	4375	3500	2916	2500	2187	1944	1750	1590	1458	1346	1250	1166	1093	1029	972	921	875	833	795	760	729	700
42.0	9187	6125	4593	3675	3062	2625	2296	2041	1837	1670	1531	1413	1312	1225	1148	1080	1020	967	918	875	835	798	765	735
44.0	9625	6416	4812	3850	3208	2750	2406	2138	1925	1750	1604	1480	1375	1283	1203	1132	1069	1013	962	916	875	836	802	770
46.0	10062	6708	5031	4025	3354	2875	2515	2236	2012	1829	1677	1548	1437	1341	1257	1183	1118	1059	1006	958	914	875	838	805
48.0	10500	7000	5250	4200	3500	3000	2625	2333	2100	1909	1750	1615	1500	1400	1312	1235	1166	1105	1050	1000	954	913	875	840
50.0	10937	7291	5468	4375	3645	3125	2734	2430	2187	1988	1822	1682	1562	1458	1367	1286	1215	1151	1093	1041	994	951	911	875

52,0	11375	7583	5687	4550	3791	3250	2843	2527	2275	2068	1895	1750	1625	1516	1421	1338	1263	1197	1137	1083	1034	989	947	910
54,0	11812	7875	5906	4725	3937	3375	2953	2625	2362	2147	1968	1817	1687	1575	1476	1389	1312	1243	1181	1125	1073	1027	984	945
56,0	12250	8166	6125	4900	4083	3500	3062	2722	2450	2227	2041	1884	1750	1633	1531	1441	1361	1289	1225	1166	1113	1065	1020	980
58,0	12687	8458	6343	5075	4229	3625	3171	2819	2537	2306	2114	1951	1812	1691	1585	1492	1409	1335	1268	1208	1153	1103	1057	1015
60,0	13125	8750	6562	5250	4375	3750	3281	2916	2625	2386	2187	2019	1875	1750	1640	1544	1458	1381	1312	1250	1193	1141	1093	1050
62,0	13562	9041	6781	5425	4520	3875	3390	3013	2712	2465	2260	2086	1937	1808	1695	1595	1506	1427	1356	1291	1232	1179	1130	1085
64,0	14000	9333	7000	5600	4666	4000	3500	3111	2800	2545	2333	2153	2000	1866	1750	1647	1555	1473	1400	1333	1272	1217	1166	1120
66,0	14437	9625	7218	5775	4812	4125	3609	3208	2887	2625	2406	2221	2062	1925	1804	1698	1604	1519	1443	1375	1312	1255	1203	1155
68,0	14875	9916	7437	5950	4958	4250	3718	3305	2975	2704	2479	2288	2125	1983	1859	1750	1652	1565	1487	1416	1352	1293	1239	1190
70,0	15312	10208	7656	6125	5104	4375	3828	3402	3062	2784	2552	2355	2187	2041	1914	1801	1701	1611	1531	1458	1392	1331	1276	1225
72,0	15750	10500	7875	6300	5250	4500	3937	3500	3150	2863	2625	2423	2250	2100	1968	1852	1750	1657	1575	1500	1431	1369	1312	1260
74,0	16187	10791	8093	6475	5395	4625	4046	3597	3237	2943	2697	2490	2312	2158	2023	1904	1798	1703	1618	1541	1471	1407	1348	1295

Centrifugal component in static belt tension value F (N) for a V-belt

Table 60

CONTI FO®-Z heavy-duty cogged raw edge V-belts

5/–	0	1	1	2	2	3	4	5	6	7	9	10	12	14	15	17	19	22	24	26	29	32	35	38
6/Y	0	1	1	2	3	5	6	7	9	11	13	16	18	21	24	27	30	33	37	41	45	49	53	58
8/–	1	1	3	4	6	8	10	13	16	20	24	28	32	37	42	47	53	59	66	72	79	87	94	103
XPZ	1	3	5	7	10	14	18	23	29	35	41	49	56	65	74	83	93	104	115	127	139	152	166	180
XPA	2	4	7	11	16	22	29	36	45	54	65	76	88	101	115	129	145	162	179	198	217	237	258	280
XPB	3	7	12	19	28	38	49	62	77	93	111	130	151	173	197	222	249	277	307	339	372	406	442	480
XPC	6	13	24	37	53	73	95	120	148	179	213	250	290	333	379	428	480	534	592	653	716	783	852	925

CONTI ULTRAFLEX® narrow-section wrapped V-belts

SPZ	1	3	5	7	11	14	19	24	29	35	42	49	57	66	75	84	95	105	117
SPA	2	4	6	10	14	20	26	32	40	48	58	68	78	90	102	116	130	144	160
SPB	3	6	11	18	26	35	46	58	71	86	103	120	140	160	182	206	231	257	285
SPC	6	14	24	38	55	74	97	123	152	184	219	257	298	342	389	493	492	549	608

CONTI MULTIFLEX® classical-section wrapped V-belts

8/–	1	1	3	4	6	8	10	13	16	19	23	27	31	36
10/Z	1	2	4	6	9	12	15	19	24	29	35	41	47	54
13/A	2	4	7	11	15	21	27	34	42	51	60	71	82	94
17/B	3	6	11	17	24	33	44	55	68	82	98	115	133	153
20/–	4	9	15	24	35	47	61	78	96	116	138	162	188	216
22/C	5	11	19	30	43	59	77	97	120	145	173	203	235	270
25/–	7	15	28	43	62	84	110	139	172	208	248	291	337	387
32/D	10	23	40	63	91	123	161	204	252	305	363	426	494	567
40/E	16	35	62	97	140	190	248	314	388	469	559	656	760	873

Tables 59 and 60:
Instructions for use.

1. Determine effective pull component from belt speed and power to be transmitted (table 59)
2. Determine zentrifugal force component according to belt speed and to type and section of V-belt (table 60)
3. Calculate static belt tension F by adding together effektive pull component (value in table 59) and zentrifugal force component (value in table 60).

Value in table 59																								
Value in table 60																								
∑ = F																								

Belt speed v (m/s) as a function of pulley speed $n_{1, 2}$ and pulley diameter $d_{w1, 2}$

Fig. 27

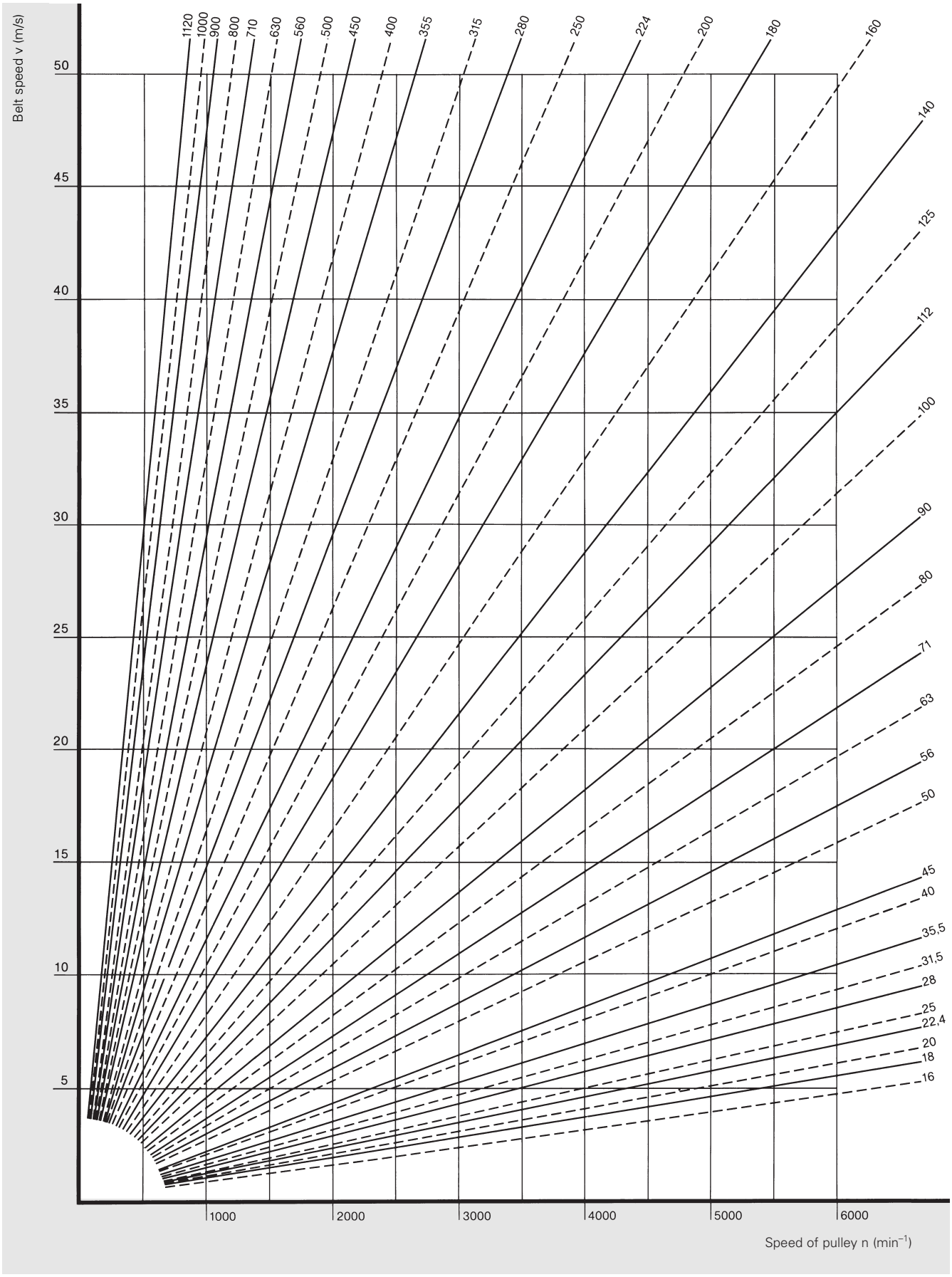

Standard specifications

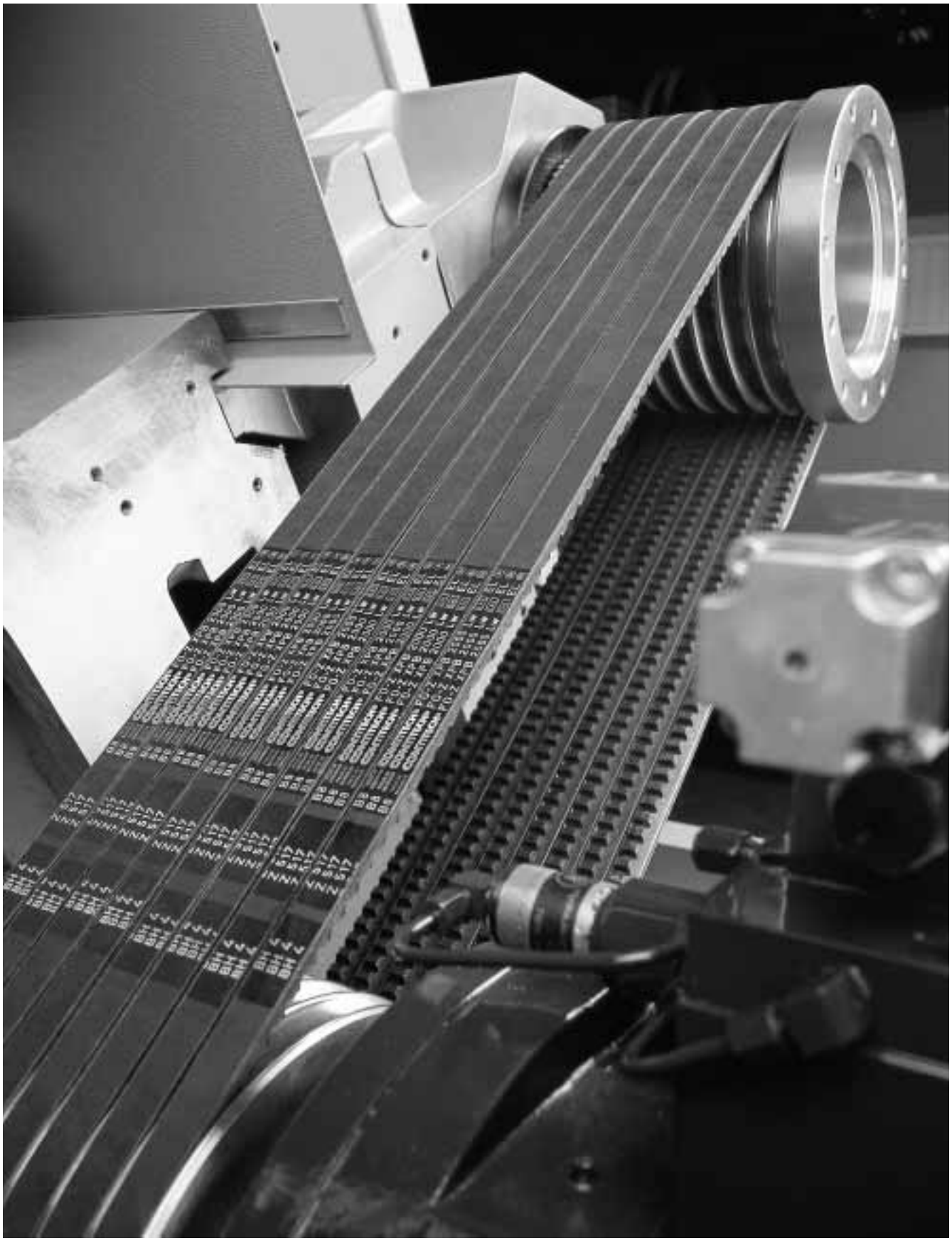

Matched-length CONTI FO®-Z heavy-duty cogged raw edge V-belts on a lathe

Standard specifications

Germany

DIN 109	Part 1	Driving Elements; Circumferential Speeds
	Part 2	Driving Elements; Centre Distances for V-belt Drives
DIN 2211	Part 1	Driving Elements; Grooved Pulleys for Narrow V-belts; dimensions; material
	Part 2	Driving Elements; Grooved Pulleys for Narrow V-belts; verification
DIN 2215		Endless V-belts; Dimensions
DIN 2217	Part 1	Driving Elements; V-belt Pulleys; Dimensions, Material
	Part 2	Driving Elements; Grooved Pulleys for V-belts; Testing of Grooves
DIN 2218		Endless V-belts for Mechanical Engineering; Calculation of Drives, Power Ratings
DIN 7719	Part 1	Endless broad-section V-belts for industrial variable speed gears; belts and groove profiles of corresponding pulleys
	Part 2	Endless broad-section V-belts for industrial variable speed gears; measurement of variations in centre distance
DIN 7721	Part 1	Synchronous belt drives; metric pitch; synchronous belts
	Part 2	Synchronous belt drives; metric pitch; tooth space profile of synchronous pulleys
DIN 7753	Part 1	Endless Narrow V-belts for industrial Purposes; Dimensions
	Part 3	Endless Narrow V-belts for the Automotive Industry; Dimensions
	Part 4	Endless Narrow V-belts for the Automotive Industry; Fatigue test
DIN 7867		Multiple V-ribbed belts and pulleys
DIN ISO 5294		Synchronous belt drives; pulleys
DIN ISO 5296		Synchronous belt drives; Belts

ISO – International Organization for Standardization

ISO 155	Transmission pulleys; Limiting values for adjustment of centres
ISO 254	Quality, finish and balance of transmission pulleys
ISO 1081	Drives using V-belts and grooved pulleys; Terminology
ISO 1604	Endless wide V-belts for industrial speed-changers and groove profiles for corresponding pulleys
ISO 1813	Antistatic endless V-belts; Electrical conductivity; Characteristic and method of test
ISO 2790	Narrow V-belt drives for the automotive industry; Dimensions

ISO 3410 — Agricultural machinery; Endless variable-speed V-belts and groove sections of corresponding pulleys

ISO 4183 — Grooved pulleys for classical and narrow V-belts

ISO 4184 — Classical and narrow V-belts; Lengths

ISO 5287 — Narrow V-belt drives for the automotive industry; Fatigue test

ISO 5292 — Industrial V-belt drives; Calculation of power ratings

ISO 5294 — Synchronous belt drives; Pulleys

ISO 5295 — Synchronous belts; Calculation of power rating and drive centre distance

ISO 5296 — Synchronous belt drives; Belts

ISO 8370 — V-belts and multiple V-ribbed belts; determination of the pitch zone

ISO 9010 — Synchronous belt drives; automotive belts

ISO 9011 — Synchronous belt drives; automotive pulleys

ISO 9563 — Electrical conductivity of antistatic synchronous belts; characteristic and method of test

ISO 9608 — Uniformity of V-belts; measurement and limiting values of variations in centre distance

ISO 9980 — V-belt pulleys; geometric testing of grooves

ISO 9981 — Multiple V-ribbed belts and pulleys for the automotive industry; dimensions ot PK section

ISO 9982 — Multiple V-ribbed belts and pulleys for industrial applications; dimensions of PH to PM sections

France

NF T 47-104 — Endless antistatic V-belts; Electrical conductivity; Specifications and methods of test

NF T 47-106 — Classical endless V-belts and corresponding grooved pulleys

NF T 47-117 — Endless narrow V-belts and V-belt pulleys for sections SPZ, SPA and SPB

NF T 47-128 — Endless wide V-belts for industrial speed changers and groove profiles for corresponding pulleys

NF T 47-129 — Endless narrow V-belts (SPC sections) and corresponding pulleys

NF R 15-504 — Endless narrow V-belts for the automotive industry; geometrical characteristics for sections SPZ and SPA

NF R 15-505 — Endless narrow V-belts for the automotive industry; mechanical characteristics for sections SPZ and SPA

Great Britain

BS 3733 — Endless V-belt drives for agricultural purposes

BS 3790 — Specification for endless wedge belt drives and endless V-belt drives

BS AU 150 — Automotive V-belt drives

A

Abrasion resistant — 7
Abrasion resistance — 7
Acids — 75
Aclual length — 6
Additives — 7
Adhesive labels — 74
Ambient temperature — 7, 12
Angle of side inclination — 29
Anti static properties — 7, 8, 13, 16, 19
API certificate — 7, 8
Arc of contact — 35
Arc of contact factor — 30
Assembly tools — 74
ASTM oils — 7

B

Base rubber — 7, 12
Base, V-belts — 7, 12
Belt dressings — 75
  flex frequency — 36
  height — 11, 15, 18
  length — 10, 70
  sections — 10, 11, 15, 18
  section, selection of — 32
  speed — 36, 78
  tension — 37 74
  tension, excessive — 37, 74
  tension factor — 37, 38
  tension gauge — 39, 74
  tension insufficient — 37, 74
  width, bottom — 15, 18, 65
  width, top — 11, 15, 18
Bending stress — 12
Benzene — 75
BS — 81

C

Cable cord tension member — 16, 19
Calculation, example of — 61, 64
Centre ad justment — 36
  distance — 35, 36, 61, 65, 70
Centrifugal force factor — 38
  force component — 77
Classical-section V-belts — 4, 18
Cleaning V-belts — 75
Cogs — 12
Compact drives — 12
Computer printout — 68
  program — 10, 28, 68
Coiling long V-belts — 75
Construction — 6
Contact surface on pulley — 67
ContiTech computer service — 68
Control of belt tension — 39, 74
Control-flexing — 9, 16, 19
Cross flexing — 37
Cushion compound — 12

D

Damp heat atmosphere — 7
Deflection — 40, 63, 67
Deep-groove pulleys — 23, 26
Designation — 10
Design data — 30–60
Diameter allowance — 65
Dimension data — 10, 11, 15, 18
DIN — 80
Disk flywheel — 64
Douple V-be ts — 5
Drive calculation — 10, 28
  data — 68
Drives
  multigroove — 6, 74
  oscillating — 23
  twisted — 23
Dust, effective — 7

E

Earthing — 7
Edge abrasion — 74
Effective pu 1 — 28, 37, 66
EL (anti-static) — 8, 13, 16, 19
Elastomer/fibre compound — 12
Electrical resistance — 8
Elongation — 12, 74
Explosion hazard — 8

F

Fabric jacket — 7, 16, 19, 74
Factory test certificate — 8
Flexibility — 7
Flexing cycles — 7
  properties — 11, 12
  strain — 75
  stress — 37, 74
FO®-Z — 4, 11

G

Gas and dust/air mixtures — 8
Grease — 7
Grinding belt edges — 9, 12
Groove depth — 24, 25, 71
  depth increased — 26
  included angle — 22, 24, 25, 26, 71
  section — 22
  spacing — 24–26
  width — 24, 25
  width increased — 26
Grooves, number of — 24–26

H

Hardening — 7
Heat built-up — 12
Heavy-duty V-belts — 4, 11
Hydrocarbons — 7

I

Increased groove depth — 26
Insensitivity to tropical climates — 7
Inside length — 10, 70
ISO — 80
Installation — 74
Installing V-belts — 74

L

Leakage resistors — 8
Length available — 10, 41–60
  correction — 31, 41–60
  designation — 10
  difference — 6
  difference value — 11, 15, 18
  stability — 12
  tolerance — 6, 70
Lengths — 10
LOBA approval — 8, 9
LR (extra smooth-running) — 8, 13, 16, 19
Lubricants — 75

M

Maintenance — 74
Matched sets — 6, 16, 19, 74
Matcned set compilation — 74
  set tolerance — 6
Measuring equipment — 39, 74
  force — 70
  method — 70
  sheaves — 70
  the belt length — 70
Mining — 8
Moderate resistance to oil — 7
Moduli of elasticity — 15
MONTAN — 8, 16, 19
Moulded toothing — 9, 12
MULTIFLEX® — 4, 18
Multi-ply tension member — 16, 19

N

Narrow-section V-belts — 4, 15
NFR — 81
NFT — 81
Number of V-belts — 36

O

Oil, effect of — 75
  resistance — 64
Outside diameter — 64
Ozone — 75

P

Petrol — 75
Pitch circumference — 70
  diameter — 35
  height — 11, 15, 18
  length — 35, 70
  width — 11, 15, 18
Polychloroprene — 12
Polyester cord — 12
Power rating — 10, 41, 60
  transmission capacity — 12, 32
Product range — 5, 10
Product survey — 4
Properties — 6
  standard — 7
Pulley direction
  face width — 24, 25, 26
  diameter — 22
  diameter minimum — 11, 15, 18, 22
Pulleys — 10, 22, 74
  balanced — 22
  dimension for — 23–26

R

Rating length — 6
Raw edge — 11
Raw edge V-belts — 4, 11
Reference circumference — 70
  length — 70
Resistance to oil — 7
Rim, types of — 23–26
Running porperties — 12
Running phase — 12
Rust — 74

S

S (increased thermal stability) — 10
"Saddles" — 75
Service factor — 31
Shaft bearings — 37, 74
Shafts, vertica — 23
Slip/Power properties — 12
Soiled V-belts — 75
Soiling — 7, 74
Span length, free — 63, 67
Special-doty types — 8
Speed — 36, 78
Stacking — 75
Standard lengths — 10
  specifications — 80
Steel tape measure — 70
Storage — 74, 75
  premises — 75
Sunlight, direct — 75
Swelling — 7, 75
Symbols — 28

T

Temperature in storage premises — 75
  premises range — 7
Tension capacity — 64, 65
  member — 9, 11, 74
  position of — 9
  reinforced — 10, 16, 19
Tensioning pulleys — 75
Test force — 40, 63, 67
Tightening — 74
Tolerance groups — 6
Top width: height ratio — 12, 16, 19
Total belt tension — 37, 63
Transmission ratio — 35, 61, 64
Transverse rigidity — 11, 12
Two-pulley-drives — 61

U

ULTRAFLEX® — 4, 15
Units — 28

V

V-belts for transport and special duty purposes — 10
VF — 10, 16, 19
V-flat drive — 19, 22, 64

W

Weigth per metre — 11, 15, 18

ContiTech Antriebssysteme GmbH
Postfach 445, D-30004 Hannover
Philipsbornstraße 1, D-30165 Hannover
Phone + 49 (0) 511 / 9 38-71
Fax + 49 (0) 511 / 9 38-52 37
E-Mail: industrie.as@antriebssysteme.contitech.de
www.contitech.de/antriebssysteme

ContiTech Antriebssysteme GmbH
Continentalstraße 1, D-29451 Dannenberg
Phone +49 (0) 58 61 / 8 06-0
Fax + 49 (0) 58 61 / 8 06-302
E-Mail: dannenberg@antriebssysteme.contitech.de

The contents of this publication are the result of many years of research and experience gained in application technology. All information is given in good faith; it does not represent a guarentee with respect to characteristics and does not exempt the user from testing the suitability of products and from ascertaining that the industrial property rights of third parties are not violated. No liability whatsoever will be accepted for damage – regardless of its nature and its legal basis – arising from advice given in this publication. This does not apply in the event that we or our legal representatives or management are found guilty of having acted with intent or gross negligence. No liability is borne for damage due to ordinary negligence. This exclusion of liability applies also to the personal liability of our legal representatives and employees and other persons employed in performing our obligations.
©2002 by ContiTech Holding GmbH, Hannover.
All rights reserved.

CONTITECH

Unikeyic Electronics

Global Electronic Components Distributor

Click to view pricing, inventory, delivery, and lifecycle information:

CONTITECH:

950 5M 15 XPA 1900 XPB 1320 XPB 1600 XPZ 1900 9110201029200 XPA 1680 XPB 2360 1270 5M 15 1800 8M 30 CXP XPA1357 XPZ 1800 10 / T5 / 690 SS 171050RS10 91304010000005 475 5M 9 90 XL 037 510 H 100 670 5M 15 911022040923G 9110030380000 CTD 800-8M-21 187 L 075 9130660400010 CTD 800-8M-12 RG4L400 XPZ687 322 L 050 911022020000G 9130551000000