4.5mm HEX FEMALE STANDOFFS

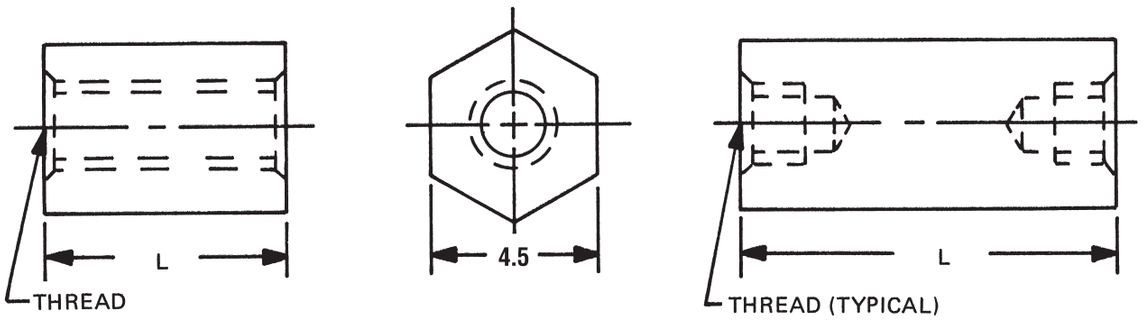

ORDERING CODE

MXXXX	XXXX	XX	XX
LENGTH	THREAD	MATERIAL	FINISH

See page 7M for thread depth chart
See page 6M for finish codes
For non-standard parts contact Sales Office

LENGTH	PART NO.
3	**M1250**
4	**M1251**
5	**M1252**
6	**M1253**
7	**M1254**
8	**M1255**
9	**M1256**
10	**M1257**
11	**M1258**
12	**M1259**
13	**M1260**
14	**M1261**
15	**M1262**
16	**M1263**
17	**M1264**
18	**M1265**

LENGTH	PART NO.
19	**M1266**
20	**M1267**
21	**M1268**
22	**M1269**
23	**M1270**
24	**M1271**
25	**M1272**
28	**M1273**
31	**M1274**
34	**M1275**
37	**M1276**
40	**M1277**
43	**M1278**
46	**M1279**
49	**M1280**
52	**M1281**

THREAD	CODE
M2.5x0.45	2545
M3x0.5	3005

MATERIAL	CODE	RoHS
Aluminum	AL	YES
Brass	B	YES
Stainless Steel	SS	YES
Steel	S	YES
Nylon	N	YES

RAF ELECTRONIC HARDWARE
95 Silvermine Road, Seymour, Ct. 06483 Phone: 203-888-2133 Fax: 203-888-9860
e-mail : info@rafhdwe.com Web: www.rafhdwe.com

Unikeyic Electronics

Global Electronic Components Distributor

Click to view pricing, inventory, delivery, and lifecycle information:

RAF Electronic Hardware:

0821-SS 0821-SS-20 2071-440-AL M0712-6-N 1133-8-SS 1188-8-AL 2063-440-AL 3045-B-440-B 4750-1MOD ST ST 7213-SS M2140-3005-B-12 1111 2 AL 7 1885-2520-S 4501-440-B-12 4501T-440-SS 4537-440-N 2134-632-AL 1684-832-AL 2105-632-AL 4034-440-SS 4502-440-AL M0500-25-AL 4001-440-SS M0548-3-AL M1417-5008-N 1111-4-AL 2107-632-N M3215-3005-3005-28 M1457-6010-B 1130-8-SS