

SECION:A-A

G-Switch Specification:

1.Current rated: 0.5A AC/DC
2.Voltage rating: 50V AC/DC
3.Withstanding voltage: 500V AC
4.Contact resistance: 30mΩ max.
5.Insulation resistance: 500MΩ min
6.Durability cycle: 30Cycles
7.Removal force: 0.04kgf/Pin min
8.Operating temperature range: -25°C ~ +85°C



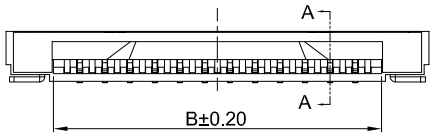

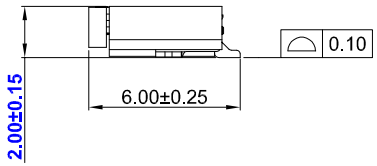

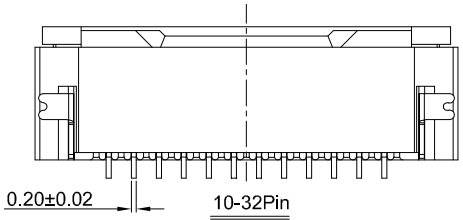

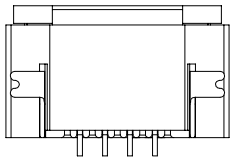

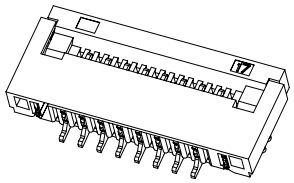

GT-F1008 S R 20 -XX X XX 01

- **G-Switch**
- **Series No**
- **Termipoint** S-SMT
- **Angle** R-90°
- **Terminal Plating** MT-Matte tin, 01-G/F
- **Housing Colour** S-Nature
- **Pin Q' PY** 04~32
- **Height** 20-2.0mm

Ordering Information:

Circuit	Dimensions(mm) A	B	C	Circuit	Dimensions(mm) A	B	C
4	3.00	5.10	8.90	19	18.00	20.10	23.90
5	4.00	6.10	9.90	20	19.00	21.10	24.90
6	5.00	7.10	10.90	21	20.00	22.10	25.90
7	6.00	8.10	11.90	22	21.00	23.10	26.90
8	7.00	9.10	12.90	23	22.00	24.10	27.90
9	8.00	10.10	13.90	24	23.00	25.10	28.90
10	9.00	11.10	14.90	25	24.00	26.10	29.90
11	10.00	12.10	15.90	26	25.00	27.10	30.90
12	11.00	13.10	16.90	27	26.00	28.10	31.90
13	12.00	14.10	17.90	28	27.00	29.10	32.90
14	13.00	15.10	18.90	29	28.00	30.10	33.90
15	14.00	16.10	19.90	30	29.00	31.10	34.90
16	15.00	17.10	20.90	31	30.00	32.10	35.90
17	16.00	18.10	21.90	32	31.00	33.10	36.90
18	17.00	19.10	22.90	---	---	---	---

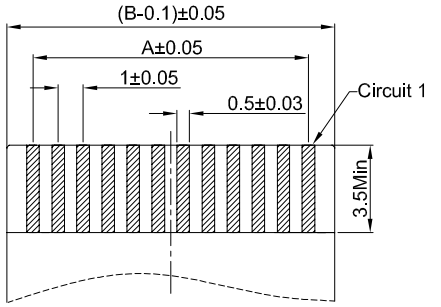

APPLICABLE FPC

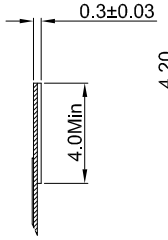

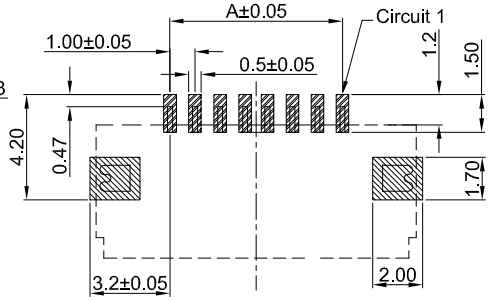

PCB REFERENCE DIAGRAM
TOLERANCE:±0.05

NO.	PART NAME	MATERIAL	REMARK
4	SOLDER TABS	PHOSPHOR BRONZE	MATTE Tin
3	CONTACT	PHOSPHOR BRONZE	MATTE Tin Or Gold-Flash On Contact Area
2	COVER	LCP,94V-0	BLACK
1	HOUSING	LCP,94V-0	NATURE

Pb Process Capable | RoHS Compliant EU RoHS Standards | Compliant Halogen Free

SCALE: 1:1	UNIT: mm	Title:	FPC 1.00mm Pitch 90° H2.0mm SMT Type Connector
SIZE: A4			
Unless otherwise General Tolerance: X ±0.40, X.x ±0.30, X.xx ±0.20, X° ±5°, X.x° ±3°		Model Code:	GT-F1008SR20-XXXXX01

DRAWN	CHECKED	APPROVED	DATE
Jiang	Hu	Chen	2021.06.28

品赞科技 b-Switch ®
www.dg-switch.com

REV: A0 SHEET: 1/1