1 Product Identification

GDNR	3015	-	1R0	M	T	F
①	②		③	④	⑤	⑥

① Product Symbol

② Dimensions（See two）

③ Inductance Value (1R0:1.0μH)

④ Inductance Tolerance (J:±5%;K:±10%; M:±20%; N:±30%)

⑤ Packaging Style (B: Bulk; T: Tape & Reel)

⑥ Lead Free

2 Appearance, Dimensions(mm)

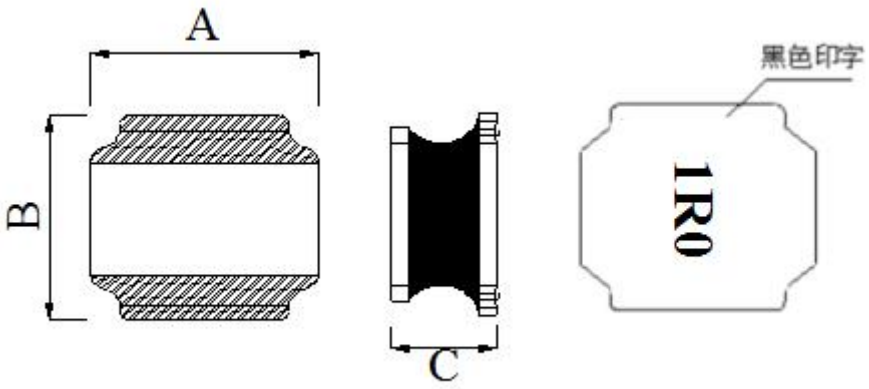

A	B	C
3.0±0.2	3.0±0.2	1.5 Max

LAND PATTERN DIMENSIONS

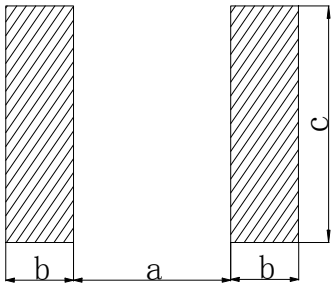

/	mm
a	1.20
b	0.95
c	2.70

3 Specifications

Part No.	Inductance L0(uH) ±20% @100KHz/1V	RDC (mΩ)	Saturation Current (A)Max	Heat Rating Current (A)Max
GDNR3015-1R0MTF	1.0	40±30%	2.3	2.2
GDNR3015-2R2MTF	2.2	60±30%	1.6	1.65
GDNR3015-100MTF	10.0	250±30%	0.72	0.8

※ Note

*Rated current is the DC current that reduces the initial inductance by 30% or when the temperature rises △ T = 40℃

4 Packaging

(1) Dimensions of Reel（mm）

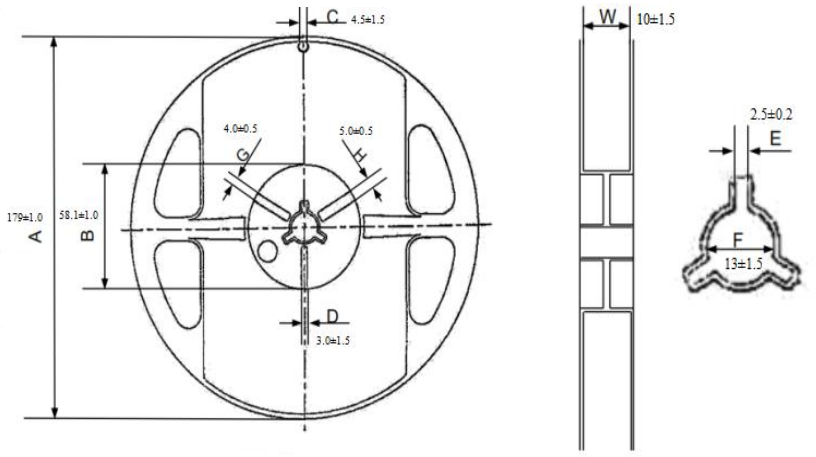

(2) Dimensions of Tape (mm):

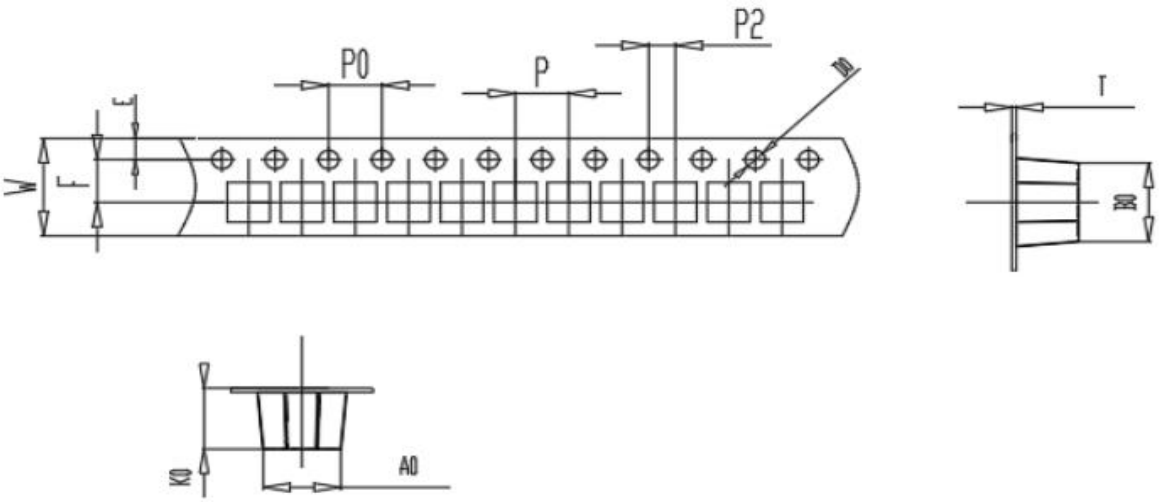

W	A0	B0	K0	P	F	E	D	P0	P2	T	Packaging quantity
8.0 ±0.3	3.3 ±0.1	3.3 ±0.1	1.9 ±0.1	4.0 ±0.1	3.5 ±0.1	1.75 ±0.1	1.5+ 0.1/-0.0	4.0 ±0.1	2.0 ±0.1	0.25 ±0.05	2000PCS/REEL