

Optical reading head

PCV100-F200-R4-V19

- RS-485 interface
- Non-contact positioning on Data Matrix code tape
- Travel ranges up to 10 km, in X and Y direction
- Mechanically rugged: no wearing parts, long operating life, maintenance-free
- High resolution and precise positioning, especially for facilities with curves and switch points as well as inclines and declines.

Read head for incident light positioning system

Dimensions

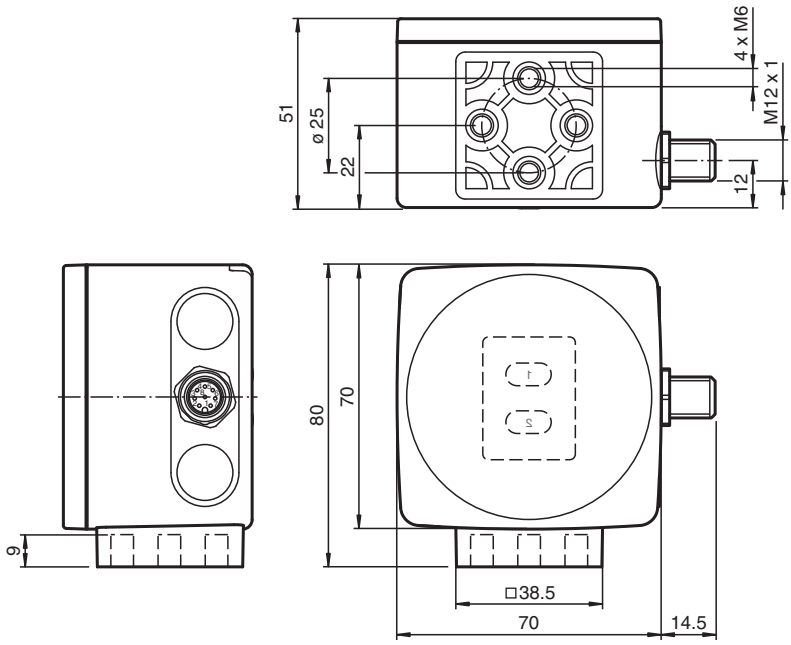

Technical Data

General specifications		
Passage speed	v	≤ 8 m/s
Measuring range		max. 10000 m
Light type		Integrated LED lightning (red)
Scan rate		40 s^{-1}
Read distance		100 mm
Depth of focus		± 20 mm
Reading field		50 mm x 30 mm
Ambient light limit		100000 Lux
Resolution		± 0.1 mm
Nominal ratings		
Camera		

Release date: 2024-07-29 Date of issue: 2024-07-29 Filename: 236997_eng.pdf

Technical Data

Type		CMOS , Global shutter
Processor		
Clock pulse frequency		600 MHz
Speed of computation		4800 MIPS
Digital resolution		32 Bit
Functional safety related parameters		
$MTTF_d$		99 a
Mission Time (T_M)		20 a
Diagnostic Coverage (DC)		0 %
Indicators/operating means		
LED indication		7 LEDs (communication, alignment aid, status information)
Electrical specifications		
Operating voltage	U_B	15 ... 30 V DC , PELV
No-load supply current	I_0	max. 200 mA
Power consumption	P_0	3 W
Interface		
Interface type		RS-485 - Interface
Data output code		binary code
Transfer rate		38400 ... 230400 Bit/s
Termination		Switchable terminal resistor
Query cycle time		≥ 10 ms
Input		
Input type		1 to 3 functional inputs , programmable
Input impedance		≥ 27 kΩ
Output		
Output type		1 to 3 switch outputs , PNP , programmable , short-circuit protected
Switching voltage		Operating voltage
Switching current		150 mA each output
Standard conformity		
Emitted interference		EN 61000-6-4:2007+A1:2011
Noise immunity		EN 61000-6-2:2005
Shock resistance		EN 60068-2-27:2009
Vibration resistance		EN 60068-2-6:2008
Approvals and certificates		
CE conformity		CE
UKCA conformity		UKCA
UL approval		cULus Listed, General Purpose, Class 2 Power Source, Type 1 enclosure
CCC approval		CCC approval / marking not required for products rated ≤36 V
Ambient conditions		
Operating temperature		0 ... 60 °C (32 ... 140 °F) , -20 ... 60 °C (-4 ... 140 °F) (noncondensing; prevent icing on the lens!)
Storage temperature		-20 ... 85 °C (-4 ... 185 °F)
Relative humidity		90 % , noncondensing
Mechanical specifications		
Connection type		8-pin, M12 x 1 connector
Degree of protection		IP67
Material		
Housing		PC/ABS
Mass		approx. 160 g
Dimensions		
Height		70 mm
Width		70 mm
Depth		50 mm

Release date: 2024-07-29 Date of issue: 2024-07-29 Filename: 236997_eng.pdf

Technical Data

Factory settings	
X resolution (protocol)	1 mm
Y resolution (protocol)	1 mm
Code tape orientation	0 °
Address	0
Baud rate	115200 Bd
Bus termination	ON
"No Position" X value	0
"No Position" Y value	0
"No Position" speed value	127
Overspeed threshold (protocol)	12.5 m/s
X value in case of error	Error number
Y value in case of error	Error number
Speed value in case of error	Error number
Code tape width	two-rowed
X positon offset	0 mm
Function input/output	inactive

Connection

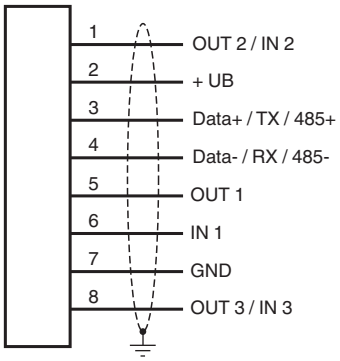

Connection Assignment

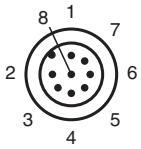

Release date: 2024-07-29 Date of issue: 2024-07-29 Filename: 236997_eng.pdf

Characteristic Curve

Coordinates

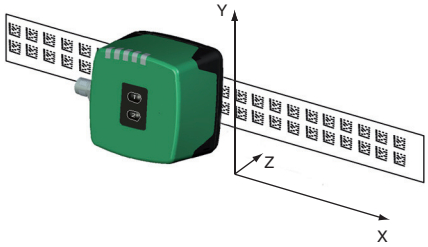

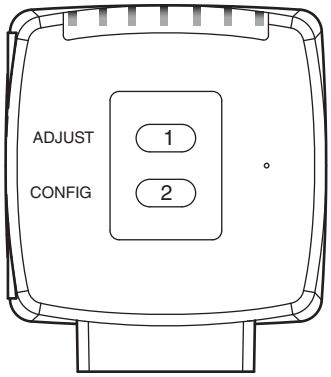

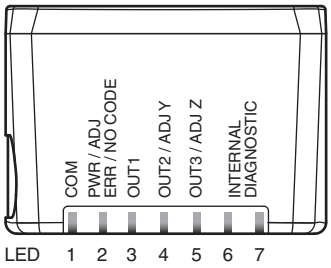

Release date: 2024-07-29 Date of issue: 2024-07-29 Filename: 236997_eng.pdf

Additional Information

General

The reading head is part of the positioning system in the method for measurement by Pepperl+Fuchs. It consists of a camera module and an integrated illumination unit among other things. The reading head detects position marks, which are put on an adhesive code band in the form of Data Matrix code. The mounting of the code band is as a rule stationary on a firm part of the plant (elevator shaft, overhead conveyor mounting rails…); that of the reading head is parallel on the moving "vehicle" (elevator car, overhead conveyor chassis…).

Mounting and commissioning

Mount the reading head such that its optical surface captures the optimal read distance to the code band (see Technical Data). The stability of the mounting and the guidance of the vehicle must be provided such that the depth of field of the reading head is not closed during operation. All reading heads can be optimally customized by parameterization for specific requirements. The parameterization of reading heads with a bi-directional interface (all except SSI-interface) can take place via the interface itself (internal parameterization) or via an optical parameterization code (external parameterization). The reading heads with SSI interface only have the possibility of external parameterization via optical parameterization codes.

Displays and Controls

The reading head allows visual function check and fast diagnosis with 7 indicator LEDs. The reading head has 2 buttons on the reverse of the device to activate the alignment aid and parameterization mode.

LEDs

LED	Color	Label	Meaning
1	Yellow	COM	Communication active
2	Green/red	PWR/ADJ ERR/NO CODE	Code recognized/not recognized, Error
3	Yellow	OUT1	Output 1
4	Yellow	OUT2/ADJ Y	Output 2, Alignment aid Y
5	Yellow	OUT3/ADJ Z	Output 3, Alignment aid Z
6,7	red/green/yellow	INTERNAL DIAGNOSTICS	Internal diagnostics

External parameterization

For external parameterization you require the parameterization code as Data Matrix with the desired reading head parameters. Data Matrix code cards for step-by-step external parameterization are printed in the reading heads operating instructions.
Parameterization is only possible within 10 minutes of switching on the reading head. If a button is pressed after 10 minutes subsequent to switching on, there is visual signaling via the LEDs (LED1, yellow/LED2, red/LED3, yellow/LED4, yellow/LED5, yellow flash for 2 seconds)

- The switchover from normal operation to parameterization mode is via button 2 on the reverse of the reading head. Button 2 must be pressed for more than 2 seconds. LED3 now flashes.
  Note: Parameterization mode automatically ends after 1 minute of inactivity. The reading head returns to normal operation and works with unchanged settings.
- Place the parameterization code in the view of the camera module. After recognition of the parameterization code, the green LED2 lights up for 1s. In the event of an invalid parameterization code, the red LED2 lights up for 2 s.
- A short press on button 2 ends the parameterization mode and the changed parameters are not stored volatile in the reading head.

Alignment aid for the Y and Z coordinates

The activation of the alignment aid is only possible within 10 minutes of switching on the reading head. The switchover from normal operation to “alignment aid operating mode is via button 1 on the reverse of the reading head.

- Press the button 1 for longer than 2 s. LED2 flashes green for a recognized code band. LED2 flashes red for an unrecognized code band.
- Z coordinate: If the distance of the camera to the code band too small, the yellow LED5 lights up. If the distance of the camera to the code band too large, the yellow LED5 lights up. Within the target range, the yellow LED5 flashes at the same time as the green LED2.
- Y coordinate: If the optical axis of the camera is too deep in relation to the middle of the code band, the yellow LED4 lights up. If the optical axis is too high, the yellow LED4 extinguishes. Within the target range, the yellow LED4 flashes at the same time as the green LED2.
- A short press on button 1 ends the alignment aid and the reading head changes to normal operation.

Release date: 2024-07-29 Date of issue: 2024-07-29 Filename: 236997_eng.pdf