REVISIONS			
LTR	DESCRIPTION	DATE	APPROVED
C	PER ECO NO. 16499	6-14-91	G.D

NOTES:

1. ALL DIMENSIONS ARE IN INCHES [MILLIMETERS]
2. THIS PRODUCT IS DESIGNED TO SPLICE BRAIDED CABLE SHIELDS AND TERMINATE INDIVIDUAL WIRE SHIELDS.
3. SEE DWG TR FOR DETAIL ON TINEL-LOCK RING. ALL RINGS ARE MARKED WITH THERMOCHROMIC PAINT WHICH CHANGES COLOR WHEN INSTALLATION TEMPERATURE IS REACHED.
4. PART TO BE BAGGED AND TAGGED WITH CODE IDENT. NO. AND PART NO. (E.G: 06090 TBR1AB08A08AI)
5. CONSULT FACTORY FOR ADDITIONAL SIZES, MATERIAL AND FINISHES.

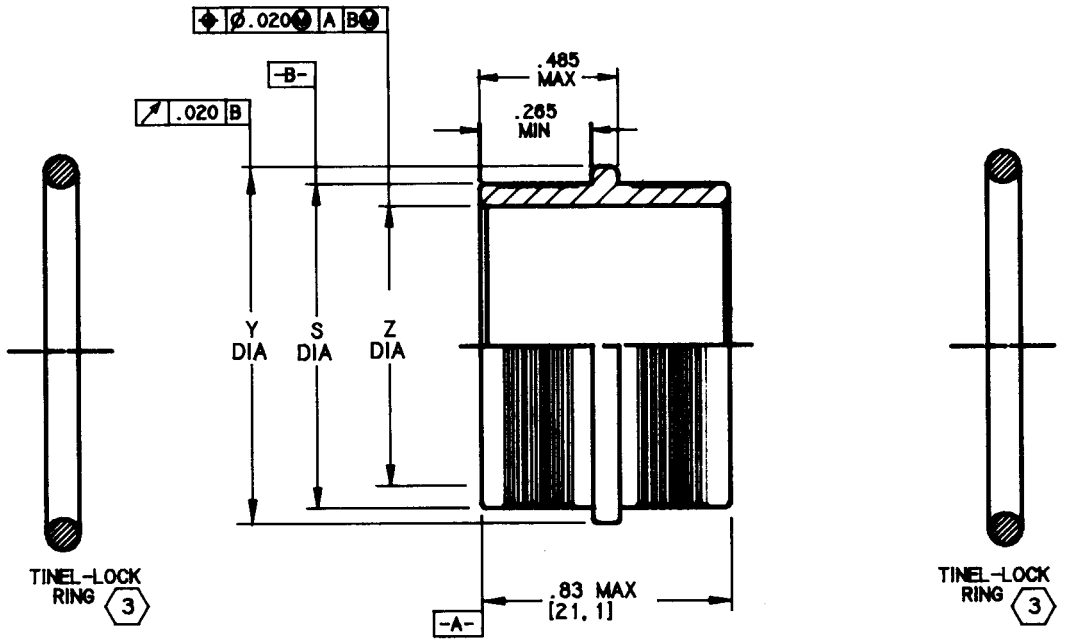

ENTRY SIZE	Z DIA +.010 -.020 [+0.25] [-0.51]	S DIA	Y DIA MAX
04	.250 [6.35]	.376 [9.56] .371 [9.42]	.515 [13.08]
05	.312 [7.92]	.438 [11.13] .433 [11.00]	.578 [14.68]
06	.375 [9.53]	.501 [12.73] .496 [12.60]	.640 [16.26]
07	.437 [11.10]	.563 [14.31] .556 [14.12]	.703 [17.86]
08	.500 [12.70]	.626 [15.91] .619 [15.72]	.765 [19.43]
10	.625 [15.88]	.752 [19.11] .742 [18.84]	.890 [22.61]
12	.750 [19.05]	.877 [22.28] .867 [22.02]	1.015 [25.78]
14	.875 [22.23]	1.002 [25.46] .991 [25.17]	1.140 [28.96]
16	1.000 [25.40]	1.127 [28.63] 1.116 [28.34]	1.265 [32.13]

PART NUMBERING SYSTEM

TBR1 A B 08 A 08 A I

- PRODUCT DESIGNATOR
- MATERIAL
  - A: ALUMINUM PER QQ-A-225
  - S: STAINLESS STEEL PER QQ-S-763 CLASS 316 OR 316L, CONDITION A. (HEAT TREAT PER MIL-H-6875).
- FINISH
  - SEE S-CH00-0157-002
- ENTRY SIZE
- BRAID
  - SEE MSG-101
- ENTRY SIZE
- RING INSULATED LINING

SPECIFICATION CONTROL DRAWING

UNLESS OTHERWISE SPECIFIED DIMENSIONS ARE IN INCHES. METRIC DIMENSIONS ARE IN BRACKETS.

DECIMALS
.XXX ± { mm}
.XX ± { mm}

ANGLES
.X ±

WEIGHT
lbs { g}

DRAWN	Q. BUI	6-13-88
CHECKED	D.BARTS	9-12-88
APPROVED	C.SHURTLEFF	9-12-88
APPROVED	N.DYDO	9-12-88
CAD NAME	TBR1	
THIRD ANGLE PROJECTION		

Raychem

TITLE: TINEL-LOCK SPLICER

SIZE	CODE IDENT. NO.	DWG. NO.	REV
C	06090	TBR 1	c

DO NOT SCALE THIS DRAWING — SHEET 1 OF 1

This drawing and the information set forth hereon are the property of Raychem Corporation.

If this document is printed it becomes uncontrolled.
Check with the web for latest revision.

Unikeyic Electronics

Global Electronic Components Distributor

Click to view pricing, inventory, delivery, and lifecycle information:

TE Connectivity:

1393431-1 175977-2 1969656-1 3631B101LL 936348-1 RH73H2A40MKTN 1-962915-1 CRGCQ2010J3K3 SBCHE64R7K U5254-000005-030PA 917696-1 SMW73R0JT 3430B2F51RTDF MPT100C18RF 141991-2 2380312-2 3-1393225-0 650075-000 1-794222-0 2-292161-3 2005330-1 2310537-1 TE50BR39J 1903112-2 2377783-2 CPF0402B37K4E1 ROX05SJ18R 1743455-2 2834055-1 SBCHE154R7K