# SISA14DN-T1-GE3

N-Channel Enhancement Mode MOSFET

## Description

The SISA14DN-T1-GE3 uses advanced trench technology to provide excellent $R_{DS(ON)}$, low gate charge and operation with gate voltages as low as 4.5V. This device is suitable for use as a Battery protection or in other Switching application.

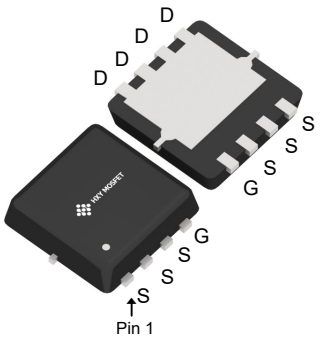


DFN3X3-8L

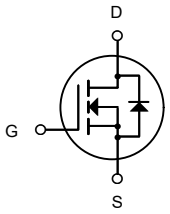


N-Channel MOSFET

## General Features

$V_{DS}$ = 30V $I_D$ = 60A

$R_{DS(ON)}$ < 5.5mΩ@ $V_{GS}$=10 V

## Application

Battery protection

Load switch

Uninterruptible power supply

## Package Marking and Ordering Information

| Product ID | Pack | Brand | Qty(PCS) |
|---|---|---|---|
| SISA14DN-T1-GE3 | DFN3X3-8L | HXY MOSFET | 5000 |

## Absolute Maximum Ratings (Tc=25 °C unless otherwise specified)

| Symbol | Parameter | Rating | Units |
|---|---|---|---|
| $V_{DS}$ | Drain-Source Voltage | 30 | V |
| $V_{GS}$ | Gate-Source Voltage | ±20 | V |
| $I_D$@$T_C$=25°C | Continuous Drain Current, $V_{GS}$ @ 10V[1] | 60 | A |
| $I_D$@$T_C$=100°C | Continuous Drain Current, $V_{GS}$ @ 10V[1] | 42 | A |
| $I_{DM}$ | Pulsed Drain Current[2] | 192 | A |
| EAS | Single Pulse Avalanche Energy[3] | 144.7 | mJ |
| $I_{AS}$ | Avalanche Current | 53.8 | A |
| $P_D$@$T_C$=25°C | Total Power Dissipation[4] | 62.5 | W |
| $P_D$@$T_A$=25°C | Total Power Dissipation[4] | 4.5 | W |
| $T_{STG}$ | Storage Temperature Range | -55 to 150 | °C |
| $T_J$ | Operating Junction Temperature Range | -55 to 150 | °C |
| $R_{\theta JA}$ | Thermal Resistance Junction-ambient [1] | 62 | °C/W |
| $R_{\theta JC}$ | Thermal Resistance Junction-Case[1] | 2.4 | °C/W |

## Electrical Characteristics ($T_J$=25°C, unless otherwise noted)

| Symbol | Parameter | Conditions | Min. | Typ. | Max. | Unit |
|---|---|---|---|---|---|---|
| $BV_{DSS}$ | Drain-Source Breakdown Voltage | $V_{GS}$=0V , $I_D$=250uA | 30 | --- | --- | V |
| $\triangle BV_{DSS}/\triangle T_J$ | BVDSS Temperature Coefficient | Reference to 25℃ , $I_D$=1mA | --- | 0.0213 | --- | V/℃ |
| $R_{DS(ON)}$ | Static Drain-Source On-Resistance[2] | $V_{GS}$=10V , $I_D$=30A | --- | 4 | 5.5 | mΩ |
| | | $V_{GS}$=4.5V , $I_D$=15A | | 5.2 | 6 | |
| $V_{GS(th)}$ | Gate Threshold Voltage | $V_{GS}$=$V_{DS}$ , $I_D$ =250uA | 1.0 | --- | 2.5 | V |
| $\triangle V_{GS(th)}$ | $V_{GS(th)}$ Temperature Coefficient | | --- | -5.8 | --- | mV/℃ |
| $I_{DSS}$ | Drain-Source Leakage Current | $V_{DS}$=24V , $V_{GS}$=0V , $T_J$=25℃ | --- | --- | 1 | uA |
| | | $V_{DS}$=24V , $V_{GS}$=0V , $T_J$=55℃ | --- | --- | 5 | |
| $I_{GSS}$ | Gate-Source Leakage Current | $V_{GS}$=±20V , $V_{DS}$=0V | --- | --- | ±100 | nA |
| gfs | Forward Transconductance | $V_{DS}$=5V , $I_D$=30A | --- | 26.5 | --- | S |
| $R_g$ | Gate Resistance | $V_{DS}$=0V , $V_{GS}$=0V , f=1MHz | --- | 1.4 | --- | Ω |
| $Q_g$ | Total Gate Charge (4.5V) | $V_{DS}$=15V , $V_{GS}$=4.5V , $I_D$=15A | --- | 31.6 | --- | nC |
| $Q_{gs}$ | Gate-Source Charge | | --- | 8.6 | --- | |
| $Q_{gd}$ | Gate-Drain Charge | | --- | 11.7 | --- | |
| $T_{d(on)}$ | Turn-On Delay Time | $V_{DD}$=15V , $V_{GS}$=10V , $R_G$=3.3Ω $I_D$=15A | --- | 9 | --- | ns |
| $T_r$ | Rise Time | | --- | 19 | --- | |
| $T_{d(off)}$ | Turn-Off Delay Time | | --- | 58 | --- | |
| $T_f$ | Fall Time | | --- | 15.2 | --- | |
| $C_{iss}$ | Input Capacitance | $V_{DS}$=15V , $V_{GS}$=0V , f=1MHz | --- | 3075 | --- | pF |
| $C_{oss}$ | Output Capacitance | | --- | 400 | --- | |
| $C_{rss}$ | Reverse Transfer Capacitance | | --- | 315 | --- | |
| $I_S$ | Continuous Source Current[1,6] | $V_G$=$V_D$=0V , Force Current | --- | --- | 60 | A |
| $I_{SM}$ | Pulsed Source Current[2,6] | | --- | --- | 192 | A |
| $V_{SD}$ | Diode Forward Voltage[2] | $V_{GS}$=0V , $I_S$=1A , $T_J$=25℃ | --- | --- | 1 | V |

Note :

1.The data tested by surface mounted on a 1 inch$^2$ FR-4 board with 2OZ copper.

2.The data tested by pulsed , pulse width ≦ 300us , duty cycle ≦ 2%

3 .The EAS data shows Max. rating . The test condition is $V_{DD}$=25V,$V_{GS}$=10V,L=0.1mH,$I_{AS}$=34A

4.The power dissipation is limited by 150℃ junction temperature

5 .The data is theoretically the same as $I_D$ and $I_{DM}$ , in real applications , should be limited by total power dissipation.

## Typical Characteristics

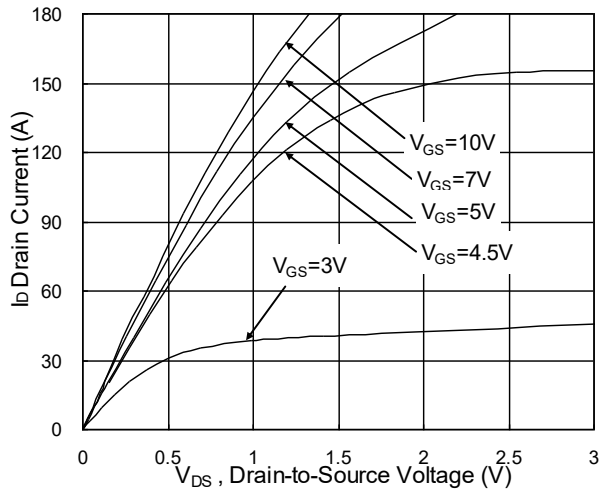


**Fig.1 Typical Output Characteristics**

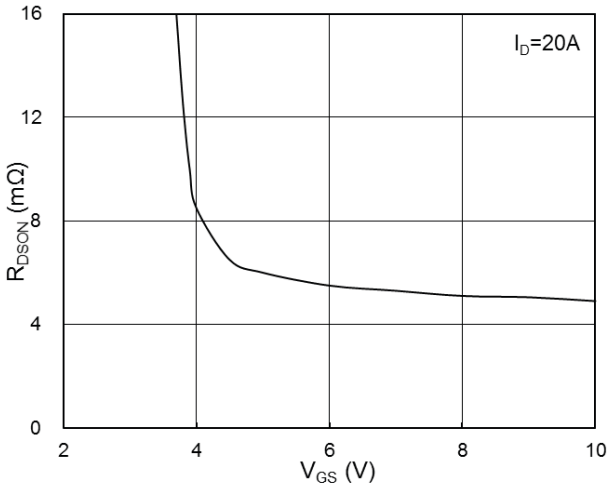


**Fig.2 On-Resistance vs. G-S Voltage**

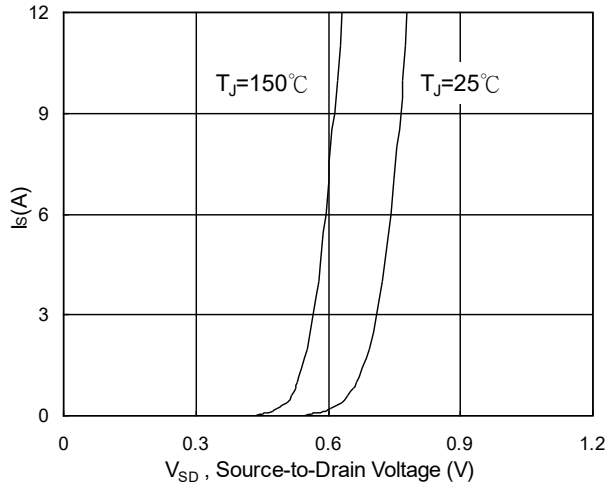


**Fig.3 Forward Characteristics of Reverse**

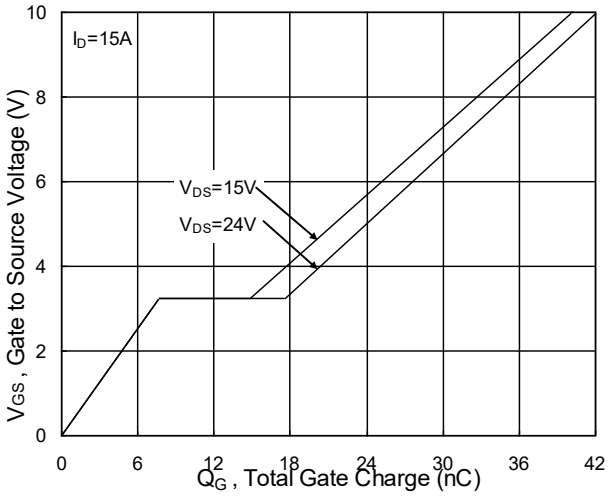


**Fig.4 Gate-Charge Characteristics**

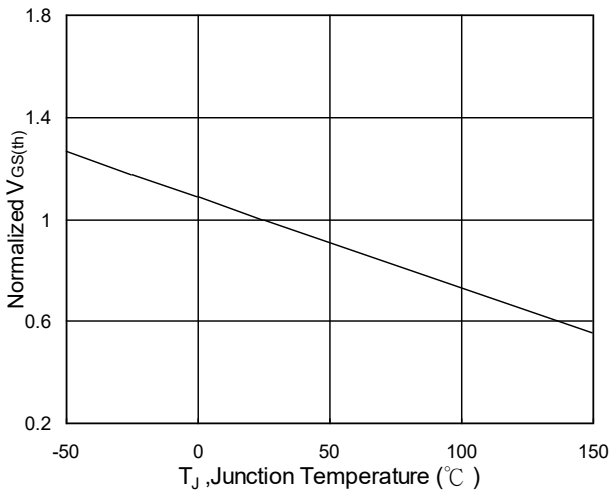


**Fig.5 Normalized $V_{GS(th)}$ vs. $T_J$**

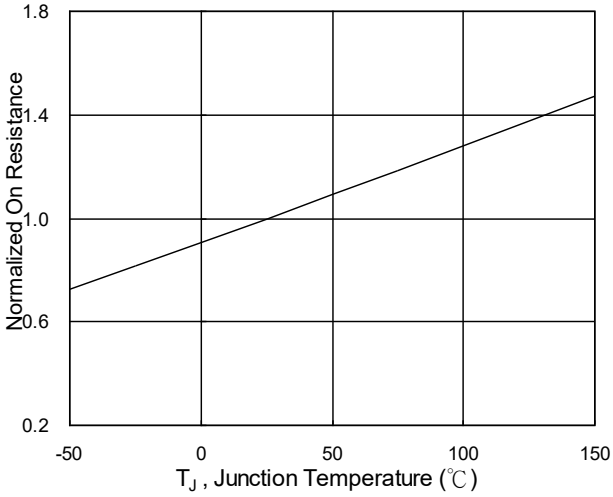


**Fig.6 Normalized $R_{DSON}$ vs. $T_J$**

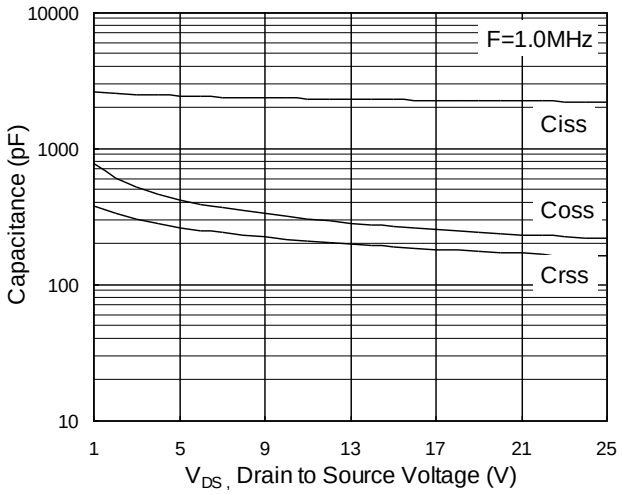


**Fig.7 Capacitance**

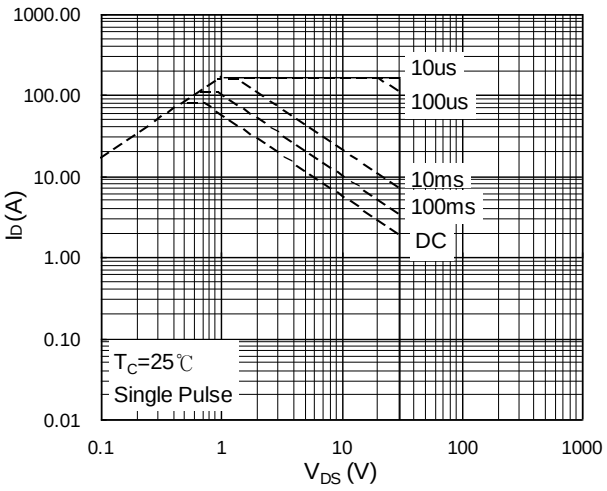


**Fig.8 Safe Operating Area**

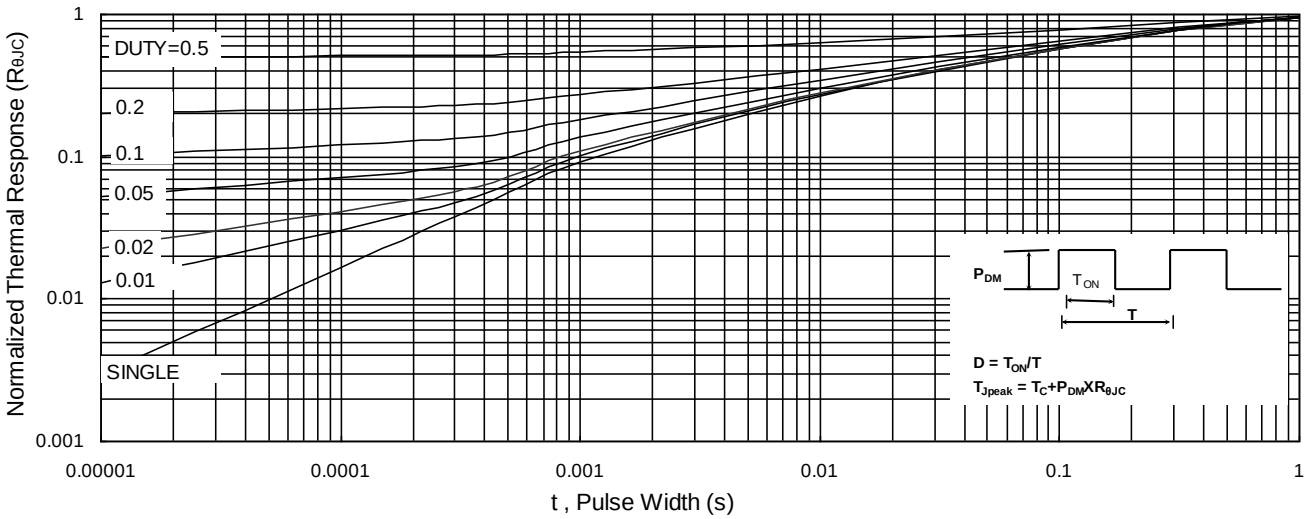


**Fig.9 Normalized Maximum Transient Thermal Impedance**

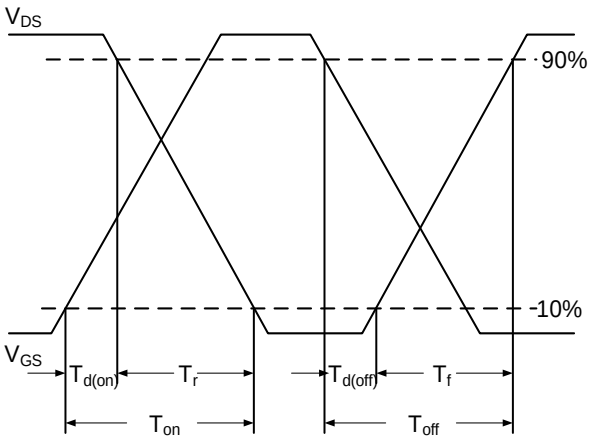


**Fig.10 Switching Time Waveform**

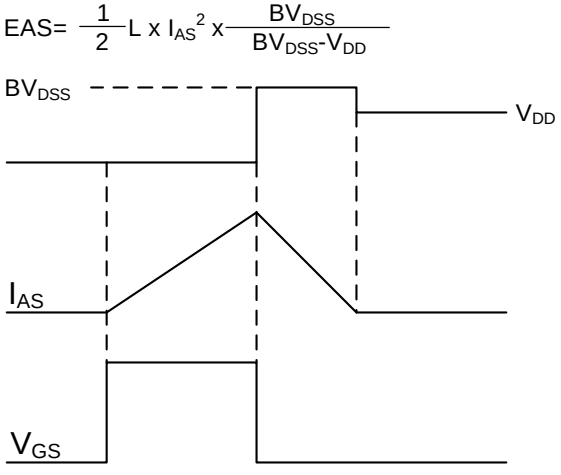


**Fig.11 Unclamped Inductive Switching Waveform**

## DFN3X3-8L Package Information

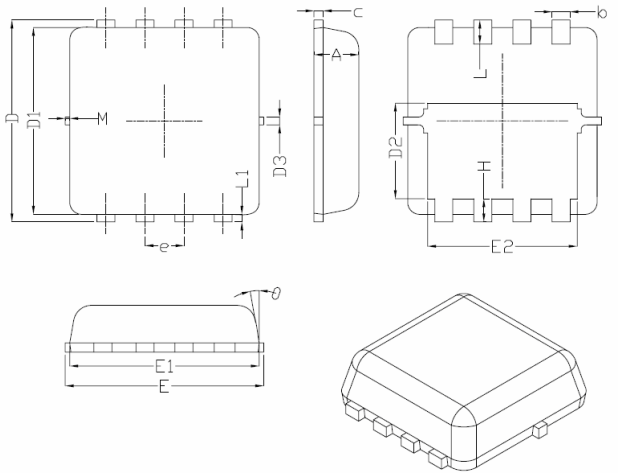


| Symbol | Dimensions In Millimeters | | |
|---|---|---|---|
| | Min. | Nom. | Max. |
| A | 0.70 | 0.75 | 0.80 |
| b | 0.25 | 0.30 | 0.35 |
| c | 0.10 | 0.15 | 0.25 |
| D | 3.25 | 3.35 | 3.45 |
| D1 | 3.00 | 3.10 | 3.20 |
| D2 | 1.48 | 1.58 | 1.68 |
| D3 | - | 0.13 | - |
| E | 3.20 | 3.30 | 3.40 |
| E1 | 3.00 | 3.15 | 3.20 |
| E2 | 2.39 | 2.49 | 2.59 |
| e | 0.65BSC | | |
| H | 0.30 | 0.39 | 0.50 |
| L | 0.30 | 0.40 | 0.50 |
| L1 | - | 0.13 | - |
| M | * | * | 0.15 |
| θ | | 10° | 12° |

## Attention

■ Any and all HUA XUAN YANG ELECTRONICS products described or contained herein do not have specifications that can handle applications that require extremely high levels of reliability, such as life-support systems, aircraft's control systems, or other applications whose failure can be reasonably expected to result in serious physical and/or material damage. Consult with your HUA XUAN YANG ELECTRONICS representative nearest you before using any HUA XUAN YANG ELECTRONICS products described or contained herein in such applications.

■ HUA XUAN YANG ELECTRONICS assumes no responsibility for equipment failures that result from using products at values that exceed, even momentarily, rated values (such as maximum ratings, operating condition ranges, or other parameters) listed in products specifications of any and all HUA XUAN YANG ELECTRONICS products described or contained herein.

■ Specifications of any and all HUA XUAN YANG ELECTRONICS products described or contained herein stipulate the performance, characteristics, and functions of the described products in the independent state, and are not guarantees of the performance, characteristics, and functions of the described products as mounted in the customer’s products or equipment. To verify symptoms and states that cannot be evaluated in an independent device, the customer should always evaluate and test devices mounted in the customer’s products or equipment.

■ HUA XUAN YANG ELECTRONICS CO.,LTD. strives to supply high-quality high-reliability products. However, any and all semiconductor products fail with some probability. It is possible that these probabilistic failures could
give rise to accidents or events that could endanger human lives, that could give rise to smoke or fire, or that could cause damage to other property. When designing equipment, adopt safety measures so that these kinds of accidents or events cannot occur. Such measures include but are not limited to protective circuits and error prevention circuits for safe design, redundant design, and structural design.

■ In the event that any or all HUA XUAN YANG ELECTRONICS products(including technical data, services) described or contained herein are controlled under any of applicable local export control laws and regulations, such products must not be exported without obtaining the export license from the authorities concerned in accordance with the above law.

■ No part of this publication may be reproduced or transmitted in any form or by any means, electronic or mechanical, including photocopying and recording, or any information storage or retrieval system, or otherwise, without the prior written permission of HUA XUAN YANG ELECTRONICS CO.,LTD.

■ Information (including circuit diagrams and circuit parameters) herein is for example only ; it is not guaranteed for volume production. HUA XUAN YANG ELECTRONICS believes information herein is accurate and reliable, but no guarantees are made or implied regarding its use or any infringements of intellectual property rights or other rights of third parties.

■ Any and all information described or contained herein are subject to change without notice due to product/technology improvement, etc. When designing equipment, refer to the "Delivery Specification" for the HUA XUAN YANG ELECTRONICS product that you intend to use.

# Unikeyic Electronics

Global Electronic Components Distributor

Click to view pricing, inventory, delivery, and lifecycle information:

## HXY MOSFET:

P6SMB200A HXY2101EI HAD8542ARZ HC4D20120A HT7150 MMBT3904T SS10100 BZT52C3V3S HT7540-1 HXY2300MI HXY8205ES BZT52C13 HESDNC5VB1AF-B HOPA2340UA IRLML6246PBF P6SMB36CA PESD5V0S1BB SQJA04EP-T1_BE3 SS1045 SS510C TPSMB28A-VR US2M HC3D10170A MAX487ESA SD15C SS5150B HMCP602-I/SN P6SMB33CA TPSMB100CA-VR DTC143ZE