JYEG

RoHS Compliant

Tangshan Guoxin Jingyuan Electronics Co.,Ltd

Add：Xinxing Electronics Industrial Park, Yutian,Tangshan,Hebei,China

TEL: 86-315-6118243 **E-mail: sales@jingyuan.com**

FAX: 86-315-6113576 **Web : www.jingyuan.com**

APPROVAL SHEET

Customer :

Part Number :

JYEG P/N : JYGD5

Holder : SMD5032 GLASS

Frequency : 8.000~54.000MHZ

Manufacturer : Guoxin Jingyuan Electronics

Date : 2025/12/30

Prepared	Checked	Approved
Huang Mingxing	Yang Tiesheng	Zhang Liqiang

(For Customer Use)

Acceptable	Non-Acceptable

Revision History

No.	Revised Date	Change Content	Approved	Remark
V1.0	25.12.30	Initial release	Yang Tiesheng	

1.This specification applies to SMD quartz crystal unit with a frequency of 8.000~54.000MHz.

2. Electrical characteristics

ITEM/TYPE	SMD5032 GLASS
Frequency Range	8.000~54.000MHz
Mode of Vibration	Fundamental
Frequency Tolerance (at 25°C)	±15ppm,or specify
Frequency Stability Over Operating Temperature Range	±30ppm/-40~85°C, ±50ppm, ±100ppm/-40~125°C, or specify
Shunt Capacitance	5pF Max.
Load Capacitance	6~50pF or Series
Resonance Resistance	As per below table1.
Drive Level	300μW Max.
Aging	±3ppm/year
Insulation Resistance	500MΩ@DC100V
Storage Temperature Range	-55~125°C

Frequency	Resonance Resistance
7.3728~16.000MHz	100Ω Max.
16.000~54.000MHz	30Ω Max.

3. Construction

3.1 Crystal enclosure seal:

■ Seam seal ☐ resistance weld ☐ cold weld

3.2 crystal enclosure medium

■ nitrogen ☐ vacuum ☐ dry air

4.Dimension:

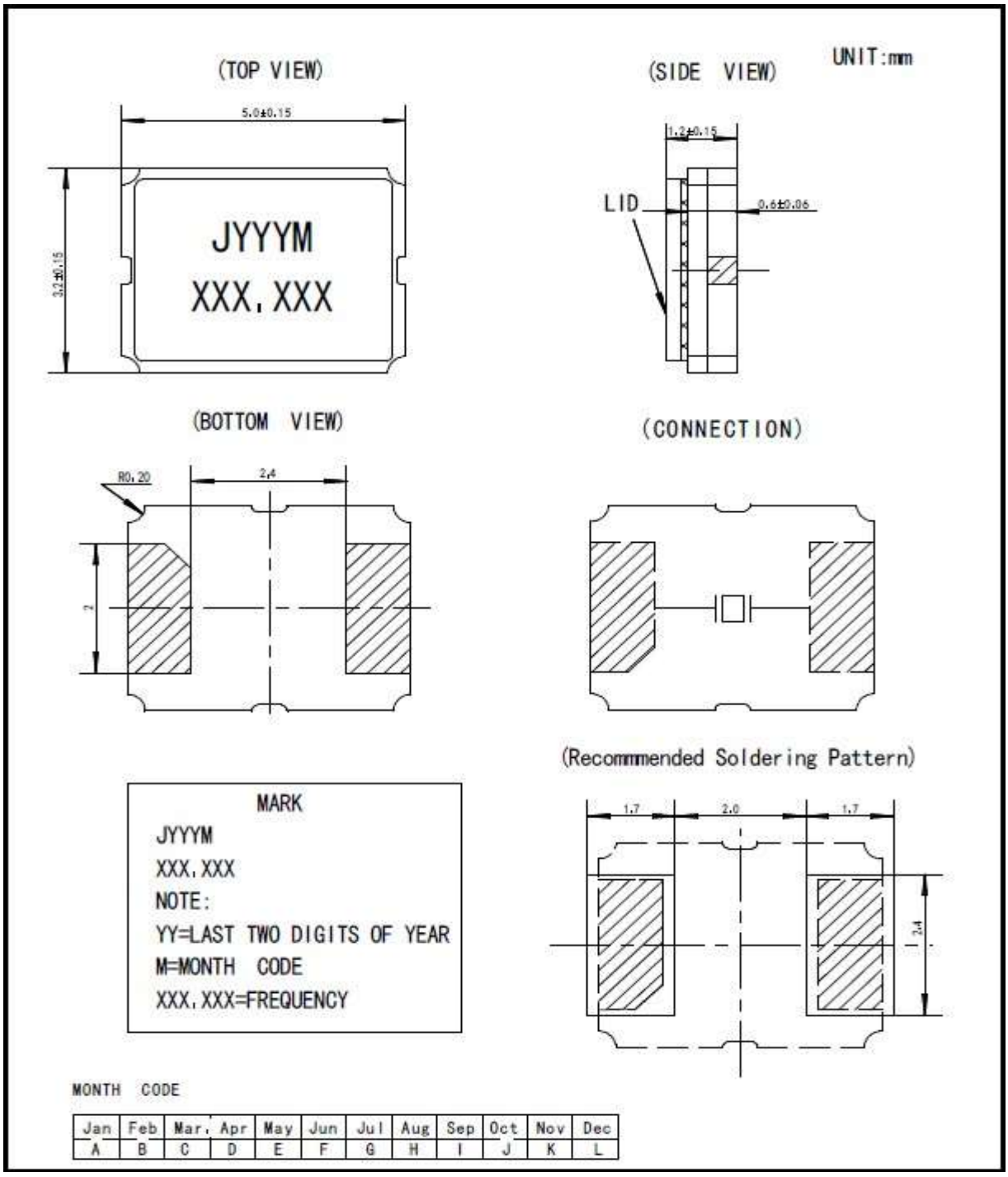

MONTH CODE

Jan	Feb	Mar.	Apr	May	Jun	Jul	Aug	Sep	Oct	Nov	Dec
A	B	C	D	E	F	G	H	I	J	K	L

5. Marking

■ Laser Marking ☐ Ink Marking

6.Inside Structure

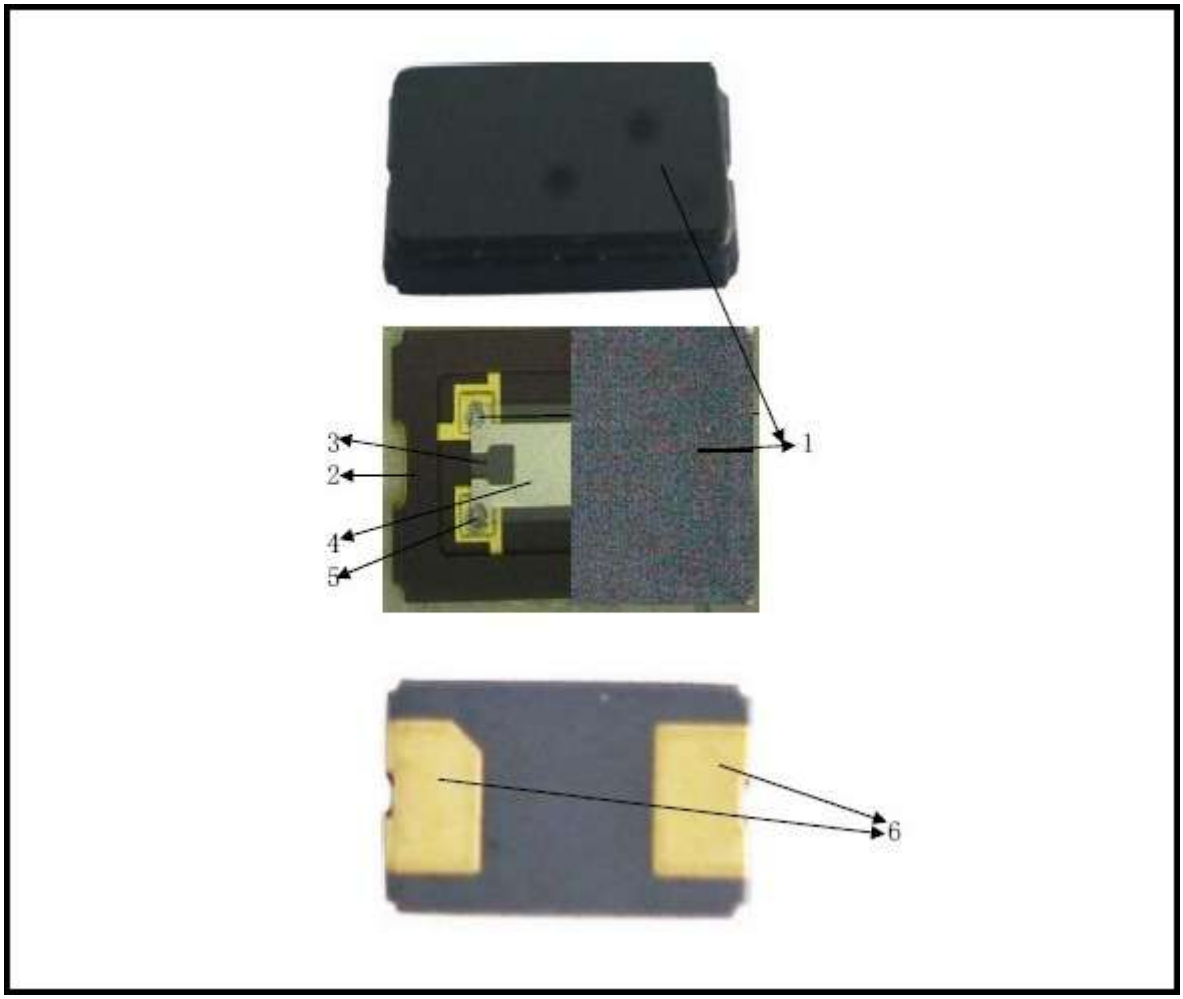

No.	Name	Material
(1)	Can	Ceramic
(2)	Base	Ceramic
(3)	Blank	Quartz
(4)	Electrode	Ag
(5)	Epoxy	Silicon based
(6)	Soldering Pads	Au plated

7.Taping Dimension and Packing Instruction

7.1

UNIT:mm

1.Dimensions of Carrier Tape

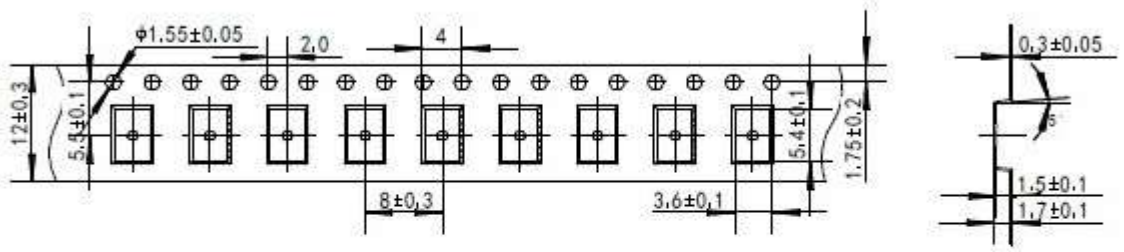

2.Dimensions of Reel

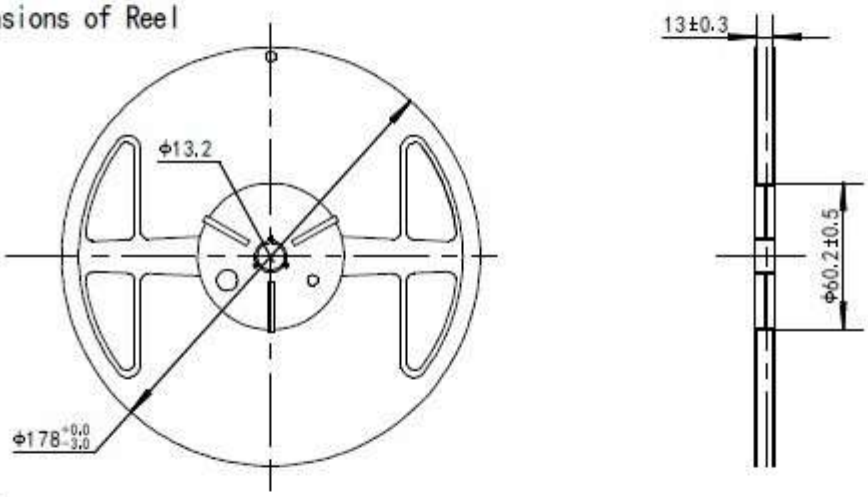

3.Packing

1 reel/box 1 reel=1000pcs

10 boxes/carton(the carton with bubble pad on four sides)

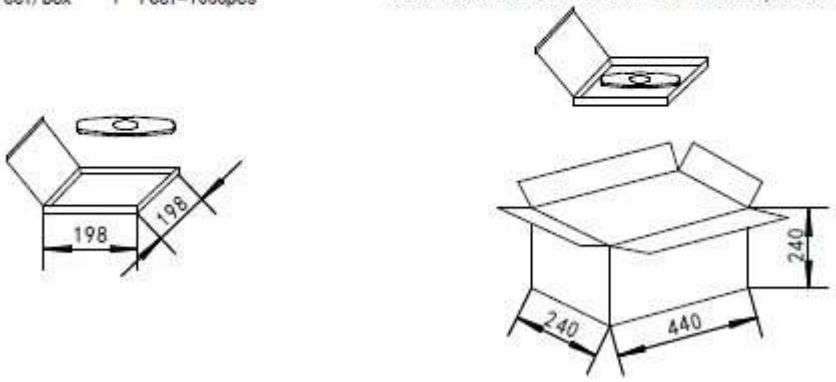

7.2

Release strength of cover tape

It has to between 30g to 90g under following condition.

Pulling direction : 165 deg. to 180 deg.

Speed : 300mm/min.

Otherwise unless specified.

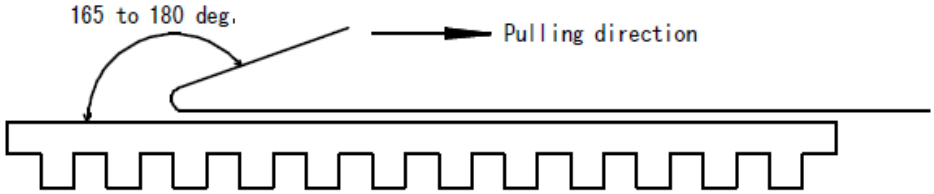

8.Reliability characteristic:

	Item	Condition	Specifications
8.1	Solderability	Solder bath temperature:260℃ , dwell time:5 seconds, Solder: 100% tin	A new uniform coating of solder shall cover a minimum of 95% of the surface being immersed.
8.2	Resistance to soldering heat	Solder temperature 260+/-3℃,Immersion time:10 S Solder bath composition:100% tin	△F≤+/-5ppm △R≤+/-15%+3Ω
8.3	Vibration	The entire frequency range: 10Hz to 55Hz ,Amplitude:1.5mm This motion shall be applied for a period of 2 h in each of 3 mutually perpendicular axes(a total of 6h)	△F≤+/-5ppm △R≤+/-15%+3Ω
8.4	Drop test	Drop from 75cm height on 3cm hard wooden board for 6 times	△F≤+/-5ppm △R≤+/-15%+3Ω
8.5	Cold Storage	The quartz crystal unit shall be stored at a temperature of –40+/-3℃ for 1000 h.then it shall be subjected to standard atmospheric conditions for 1h after which measurement shall be made.	△F≤+/-5ppm △R≤+/-15%+3Ω

<table>
<tr><td>8.6</td><td>High temperature high humidity storage (steady state)</td><td>The quartz crystal unit shall be stored at a temperature of 40+/-2℃ with relative humidity of 95% for 1000h, then it shall be subjected to standard atmospheric conditions for 2h after which measurement shall be made.</td><td>△F≤+/-5ppm
△R≤+/-15%+3Ω</td></tr>
<tr><td>8.7</td><td>Thermal shock</td><td>The quartz crystal unit shall be subjected to 50 successive
Change of temperature cycles. Each as shown in table below ,then it shall be subjected to standard atmospheric conditions for 1h after which measurement shall be made.
<table>
<tr><td></td><td>Temperature</td><td>Duration</td></tr>
<tr><td>1.</td><td>-40+/-3℃</td><td>15minutes</td></tr>
<tr><td>2.</td><td>100+/-2℃</td><td>15minutes</td></tr>
<tr><td>3.</td><td>Transition time</td><td>Within 10 seconds</td></tr>
</table></td><td>△F≤+/-5ppm
△R≤+/-15%+3Ω</td></tr>
<tr><td>8.8</td><td>Sealing</td><td>Helium leakage detector shall used to measure the leakage rate of gas through any faulty seal. Pressure:500Kpa, duration:120 minutes</td><td>Leakage rate≤$1*10^{-9}$ Pa.m^3/S</td></tr>
<tr><td>8.9</td><td>High temperature Life test</td><td>The quartz crystal unit shall be stored at a temperature of 85+/-3℃ for 720h ,then it shall be subjected to standard atmospheric condition for 1h after which measurement shall be made.</td><td>△F≤+/-5ppm
△R≤+/-15%+3Ω</td></tr>
</table>

9.All products are RoHs compliant

10. Reflow Profile

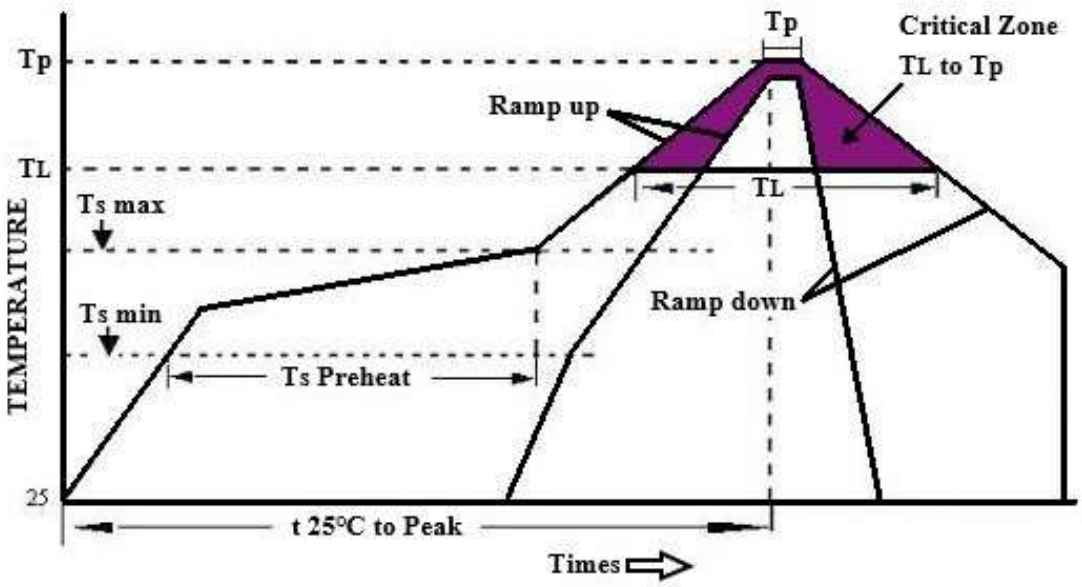

High Temperature Infrared /Convection

Note:Temperature shown are applied to body of device

Ts max to T_L(Ramp-up Rate)	3℃/second max
Preheat Temperature Min(Ts Min) Temperature Typical(Ts Typ) Temperature Max.(Ts Max) Time(ts)	 150℃ 175℃ 200℃ 60-180 seconds
Ram-up Rate(T_L to Tp)	3℃/second Max
Time Maintained Above: --Temperature(T_L) --Time(T_L)	 217℃ 60-150seconds
Peak Temperature (Tp)	260℃ Max for 10 seconds
Time within 5℃ of actual peak(t_p)	20-40 seconds
Ramp-down Rate	6℃/seconds Max
Tune 25℃ to Peak Temperature(t)	8 minutes Max
Moisture Sensitivity Level	Level 1

High Temperature Manual Soldering

Note:Temperature shown are applied to body of device

260℃ Max for 10 seconds Max, 4 times Max

Unikeyic Electronics

Global Electronic Components Distributor

Click to view pricing, inventory, delivery, and lifecycle information:

JYEG:

JYD5A1Z2C4-10-27.000000 JYOD2H7H3C5Y-25.000000 JYD3A1C7G5-14-26.000000
JYD5A1E7G8-18-25.000000 JYD5A1G3D9-13-25.000000 JYOD7E7G3C5Y-12.288000
JYD2A1G3D9-10-25.000000 JYD3A1Z3E4-10-32.000000 JYD5A1C7GZ-20-9.830400
JYOD5H7G3C5Y-25.000000 JYOD7H7G3C5Y-10.000000 JYD3A1C7G6-9-32.000000
JYD5A1C2C4-10-12.288000 JYD5A1C5G5-10-25.000000 JYD5A1G7G6-20-25.000000
JYD5A1G7GZ-18-25.000000 JYGD3A1E7G8-18-12.288000 JYGD5A1E7G6-18-9.830400
JYGD5A1G3D8-18-9.830400 JYD2A1G7G9-18-25.000000 JYD5A1C7GZ-12-13.225625
JYD5A1Z7GZ-20-25.000000 JYD7A1C7G8-20-10.000000 JYGD5A1E1B6-18-25.000000
JYGD5A1E3D6-20-25.000000 JYD3A1C2C4-10-32.000000 JYD5A1G7G8-20-10.000000
JYGD3A1G2C8-10-26.000000 JYD2A1Z3F4-10-25.000000 JYD5A1G7G8-20-25.000000