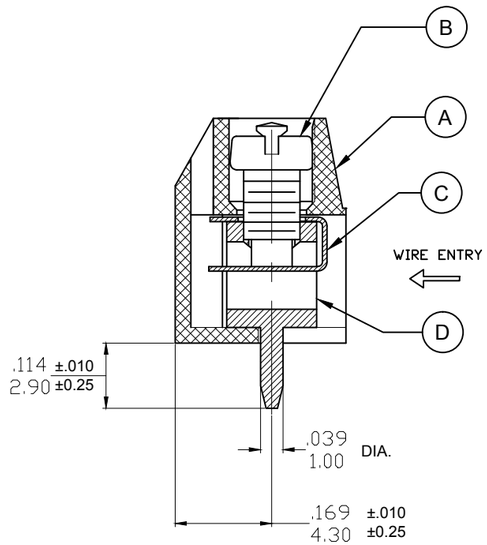

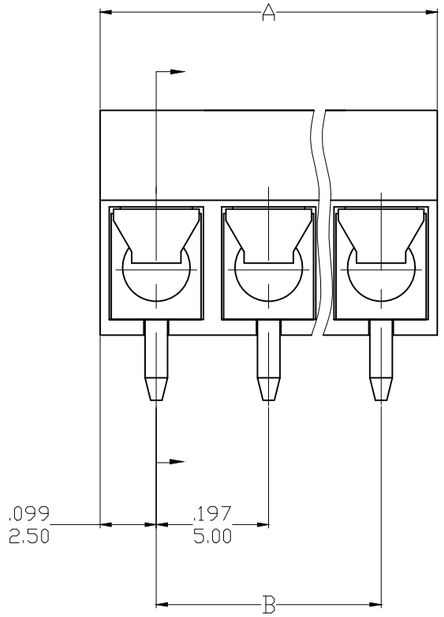

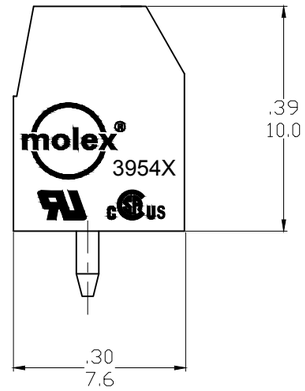

SPECIFICATIONS

1.Material:

A. Body: Nylon (PA66), UL94 V-0, color: see sheet 2
B. Screw: Steel, M2.5, Zinc plated
C. Contact: Brass, Nickel plated
D. Terminal block: Brass, Tin Plated

2. Wire Rating: 22-14 AWG
3. Electrical rating: 300V,10A
4. Power-Frequency withstand: AC 2500V/1min
5. Insulation resistance: DC500V 500MΩ or above
6. Rated impulse voltage: 4000V/minus and plus 5 times each.
7. Wire strip length: .28 (7.0mm.)
8. Screw Torque (max): 3.0 lbf.in(or 0.34 N.m).
9. Operating temperature: -40°to+105° C
10. Number of circuits: 2 to 24, see sheet 2

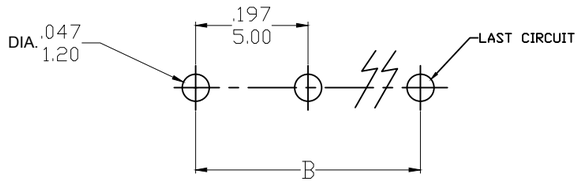

Reference PCB Hole

TOLERANCES			
MM	TOL	INCH	TOL
0-6	±0.25	0-.24	±.010
>6-30	±0.40	.24-1.18	±.016
>30-120	±0.50	1.18-4.76	±.020
>120	±0.80	>4.76	±.031

REVISED DOC TOL — 4/5/17
EC NO: IPG2017-0881
DRWN: ABENJAMI
CH'KD: —
APPR: BRUPERT 2016/05/05
DESCRIPTION
REV
B1

QUALITY SYMBOLS
▼=0
Ⓒ=0

GENERAL TOLERANCES (UNLESS SPECIFIED)

	mm	INCH
4 PLACES	±---	±---
3 PLACES	±---	±---
2 PLACES	±---	±---
1 PLACE	±---	±---

ANGULAR ±---°

DRAFT WHERE APPLICABLE MUST REMAIN WITHIN DIMENSIONS

DIMENSION STYLE: IN/MM
SCALE: 4:1
DESIGN UNITS: METRIC
THIRD ANGLE PROJECTION

DRAWN BY: RSTONE — DATE: 2016/04/19
CHECKED BY: ---- — DATE: ----
APPROVED BY: BRUPERT — DATE: 2016/05/05

TITLE: EURO TERMINAL BLOCK 5.00MM (.197) PITCH PC MOUNT, LOW PROFILE

MOLEX INCORPORATED

MATERIAL NO.: SEE SHEET 2
DOCUMENT NO.: SD-39543-004
SHEET NO.: 1 OF 2

SIZE: B

THIS DRAWING CONTAINS INFORMATION THAT IS PROPRIETARY TO MOLEX INCORPORATED AND SHOULD NOT BE USED WITHOUT WRITTEN PERMISSION

	MATERIAL NUMBERS MOLDED TO LENGTH						DIMENSIONS			
	BLACK			GREEN						
	PRINTING OPTIONS			PRINTING OPTIONS						
CIRCUITS	NONE	10A	11A	NONE	10A	11A	A IN	mm	B IN	mm
2	395430602	395431602	395432602	395930602	395931602	395932602	.39	10.0	.197	5.00
3	395430603	395431603	395432603	395930603	395931603	395932603	.59	15.0	.394	10.00
4	395430604	395431604	395432604	395930604	395931604	395932604	.79	20.0	.591	15.00
5	395430605	395431605	395432605	395930605	395931605	395932605	.98	25.0	.787	20.00
6	395430606	395431606	395432606	395930606	395931606	395932606	1.18	30.0	.984	25.00
7	395430607	395431607	395432607	395930607	395931607	395932607	1.38	35.0	1.181	30.00
8	395430608	395431608	395432608	395930608	395931608	395932608	1.57	40.0	1.378	35.00
9	395430609	395431609	395432609	395930609	395931609	395932609	1.77	45.0	1.575	40.00
10	395430610	395431610	395432610	395930610	395931610	395932610	1.97	50.0	1.772	45.00
11	395430611	395431611	395432611	395930611	395931611	395932611	2.17	55.0	1.969	50.00
12	395430612	395431612	395432612	395930612	395931612	395932612	2.36	60.0	2.165	55.00
13	395430613	395431613	395432613	395930613	395931613	395932613	2.56	65.0	2.362	60.00
14	395430614	395431614	395432614	395930614	395931614	395932614	2.76	70.0	2.559	65.00
15	395430615	395431615	395432615	395930615	395931615	395932615	2.95	75.0	2.756	70.00
16	395430616	395431616	395432616	395930616	395931616	395932616	3.15	80.0	2.953	75.00
17	395430617	395431617	395432617	395930617	395931617	395932617	3.35	85.0	3.150	80.00
18	395430618	395431618	395432618	395930618	395931618	395932618	3.54	90.0	3.346	85.00
19	395430619	395431619	395432619	395930619	395931619	395932619	3.74	95.0	3.543	90.00
20	395430620	395431620	395432620	395930620	395931620	395932620	3.94	100.0	3.740	95.00
21	395430621	395431621	395432621	395930621	395931621	395932621	4.13	105.0	3.937	100.00
22	395430622	395431622	395432622	395930622	395931622	395932622	4.33	110.0	4.134	105.00
23	395430623	395431623	395432623	395930623	395931623	395932623	4.53	115.0	4.331	110.00
24	395430624	395431624	395432624	395930624	395931624	395932624	4.72	120.0	4.528	115.00

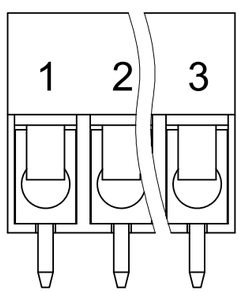

REF. 10A PRINT OPT.

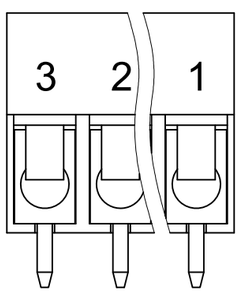

REF. 11A PRINT OPT.

TOLERANCES			
MM	TOL	INCH	TOL
0-6	±0.25	0-.24	±.010
>6-30	±0.40	.24-1.18	±.016
>30-120	±0.50	1.18-4.76	±.020
>120	±0.80	>4.76	±.031

REVISED DOC TOL 4/5/17 — 2016/05/05
EC NO: IPG2017-0881
DRWN: ABENJAMI
CH'KD: —
APPR: BRUPERT

DESCRIPTION

REV B1

QUALITY SYMBOLS
▼=0
Ⓒ=0

GENERAL TOLERANCES (UNLESS SPECIFIED)

	mm	INCH
4 PLACES	±---	±---
3 PLACES	±---	±---
2 PLACES	±---	±---
1 PLACE	±---	±---

ANGULAR ±---°

DRAFT WHERE APPLICABLE MUST REMAIN WITHIN DIMENSIONS

DIMENSION STYLE: IN/MM
SCALE: 4:1
DESIGN UNITS: METRIC
THIRD ANGLE PROJECTION

DRAWN BY: RSTONE DATE: 2016/04/19
CHECKED BY: ---- DATE: ----
APPROVED BY: BRUPERT DATE: 2016/05/05

TITLE: EURO TERMINAL BLOCK 5.00MM (.197) PITCH PC MOUNT, LOW PROFILE

molex MOLEX INCORPORATED

MATERIAL NO.: SEE TABLE
DOCUMENT NO.: SD-39543-004
SHEET NO.: 2 OF 2

SIZE B

THIS DRAWING CONTAINS INFORMATION THAT IS PROPRIETARY TO MOLEX INCORPORATED AND SHOULD NOT BE USED WITHOUT WRITTEN PERMISSION

Description	Circuit size	Material Numbers						Dimensional Information			
		Black			Green						
		100% Tin			100% Tin						
		Printing Options			Printing Options			Dim. A		Dim B	
		None	10A	11A	None	10A	11A	mm	inch	mm	inch
5.0mm, Euro Block, PC Mount, Vertical, Low Profile	2	395430602	395431602	395432602	395930602	395931602	395932602	10.00	0.394	5.00	0.197
5.0mm, Euro Block, PC Mount, Vertical, Low Profile	3	395430603	395431603	395432603	395930603	395931603	395932603	15.00	0.591	10.00	0.394
5.0mm, Euro Block, PC Mount, Vertical, Low Profile	4	395430604	395431604	395432604	395930604	395931604	395932604	20.00	0.787	15.00	0.591
5.0mm, Euro Block, PC Mount, Vertical, Low Profile	5	395430605	395431605	395432605	395930605	395931605	395932605	25.00	0.984	20.00	0.787
5.0mm, Euro Block, PC Mount, Vertical, Low Profile	6	395430606	395431606	395432606	395930606	395931606	395932606	30.00	1.181	25.00	0.984
5.0mm, Euro Block, PC Mount, Vertical, Low Profile	7	395430607	395431607	395432607	395930607	395931607	395932607	35.00	1.378	30.00	1.181
5.0mm, Euro Block, PC Mount, Vertical, Low Profile	8	395430608	395431608	395432608	395930608	395931608	395932608	40.00	1.575	35.00	1.378
5.0mm, Euro Block, PC Mount, Vertical, Low Profile	9	395430609	395431609	395432609	395930609	395931609	395932609	45.00	1.772	40.00	1.575
5.0mm, Euro Block, PC Mount, Vertical, Low Profile	10	395430610	395431610	395432610	395930610	395931610	395932610	50.00	1.969	45.00	1.772
5.0mm, Euro Block, PC Mount, Vertical, Low Profile	11	395430611	395431611	395432611	395930611	395931611	395932611	55.00	2.165	50.00	1.969
5.0mm, Euro Block, PC Mount, Vertical, Low Profile	12	395430612	395431612	395432612	395930612	395931612	395932612	60.00	2.362	55.00	2.165
5.0mm, Euro Block, PC Mount, Vertical, Low Profile	13	395430613	395431613	395432613	395930613	395931613	395932613	65.00	2.559	60.00	2.362
5.0mm, Euro Block, PC Mount, Vertical, Low Profile	14	395430614	395431614	395432614	395930614	395931614	395932614	70.00	2.756	65.00	2.559
5.0mm, Euro Block, PC Mount, Vertical, Low Profile	15	395430615	395431615	395432615	395930615	395931615	395932615	75.00	2.953	70.00	2.756
5.0mm, Euro Block, PC Mount, Vertical, Low Profile	16	395430616	395431616	395432616	395930616	395931616	395932616	80.00	3.150	75.00	2.953
5.0mm, Euro Block, PC Mount, Vertical, Low Profile	17	395430617	395431617	395432617	395930617	395931617	395932617	85.00	3.346	80.00	3.150
5.0mm, Euro Block, PC Mount, Vertical, Low Profile	18	395430618	395431618	395432618	395930618	395931618	395932618	90.00	3.543	85.00	3.346
5.0mm, Euro Block, PC Mount, Vertical, Low Profile	19	395430619	395431619	395432619	395930619	395931619	395932619	95.00	3.740	90.00	3.543
5.0mm, Euro Block, PC Mount, Vertical, Low Profile	20	395430620	395431620	395432620	395930620	395931620	395932620	100.00	3.937	95.00	3.740
5.0mm, Euro Block, PC Mount, Vertical, Low Profile	21	395430621	395431621	395432621	395930621	395931621	395932621	105.00	4.134	100.00	3.937
5.0mm, Euro Block, PC Mount, Vertical, Low Profile	22	395430622	395431622	395432622	395930622	395931622	395932622	110.00	4.331	105.00	4.134
5.0mm, Euro Block, PC Mount, Vertical, Low Profile	23	395430623	395431623	395432623	395930623	395931623	395932623	115.00	4.528	110.00	4.331
5.0mm, Euro Block, PC Mount, Vertical, Low Profile	24	395430624	395431624	395432624	395930624	395931624	395932624	120.00	4.724	115.00	4.528

TOLERANCES			
MM	TOL	INCH	TOL
0-6	±0.25	0-.24	±.010
>6-30	±0.40	.24-1.18	±.016
>30-120	±0.50	1.18-4.76	±.020
>120	±0.80	>4.76	±.031

REVISED DOC TOL
EC NO: IPG2017-0881 2017/03/22
DRWN:ABENJAMINLW 2017/04/18
CHKD:
APPR:BRUPERT
DESCRIPTION

A1
REV

QUALITY SYMBOLS
▼=0
▽=0

GENERAL TOLERANCES (UNLESS SPECIFIED)

	mm	INCH
4 PLACES	± ---	± ---
3 PLACES	± ---	± ---
2 PLACES	± ---	± ---
1 PLACE	± ---	± ---
ANGULAR ±---°		

DRAFT WHERE APPLICABLE MUST REMAIN WITHIN DIMENSIONS

DIMENSION STYLE: MM/IN
SCALE
DESIGN UNITS: INCH
THIRD ANGLE PROJECTION

DRAWN BY: LROTHAUS DATE: 12/6/05
CHECKED BY: C. YORK DATE: 01/05/06
APPROVED BY: DATE

TITLE: 5.0MM, EURO TERM. BLOCK VERTICAL, PC MOUNT, LOW PROFILE

MOLEX INCORPORATED

MATERIAL NO.: SEE CHART
DOCUMENT NO.: SD-39543-004
SHEET NO.: 2 OF 2

SIZE: B

THIS DRAWING CONTAINS INFORMATION THAT IS PROPRIETARY TO MOLEX INCORPORATED AND SHOULD NOT BE USED WITHOUT WRITTEN PERMISSION

Description	Circuit size	Material Numbers						Dimensional Information			
		Black			Green						
		100% Tin			100% Tin						
		Printing Options			Printing Options			Dim. A		Dim B	
		None	10A	11A	None	10A	11A	mm	inch	mm	inch
5.0mm, Euro Block, PC Mount, Vertical, Low Profile	2	395430602	395431602	395432602	395930602	395931602	395932602	10.00	0.394	5.00	0.197
5.0mm, Euro Block, PC Mount, Vertical, Low Profile	3	395430603	395431603	395432603	395930603	395931603	395932603	15.00	0.591	10.00	0.394
5.0mm, Euro Block, PC Mount, Vertical, Low Profile	4	395430604	395431604	395432604	395930604	395931604	395932604	20.00	0.787	15.00	0.591
5.0mm, Euro Block, PC Mount, Vertical, Low Profile	5	395430605	395431605	395432605	395930605	395931605	395932605	25.00	0.984	20.00	0.787
5.0mm, Euro Block, PC Mount, Vertical, Low Profile	6	395430606	395431606	395432606	395930606	395931606	395932606	30.00	1.181	25.00	0.984
5.0mm, Euro Block, PC Mount, Vertical, Low Profile	7	395430607	395431607	395432607	395930607	395931607	395932607	35.00	1.378	30.00	1.181
5.0mm, Euro Block, PC Mount, Vertical, Low Profile	8	395430608	395431608	395432608	395930608	395931608	395932608	40.00	1.575	35.00	1.378
5.0mm, Euro Block, PC Mount, Vertical, Low Profile	9	395430609	395431609	395432609	395930609	395931609	395932609	45.00	1.772	40.00	1.575
5.0mm, Euro Block, PC Mount, Vertical, Low Profile	10	395430610	395431610	395432610	395930610	395931610	395932610	50.00	1.969	45.00	1.772
5.0mm, Euro Block, PC Mount, Vertical, Low Profile	11	395430611	395431611	395432611	395930611	395931611	395932611	55.00	2.165	50.00	1.969
5.0mm, Euro Block, PC Mount, Vertical, Low Profile	12	395430612	395431612	395432612	395930612	395931612	395932612	60.00	2.362	55.00	2.165
5.0mm, Euro Block, PC Mount, Vertical, Low Profile	13	395430613	395431613	395432613	395930613	395931613	395932613	65.00	2.559	60.00	2.362
5.0mm, Euro Block, PC Mount, Vertical, Low Profile	14	395430614	395431614	395432614	395930614	395931614	395932614	70.00	2.756	65.00	2.559
5.0mm, Euro Block, PC Mount, Vertical, Low Profile	15	395430615	395431615	395432615	395930615	395931615	395932615	75.00	2.953	70.00	2.756
5.0mm, Euro Block, PC Mount, Vertical, Low Profile	16	395430616	395431616	395432616	395930616	395931616	395932616	80.00	3.150	75.00	2.953
5.0mm, Euro Block, PC Mount, Vertical, Low Profile	17	395430617	395431617	395432617	395930617	395931617	395932617	85.00	3.346	80.00	3.150
5.0mm, Euro Block, PC Mount, Vertical, Low Profile	18	395430618	395431618	395432618	395930618	395931618	395932618	90.00	3.543	85.00	3.346
5.0mm, Euro Block, PC Mount, Vertical, Low Profile	19	395430619	395431619	395432619	395930619	395931619	395932619	95.00	3.740	90.00	3.543
5.0mm, Euro Block, PC Mount, Vertical, Low Profile	20	395430620	395431620	395432620	395930620	395931620	395932620	100.00	3.937	95.00	3.740
5.0mm, Euro Block, PC Mount, Vertical, Low Profile	21	395430621	395431621	395432621	395930621	395931621	395932621	105.00	4.134	100.00	3.937
5.0mm, Euro Block, PC Mount, Vertical, Low Profile	22	395430622	395431622	395432622	395930622	395931622	395932622	110.00	4.331	105.00	4.134
5.0mm, Euro Block, PC Mount, Vertical, Low Profile	23	395430623	395431623	395432623	395930623	395931623	395932623	115.00	4.528	110.00	4.331
5.0mm, Euro Block, PC Mount, Vertical, Low Profile	24	395430624	395431624	395432624	395930624	395931624	395932624	120.00	4.724	115.00	4.528

TOLERANCES			
MM	TOL	INCH	TOL
0-6	±0.25	0-.24	±.010
>6-30	±0.40	.24-1.18	±.016
>30-120	±0.50	1.18-4.76	±.020
>120	±0.80	>4.76	±.031

REVISED DOC TOL
EC NO: IPG2017-0881 2017/03/22
DRWN:ABENJAMINLW 2017/04/18
CHKD:
APPR:BRUPERT
DESCRIPTION

A1
REV

QUALITY SYMBOLS
▼=0
▽=0

GENERAL TOLERANCES (UNLESS SPECIFIED)

	mm	INCH
4 PLACES	± ---	± ---
3 PLACES	± ---	± ---
2 PLACES	± ---	± ---
1 PLACE	± ---	± ---
ANGULAR ±---°		

DRAFT WHERE APPLICABLE MUST REMAIN WITHIN DIMENSIONS

DIMENSION STYLE: MM/IN
SCALE
DESIGN UNITS: INCH
THIRD ANGLE PROJECTION

DRAWN BY: LROTHAUS DATE: 12/6/05
CHECKED BY: C. YORK DATE: 01/05/06
APPROVED BY: DATE

TITLE: 5.0MM, EURO TERM. BLOCK VERTICAL, PC MOUNT, LOW PROFILE

MOLEX INCORPORATED

MATERIAL NO.: SEE CHART
DOCUMENT NO.: SD-39543-004
SHEET NO.: 2 OF 2

SIZE: B

THIS DRAWING CONTAINS INFORMATION THAT IS PROPRIETARY TO MOLEX INCORPORATED AND SHOULD NOT BE USED WITHOUT WRITTEN PERMISSION