MC14511B

BCD-To-Seven Segment Latch/Decoder/Driver

The MC14511B BCD–to–seven segment latch/decoder/driver is constructed with complementary MOS (CMOS) enhancement mode devices and NPN bipolar output drivers in a single monolithic structure. The circuit provides the functions of a 4–bit storage latch, an 8421 BCD–to–seven segment decoder, and an output drive capability. Lamp test ($\overline{LT}$), blanking ($\overline{BI}$), and latch enable (LE) inputs are used to test the display, to turn–off or pulse modulate the brightness of the display, and to store a BCD code, respectively. It can be used with seven–segment light–emitting diodes (LED), incandescent, fluorescent, gas discharge, or liquid crystal readouts either directly or indirectly.

Applications include instrument (e.g., counter, DVM, etc.) display driver, computer/calculator display driver, cockpit display driver, and various clock, watch, and timer uses.

Features

- Low Logic Circuit Power Dissipation
- High–Current Sourcing Outputs (Up to 25 mA)
- Latch Storage of Code
- Blanking Input
- Lamp Test Provision
- Readout Blanking on all Illegal Input Combinations
- Lamp Intensity Modulation Capability
- Time Share (Multiplexing) Facility
- Supply Voltage Range = 3.0 V to 18 V
- Capable of Driving Two Low–power TTL Loads, One Low–power Schottky TTL Load, or Two HTL Loads Over the Rated Temperature Range
- Chip Complexity: 216 FETs or 54 Equivalent Gates
- Triple Diode Protection on all Inputs
- Pb–Free Packages are Available*

MAXIMUM RATINGS (Voltages Referenced to V_{SS}) (Note 1)

Symbol	Parameter	Value	Unit
V_{DD}	DC Supply Voltage Range	–0.5 to +18.0	V
V_{in}	Input Voltage Range, All Inputs	–0.5 to V_{DD} + 0.5	V
I	DC Current Drain per Input Pin	10	mA
P_D	Power Dissipation, per Package (Note 2)	500	mW
T_A	Operating Temperature Range	–55 to +125	°C
T_{stg}	Storage Temperature Range	–65 to +150	°C
I_{OHmax}	Maximum Output Drive Current (Source) per Output	25	mA
P_{OHmax}	Maximum Continuous Output Power (Source) per Output (Note 3)	50	mA

1. Maximum Ratings are those values beyond which damage to the device may occur.
2. Temperature Derating:
   Plastic “P and D/DW” Packages: – 7.0 mW/°C From 65°C to 125°C
3. $P_{OHmax} = I_{OH} (V_{DD} - V_{OH})$

ON Semiconductor®

http://onsemi.com

MARKING DIAGRAMS

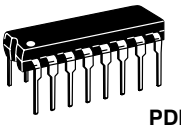

PDIP–16
P SUFFIX
CASE 648



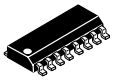

SO–16
D SUFFIX
CASE 751B

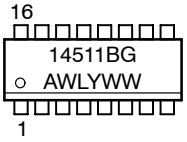

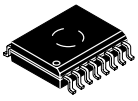

SO–16
DW SUFFIX
CASE 751G

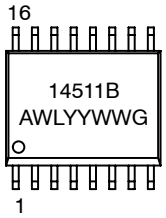

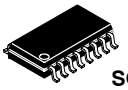

SOEIAJ–16
F SUFFIX
CASE 966

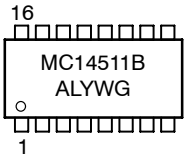

A = Assembly Location
WL, L = Wafer Lot
YY, Y = Year
WW, W = Work Week
G = Pb–Free Package

ORDERING INFORMATION

See detailed ordering and shipping information in the package dimensions section on page 7 of this data sheet.

*For additional information on our Pb–Free strategy and soldering details, please download the ON Semiconductor Soldering and Mounting Techniques Reference Manual, SOLDERRM/D.

© Semiconductor Components Industries, LLC, 2006

This device contains protection circuitry to protect the inputs against damage due to high static voltages or electric fields. However, it is advised that normal precautions be taken to avoid application of any voltage higher than maximum rated voltages to this high−impedance circuit. A destructive high current mode may occur if V_{in} and V_{out} are not constrained to the range $V_{SS} \le (V_{in}$ or $V_{out}) \le V_{DD}$.

Due to the sourcing capability of this circuit, damage can occur to the device if V_{DD} is applied, and the outputs are shorted to V_{SS} and are at a logical 1 (See Maximum Ratings).

Unused inputs must always be tied to an appropriate logic voltage level (e.g., either V_{SS} or V_{DD}).

PIN ASSIGNMENT

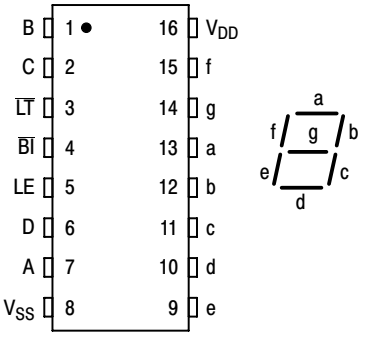

DISPLAY

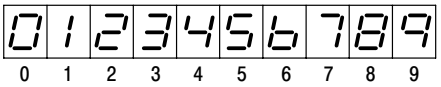

TRUTH TABLE

Inputs							Outputs							
LE	**BI**	**LT**	**D**	**C**	**B**	**A**	**a**	**b**	**c**	**d**	**e**	**f**	**g**	**Display**
X	X	0	X	X	X	X	1	1	1	1	1	1	1	8
X	0	1	X	X	X	X	0	0	0	0	0	0	0	Blank
0	1	1	0	0	0	0	1	1	1	1	1	1	0	0
0	1	1	0	0	0	1	0	1	1	0	0	0	0	1
0	1	1	0	0	1	0	1	1	0	1	1	0	1	2
0	1	1	0	0	1	1	1	1	1	1	0	0	1	3
0	1	1	0	1	0	0	0	1	1	0	0	1	1	4
0	1	1	0	1	0	1	1	0	1	1	0	1	1	5
0	1	1	0	1	1	0	0	0	1	1	1	1	1	6
0	1	1	0	1	1	1	1	1	1	0	0	0	0	7
0	1	1	1	0	0	0	1	1	1	1	1	1	1	8
0	1	1	1	0	0	1	1	1	1	0	0	1	1	9
0	1	1	1	0	1	0	0	0	0	0	0	0	0	Blank
0	1	1	1	0	1	1	0	0	0	0	0	0	0	Blank
0	1	1	1	1	0	0	0	0	0	0	0	0	0	Blank
0	1	1	1	1	0	1	0	0	0	0	0	0	0	Blank
0	1	1	1	1	1	0	0	0	0	0	0	0	0	Blank
0	1	1	1	1	1	1	0	0	0	0	0	0	0	Blank
1	1	1	X	X	X	X				*				*

X = Don't Care

*Depends upon the BCD code previously applied when LE = 0

ELECTRICAL CHARACTERISTICS (Voltages Referenced to V_{SS})

Characteristic	Symbol	V_{DD} Vdc	– 55°C Min	– 55°C Max	25°C Min	25°C Typ (Note 4)	25°C Max	125°C Min	125°C Max	Unit
Output Voltage "0" Level V_{in} = V_{DD} or 0	V_{OL}	5.0 10 15	– – –	0.05 0.05 0.05	– – –	0 0 0	0.05 0.05 0.05	– – –	0.05 0.05 0.05	Vdc
"1" Level V_{in} = 0 or V_{DD}	V_{OH}	5.0 10 15	4.1 9.1 14.1	– – –	4.1 9.1 14.1	4.57 9.58 14.59	– – –	4.1 9.1 14.1	– – –	Vdc
Input Voltage # "0" Level (V_O = 3.8 or 0.5 Vdc) (V_O = 8.8 or 1.0 Vdc) (V_O = 13.8 or 1.5 Vdc)	V_{IL}	5.0 10 15	– – –	1.5 3.0 4.0	– – –	2.25 4.50 6.75	1.5 3.0 4.0	– – –	1.5 3.0 4.0	Vdc
"1" Level (V_O = 0.5 or 3.8 Vdc) (V_O = 1.0 or 8.8 Vdc) (V_O = 1.5 or 13.8 Vdc)	V_{IH}	5.0 10 15	3.5 7.0 11	– – –	3.5 7.0 11	2.75 5.50 8.25	– – –	3.5 7.0 11	– – –	Vdc
Output Drive Voltage (I_{OH} = 0 mA) Source	V_{OH}	5.0	4.1	–	4.1	4.57	–	4.1	–	Vdc
(I_{OH} = 5.0 mA)			–	–	–	4.24	–	–	–	
(I_{OH} = 10 mA)			3.9	–	3.9	4.12	–	3.5	–	
(I_{OH} = 15 mA)			–	–	–	3.94	–	–	–	
(I_{OH} = 20 mA)			3.4	–	3.4	3.70	–	3.0	–	
(I_{OH} = 25 mA)			–	–	–	3.54	–	–	–	
(I_{OH} = 0 mA)		10	9.1	–	9.1	9.58	–	9.1	–	Vdc
(I_{OH} = 5.0 mA)			–	–	–	9.26	–	–	–	
(I_{OH} = 10 mA)			9.0	–	9.0	9.17	–	8.6	–	
(I_{OH} = 15 mA)			–	–	–	9.04	–	–	–	
(I_{OH} = 20 mA)			8.6	–	8.6	8.90	–	8.2	–	
(I_{OH} = 25 mA)			–	–	–	8.70	–	–	–	
(I_{OH} = 0 mA)		15	14.1	–	14.1	14.59	–	14.1	–	Vdc
(I_{OH} = 5.0 mA)			–	–	–	14.27	–	–	–	
(I_{OH} = 10 mA)			14	–	14	14.18	–	13.6	–	
(I_{OH} = 15 mA)			–	–	–	14.07	–	–	–	
(I_{OH} = 20 mA)			13.6	–	13.6	13.95	–	13.2	–	
(I_{OH} = 25 mA)			–	–	–	13.70	–	–	–	
Output Drive Current (V_{OL} = 0.4 V) Sink	I_{OL}	5.0	0.64	–	0.51	0.88	–	0.36	–	mAdc
(V_{OL} = 0.5 V)		10	1.6	–	1.3	2.25	–	0.9	–	
(V_{OL} = 1.5 V)		15	4.2	–	3.4	8.8	–	2.4	–	
Input Current	I_{in}	15	–	± 0.1	–	±0.00001	± 0.1	–	± 1.0	μAdc
Input Capacitance	C_{in}	–	–	–	–	5.0	7.5	–	–	pF
Quiescent Current (Per Package) V_{in} = 0 or V_{DD}, I_{out} = 0 μA	I_{DD}	5.0 10 15	– – –	5.0 10 20	– – –	0.005 0.010 0.015	5.0 10 20	– – –	150 300 600	μAdc
Total Supply Current (Notes 5 & 6) (Dynamic plus Quiescent, Per Package) (C_L = 50 pF on all outputs, all buffers switching)	I_T	5.0 10 15	I_T = (1.9 μA/kHz) f + I_{DD} I_T = (3.8 μA/kHz) f + I_{DD} I_T = (5.7 μA/kHz) f + I_{DD}							μAdc

4. Noise immunity specified for worst−case input combination.
   Noise Margin for both "1" and "0" level =
   1.0 Vdc min @ V_{DD} = 5.0 Vdc
   2.0 Vdc min @ V_{DD} = 10 Vdc
   2.5 Vdc min @ V_{DD} = 15 Vdc
5. The formulas given are for the typical characteristics only at 25°C.
6. To calculate total supply current at loads other than 50 pF:

$$I_T(C_L) = I_T(50\ pF) + 3.5 \times 10^{-3} (C_L - 50)\ V_{DD} f$$

where: I_T is in μA (per package), C_L in pF, V_{DD} in Vdc, and f in kHz is input frequency.

SWITCHING CHARACTERISTICS (Note 7) (C_L = 50 pF, T_A = 25°C)

Characteristic	Symbol	V_{DD} Vdc	Min	Typ	Max	Unit
Output Rise Time t_{TLH} = (0.40 ns/pF) C_L + 20 ns t_{TLH} = (0.25 ns/pF) C_L + 17.5 ns t_{TLH} = (0.20 ns/pF) C_L + 15 ns	t_{TLH}	 5.0 10 15	 – – –	 40 30 25	 80 60 50	ns
Output Fall Time t_{THL} = (1.5 ns/pF) C_L + 50 ns t_{THL} = (0.75 ns/pF) C_L + 37.5 ns t_{THL} = (0.55 ns/pF) C_L + 37.5 ns	t_{THL}	 5.0 10 15	 – – –	 125 75 65	 250 150 130	ns
Data Propagation Delay Time t_{PLH} = (0.40 ns/pF) C_L + 620 ns t_{PLH} = (0.25 ns/pF) C_L + 237.5 ns t_{PLH} = (0.20 ns/pF) C_L + 165 ns	t_{PLH}	 5.0 10 15	 – – –	 640 250 175	 1280 500 350	ns
t_{PHL} = (1.3 ns/pF) C_L + 655 ns t_{PHL} = (0.60 ns/pF) C_L + 260 ns t_{PHL} = (0.35 ns/pF) C_L + 182.5 ns	t_{PHL}	5.0 10 15	– – –	720 290 200	1440 580 400	
$\overline{\text{Blank}}$ Propagation Delay Time t_{PLH} = (0.30 ns/pF) C_L + 585 ns t_{PLH} = (0.25 ns/pF) C_L + 187.5 ns t_{PLH} = (0.15 ns/pF) C_L + 142.5 ns	t_{PLH}	 5.0 10 15	 – – –	 600 200 150	 750 300 220	ns
t_{PHL} = (0.85 ns/pF) C_L + 442.5 ns t_{PHL} = (0.45 ns/pF) C_L + 177.5 ns t_{PHL} = (0.35 ns/pF) C_L + 142.5 ns	t_{PHL}	5.0 10 15	– – –	485 200 160	970 400 320	
$\overline{\text{Lamp Test}}$ Propagation Delay Time t_{PLH} = (0.45 ns/pF) C_L + 290.5 ns t_{PLH} = (0.25 ns/pF) C_L + 112.5 ns t_{PLH} = (0.20 ns/pF) C_L + 80 ns	t_{PLH}	 5.0 10 15	 – – –	 313 125 90	 625 250 180	ns
t_{PHL} = (1.3 ns/pF) C_L + 248 ns t_{PHL} = (0.45 ns/pF) C_L + 102.5 ns t_{PHL} = (0.35 ns/pF) C_L + 72.5 ns	t_{PHL}	5.0 10 15	– – –	313 125 90	625 250 180	
Setup Time	t_{su}	5.0 10 15	100 40 30	– – –	– – –	ns
Hold Time	t_h	5.0 10 15	60 40 30	– – –	– – –	ns
Latch Enable Pulse Width	t_{WL}	5.0 10 15	520 220 130	260 110 65	– – –	ns

7. The formulas given are for the typical characteristics only.

Input LE low, and Inputs D, $\overline{BI}$ and $\overline{LT}$ high.
f in respect to a system clock.
All outputs connected to respective C_L loads.

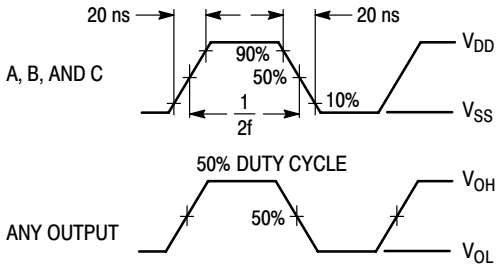

Figure 1. Dynamic Power Dissipation Signal Waveforms

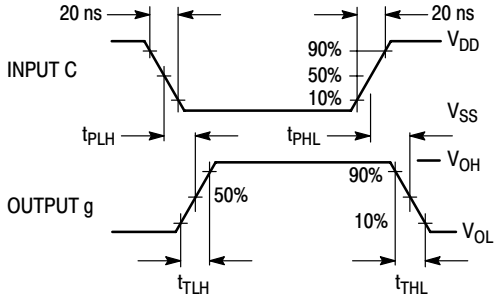

(a) Inputs D and LE low, and Inputs A, B, $\overline{BI}$ and $\overline{LT}$ high.

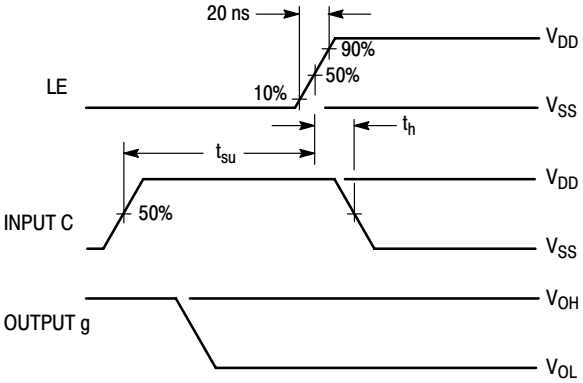

(b) Input D low, Inputs A, B, $\overline{BI}$ and $\overline{LT}$ high.

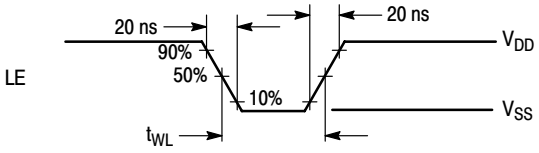

(c) Data DCBA strobed into latches.

Figure 2. Dynamic Signal Waveforms

CONNECTIONS TO VARIOUS DISPLAY READOUTS

LIGHT EMITTING DIODE (LED) READOUT

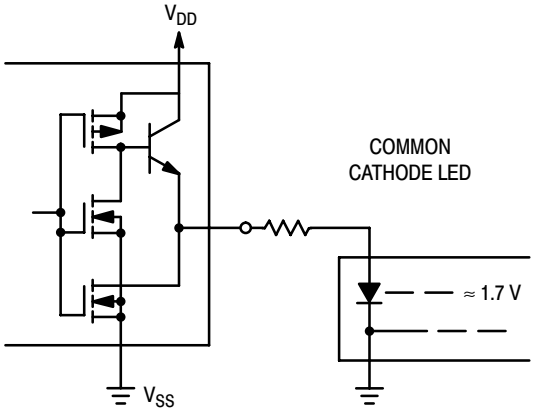

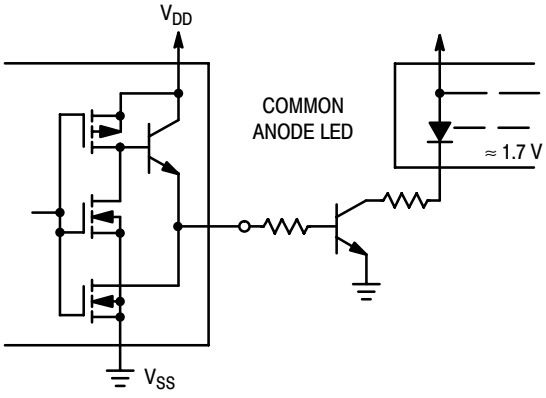

INCANDESCENT READOUT

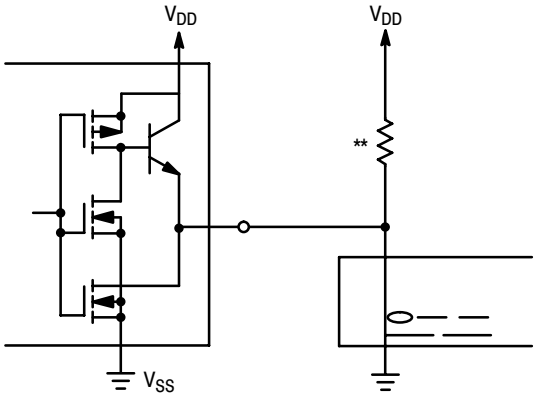

FLUORESCENT READOUT

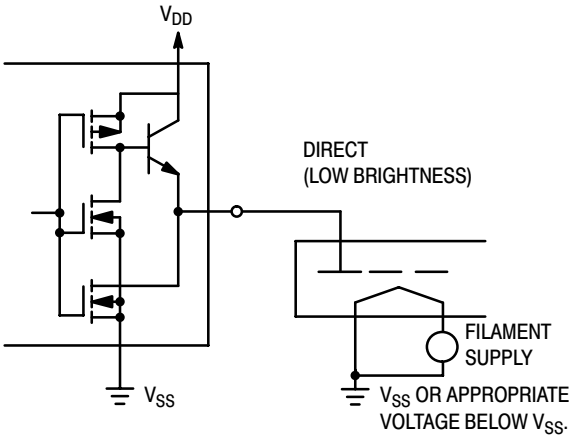

(CAUTION: Maximum working voltage = 18.0 V)

GAS DISCHARGE READOUT

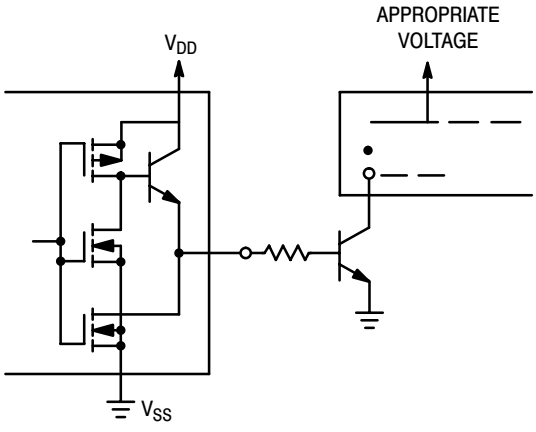

LIQUID CRYSTAL (LCD) READOUT

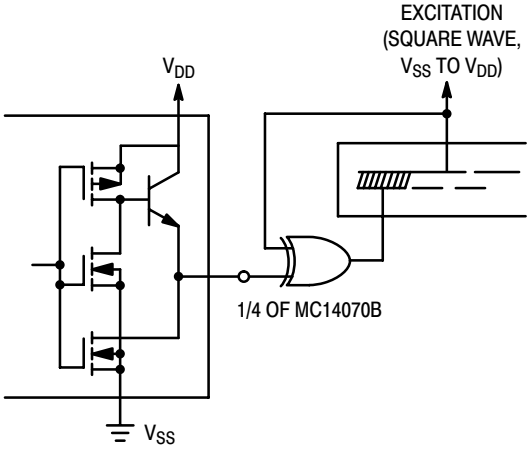

** A filament pre−warm resistor is recommended to reduce filament thermal shock and increase the effective cold resistance of the filament.

Direct DC drive of LCD's not recommended for life of LCD readouts.

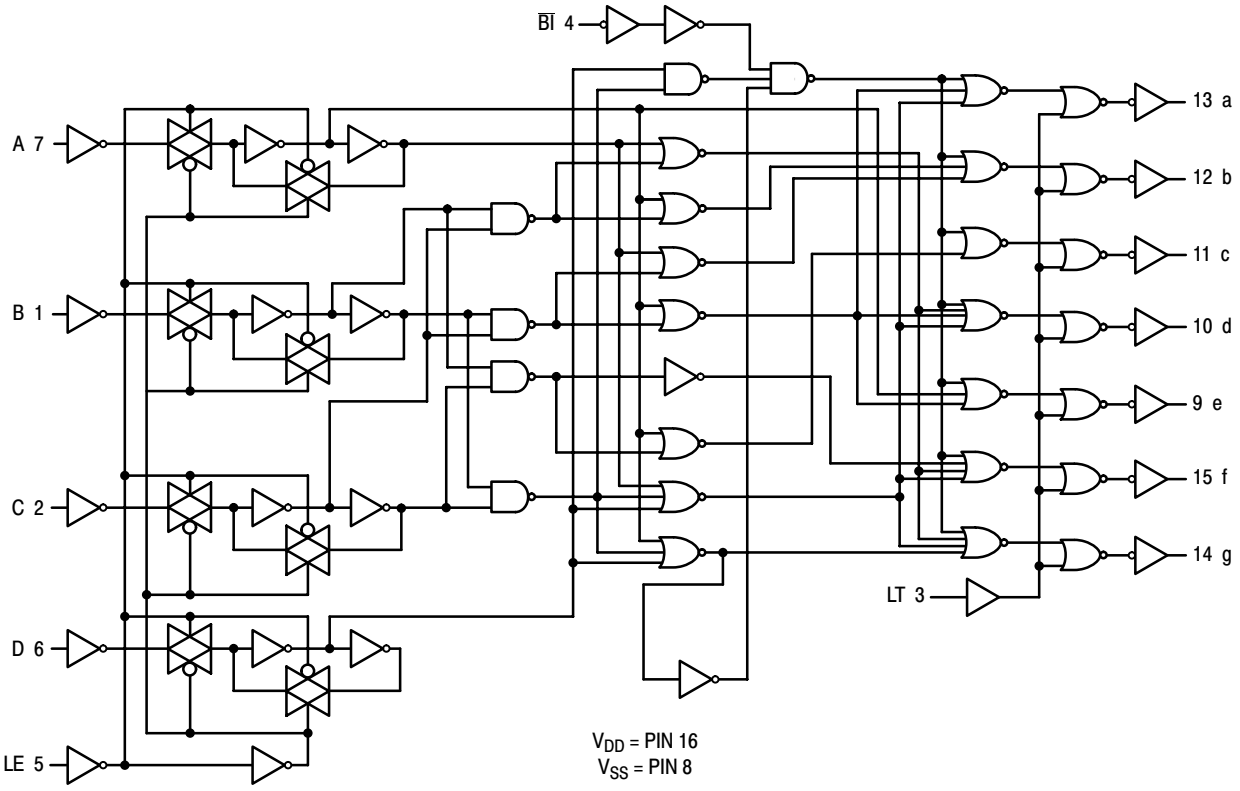

Figure 3. Logic Diagram

ORDERING INFORMATION

Device	Package	Shipping†
MC14511BCP	PDIP−16	500 / Tape & Ammo Box
MC14511BCPG	PDIP−16 (Pb−Free)	500 / Tape & Ammo Box
MC14511BD	SO−16	48 Units / Rail
MC14511BDG	SO−16 (Pb−Free)	48 Units / Rail
MC14511BDW	SO−16	47 Units / Rail
MC14511BDWR2	SO−16 WB	1000 / Tape & Reel
MC14511BDWR2G	SO−16 WB (Pb−Free)	1000 / Tape & Reel
MC14511BF	SOEIAJ−16	50 Units / Rail
MC14511BFG	SOEIAJ−16 (Pb−Free)	50 Units / Rail
MC14511BFEL	SOEIAJ−16	2000 / Tape & Reel
MC14511BFELG	SOEIAJ−16 (Pb−Free)	2000 / Tape & Reel

†For information on tape and reel specifications, including part orientation and tape sizes, please refer to our Tape and Reel Packaging Specifications Brochure, BRD8011/D.

PACKAGE DIMENSIONS

PDIP−16
CASE 648−08
ISSUE T

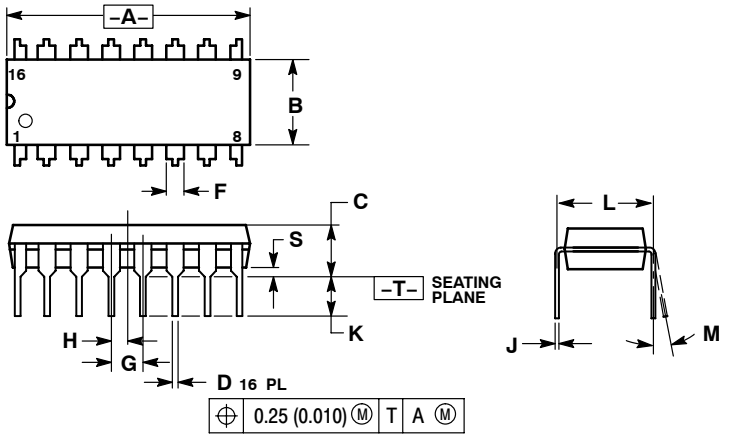

NOTES:
1. DIMENSIONING AND TOLERANCING PER ANSI Y14.5M, 1982.
2. CONTROLLING DIMENSION: INCH.
3. DIMENSION L TO CENTER OF LEADS WHEN FORMED PARALLEL.
4. DIMENSION B DOES NOT INCLUDE MOLD FLASH.
5. ROUNDED CORNERS OPTIONAL.

	INCHES		MILLIMETERS	
DIM	MIN	MAX	MIN	MAX
A	0.740	0.770	18.80	19.55
B	0.250	0.270	6.35	6.85
C	0.145	0.175	3.69	4.44
D	0.015	0.021	0.39	0.53
F	0.040	0.70	1.02	1.77
G	0.100 BSC		2.54 BSC	
H	0.050 BSC		1.27 BSC	
J	0.008	0.015	0.21	0.38
K	0.110	0.130	2.80	3.30
L	0.295	0.305	7.50	7.74
M	0 °	10 °	0 °	10 °
S	0.020	0.040	0.51	1.01

SO−16
D SUFFIX
PLASTIC SOIC PACKAGE
CASE 751B−05
ISSUE J

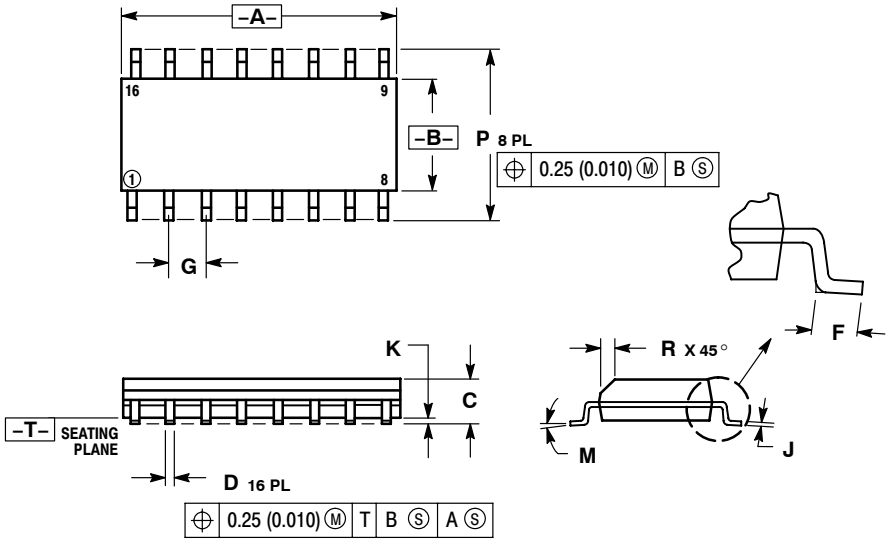

NOTES:
1. DIMENSIONING AND TOLERANCING PER ANSI Y14.5M, 1982.
2. CONTROLLING DIMENSION: MILLIMETER.
3. DIMENSIONS A AND B DO NOT INCLUDE MOLD PROTRUSION.
4. MAXIMUM MOLD PROTRUSION 0.15 (0.006) PER SIDE.
5. DIMENSION D DOES NOT INCLUDE DAMBAR PROTRUSION. ALLOWABLE DAMBAR PROTRUSION SHALL BE 0.127 (0.005) TOTAL IN EXCESS OF THE D DIMENSION AT MAXIMUM MATERIAL CONDITION.

	MILLIMETERS		INCHES	
DIM	MIN	MAX	MIN	MAX
A	9.80	10.00	0.386	0.393
B	3.80	4.00	0.150	0.157
C	1.35	1.75	0.054	0.068
D	0.35	0.49	0.014	0.019
F	0.40	1.25	0.016	0.049
G	1.27 BSC		0.050 BSC	
J	0.19	0.25	0.008	0.009
K	0.10	0.25	0.004	0.009
M	0 °	7 °	0 °	7 °
P	5.80	6.20	0.229	0.244
R	0.25	0.50	0.010	0.019

PACKAGE DIMENSIONS

SO−16 WB
DW SUFFIX
PLASTIC SOIC PACKAGE
CASE 751G−03
ISSUE C

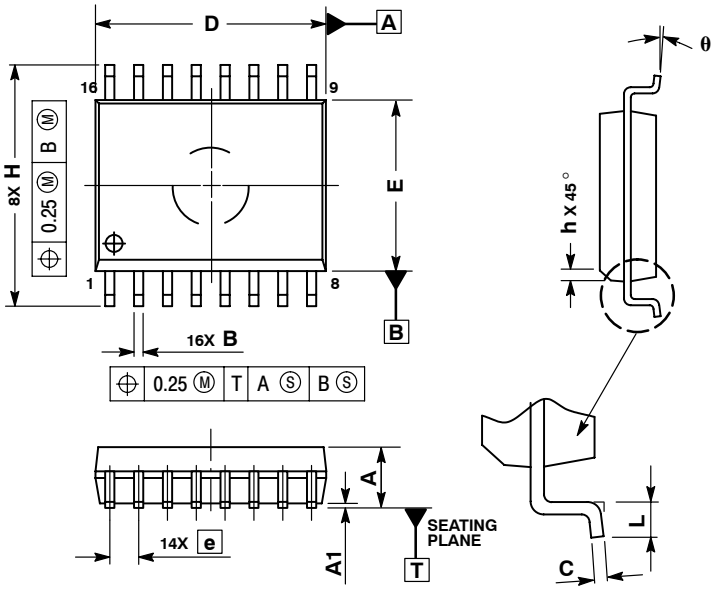

NOTES:
1. DIMENSIONS ARE IN MILLIMETERS.
2. INTERPRET DIMENSIONS AND TOLERANCES PER ASME Y14.5M, 1994.
3. DIMENSIONS D AND E DO NOT INLCUDE MOLD PROTRUSION.
4. MAXIMUM MOLD PROTRUSION 0.15 PER SIDE.
5. DIMENSION B DOES NOT INCLUDE DAMBAR PROTRUSION. ALLOWABLE DAMBAR PROTRUSION SHALL BE 0.13 TOTAL IN EXCESS OF THE B DIMENSION AT MAXIMUM MATERIAL CONDITION.

	MILLIMETERS	
DIM	MIN	MAX
A	2.35	2.65
A1	0.10	0.25
B	0.35	0.49
C	0.23	0.32
D	10.15	10.45
E	7.40	7.60
e	1.27 BSC	
H	10.05	10.55
h	0.25	0.75
L	0.50	0.90
q	0 °	7 °

SOEIAJ−16
CASE 966−01
ISSUE A

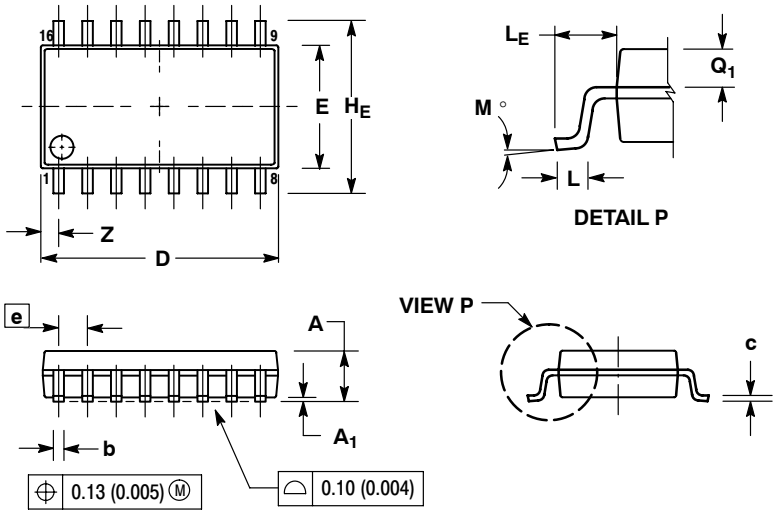

NOTES:
1. DIMENSIONING AND TOLERANCING PER ANSI Y14.5M, 1982.
2. CONTROLLING DIMENSION: MILLIMETER.
3. DIMENSIONS D AND E DO NOT INCLUDE MOLD FLASH OR PROTRUSIONS AND ARE MEASURED AT THE PARTING LINE. MOLD FLASH OR PROTRUSIONS SHALL NOT EXCEED 0.15 (0.006) PER SIDE.
4. TERMINAL NUMBERS ARE SHOWN FOR REFERENCE ONLY.
5. THE LEAD WIDTH DIMENSION (b) DOES NOT INCLUDE DAMBAR PROTRUSION. ALLOWABLE DAMBAR PROTRUSION SHALL BE 0.08 (0.003) TOTAL IN EXCESS OF THE LEAD WIDTH DIMENSION AT MAXIMUM MATERIAL CONDITION. DAMBAR CANNOT BE LOCATED ON THE LOWER RADIUS OR THE FOOT. MINIMUM SPACE BETWEEN PROTRUSIONS AND ADJACENT LEAD TO BE 0.46 (0.018).

	MILLIMETERS		INCHES	
DIM	MIN	MAX	MIN	MAX
A	---	2.05	---	0.081
A_1	0.05	0.20	0.002	0.008
b	0.35	0.50	0.014	0.020
c	0.10	0.20	0.007	0.011
D	9.90	10.50	0.390	0.413
E	5.10	5.45	0.201	0.215
e	1.27 BSC		0.050 BSC	
H_E	7.40	8.20	0.291	0.323
L	0.50	0.85	0.020	0.033
L_E	1.10	1.50	0.043	0.059
M	0 °	10 °	0 °	10 °
Q_1	0.70	0.90	0.028	0.035
Z	---	0.78	---	0.031

ON Semiconductor and ON are registered trademarks of Semiconductor Components Industries, LLC (SCILLC). SCILLC reserves the right to make changes without further notice to any products herein. SCILLC makes no warranty, representation or guarantee regarding the suitability of its products for any particular purpose, nor does SCILLC assume any liability arising out of the application or use of any product or circuit, and specifically disclaims any and all liability, including without limitation special, consequential or incidental damages. "Typical" parameters which may be provided in SCILLC data sheets and/or specifications can and do vary in different applications and actual performance may vary over time. All operating parameters, including "Typicals" must be validated for each customer application by customer's technical experts. SCILLC does not convey any license under its patent rights nor the rights of others. SCILLC products are not designed, intended, or authorized for use as components in systems intended for surgical implant into the body, or other applications intended to support or sustain life, or for any other application in which the failure of the SCILLC product could create a situation where personal injury or death may occur. Should Buyer purchase or use SCILLC products for any such unintended or unauthorized application, Buyer shall indemnify and hold SCILLC and its officers, employees, subsidiaries, affiliates, and distributors harmless against all claims, costs, damages, and expenses, and reasonable attorney fees arising out of, directly or indirectly, any claim of personal injury or death associated with such unintended or unauthorized use, even if such claim alleges that SCILLC was negligent regarding the design or manufacture of the part. SCILLC is an Equal Opportunity/Affirmative Action Employer. This literature is subject to all applicable copyright laws and is not for resale in any manner.

PUBLICATION ORDERING INFORMATION

LITERATURE FULFILLMENT:
Literature Distribution Center for ON Semiconductor
P.O. Box 5163, Denver, Colorado 80217 USA
Phone: 303−675−2175 or 800−344−3860 Toll Free USA/Canada
Fax: 303−675−2176 or 800−344−3867 Toll Free USA/Canada
Email: orderlit@onsemi.com

N. American Technical Support: 800−282−9855 Toll Free USA/Canada
Europe, Middle East and Africa Technical Support:
Phone: 421 33 790 2910
Japan Customer Focus Center
Phone: 81−3−5773−3850

ON Semiconductor Website: **www.onsemi.com**

Order Literature: http://www.onsemi.com/orderlit

For additional information, please contact your local Sales Representative

MC14511B/D

Unikeyic Electronics

Global Electronic Components Distributor

Click to view pricing, inventory, delivery, and lifecycle information:

ON Semiconductor:

CNY17-3V-M FDMS7608S LB1861M-TLM-H SZ1SMA5913BT3G FOD2741AV MC33077DR2G TLV431CSN1T1G LV8014T-TLM-E MC74ACT541DWG NCP1397BDR2G NCV5501DT33RKG UC2845BD1R2G NTBG060N090SC1 NB3N853531EDTG NCP1342ENDCEAD1R2G 1SMA5938BT3G LM393NG MC34152DR2G NCP114AMX250TCG NCS20081MUTAG CS8182YDPSR5G LM385BD-2.5R2G MMBTH81 NC7WV07P6X NCP1566MNTXG FDMA7672 KSA1156OSTSTU LA4440J-E MC74LCX02DTR2G MOC212R2M