FRONT VIEW – FEMALE INSERT

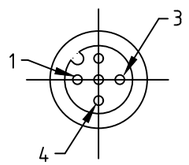

	MATERIAL NUMBER	ENGINEERING NUMBER	FINISHED LENGTH
	1200680195	884A30K05M003	1.0 FT [0.3M]
Ⓐ	1200680196	884A30K05M006	2.0 FT [0.6M]
Ⓐ	1200680197	884A30K05M010	3 FT 3 IN [1.0M]
Ⓐ	1200680198	884A30K05M050	16FT 5 IN [5.0M]

Ⓐ CABLE LENGTH TOLERANCES
>.3M [1FT]: +19mm-0 [+.75in-0]
.3 - .9M [1 - 3FT]: +44.5mm-0 [+1.75in-0]
.9 - 1.8M [3 - 6FT]: +55.6mm-0 [+2.19in-0]
1.8 - 3.7M [6 - 12FT: +88.9mm-0 [+3.50in-0]
3.7 - 7.3M [12 - 24FT]: +165.1mm-0 [+6.50in-0]
7.3-14.6M [24 - 48FT]: +317.5mm-0 [+12.50in-0]
14.6 - 30.5M [48-100FT]: +622.3mm-0 [+24.50in-0]
OVER 30M [100FT] +2% OF FINISHED LENGTH

FRONT VIEW – MALE INSERT

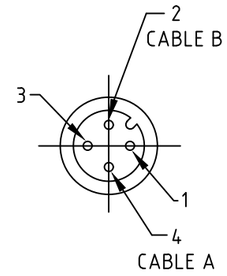

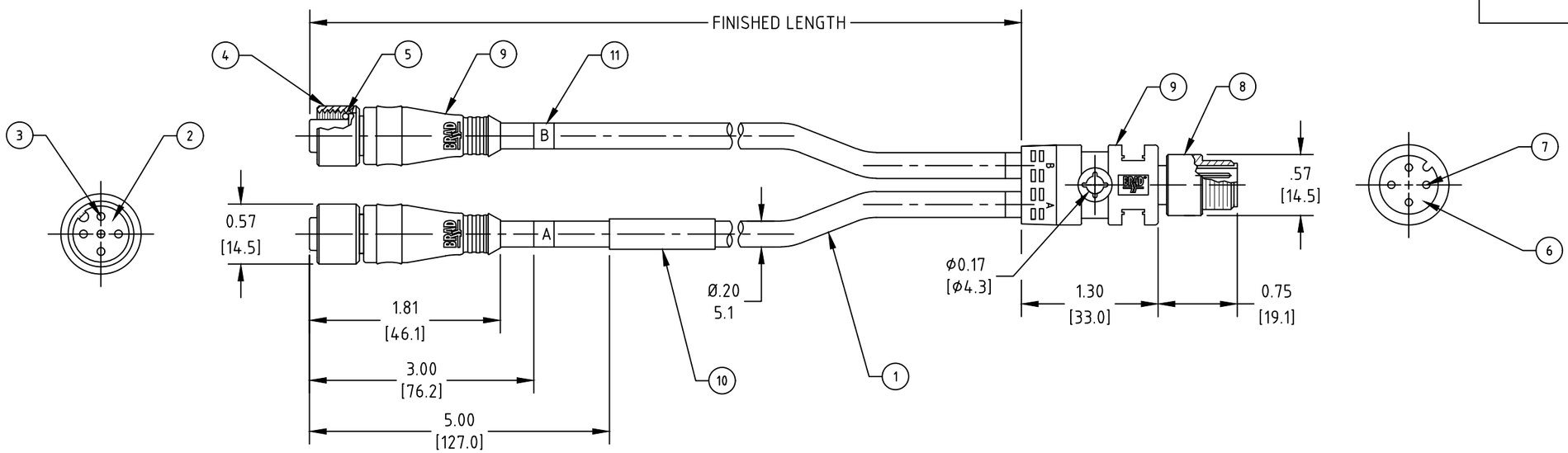

Ⓐ
NOTES:
1. MATERIAL: AS NOTED
2. FINISH: AS NOTED
3. ELECTRICAL:
   VOLTAGE: 250V
   CURRENT: 4A
4. TEMP RATING: -25°C TO +105°C
5. PROTECTION: IP67 (WHEN MATED)
6. COUPLING THREAD: M12 X 1.0
7. UL LISTED FILE: E152210
   CSA CERTIFIED FILE: LR6837
8. ALL DIMS ARE FOR REFERENCE UNLESS TOLERANCED OR NOTED OTHERWISE

ITEM	DESCRIPTION	MATERIAL	FINISH
11	ID LABEL	VINYL	WHITE
10	WRAP LABEL	VINYL	BLACK/YELLOW
9	OVERMOLDS	TPC Ⓐ	YELLOW
8	COUPLING, MALE	BRASS	NI/TFE PLATED
7	CONTACT PIN	COPPER ALLOY	GOLD PLATED
6	MALE INSERT 4P	PUR	BLACK
5	O-RING	VITON	RED
4	COUPLING, FEMALE	BRASS	NI/TFE PLATED
3	CONTACT SOCKET	COPPER ALLOY	GOLD PLATED
2	FEMALE INSERT 3P	PUR	BLACK
1	CABLE, 22/3, PLTC	TPE JACKET	YELLOW

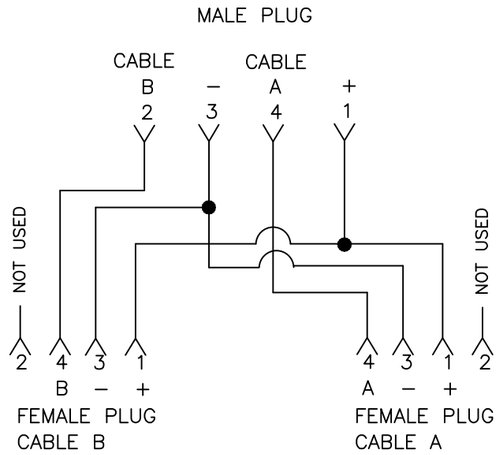

WIRING SCHEMATIC

Ⓐ PART NUMBER LEGEND

884A30K05M010

POLE COUNT

FINISHED LENGTH:
M005= 0.5 METER
M010= 1.0 METER
M100= 10.0 METERS
C300= 30 CENTIMETERS

THIS DRAWING CONTAINS INFORMATION THAT IS PROPRIETARY TO MOLEX ELECTRONIC TECHNOLOGIES, LLC AND SHOULD NOT BE USED WITHOUT WRITTEN PERMISSION

FUNCTIONAL SYMBOLS: FA=0, FC=0, FP=0
DIVISIONAL SYMBOLS

DIMENSION UNITS	SCALE
INCH/MM	1:1

GENERAL TOLERANCES (UNLESS SPECIFIED)

	mm	INCH
4 PLACES	±----	±----
3 PLACES	±----	±----
2 PLACES	±----	±----
1 PLACE	±----	±----
0 PLACES	±----	±----
ANGULAR TOL ±	---- °	

DRAFT WHERE APPLICABLE MUST REMAIN WITHIN DIMENSIONS

CURRENT REV DESC: UPDATE DOC PER LATEST STD. REV'D NOTES, VOLTAGE WAS 300 V, LABEL WAS MYLAR ADD P/NS TO TABLE, ADD LENGTH TOLS, P/N LEGEND, ADD CABLE FLEX INFO, O-MOLD WAS TPE

EC NO: 643415
DRWN: RSTONE 2020/08/11
CHK'D: MZIELINSKI 2020/08/14
APPR: BWOODMAN 2020/08/17

INITIAL REVISION:
DRWN: BBRAUCH 2010/02/15
APPR: NSTAUDIG 2010/02/18

THIRD ANGLE PROJECTION | DRAWING: B-SIZE | SERIES: 120068

molex

MICRO-CHANGE INLINE SPLITTER
4P MALE TO 3P FEMALE STRAIGHT (2X), 22 AWG

PRODUCT CUSTOMER DRAWING

DOCUMENT NUMBER	DOC TYPE	DOC PART	REVISION
SD-120068-026	PSD	001	A

MATERIAL NUMBER	CUSTOMER	SHEET NUMBER
	GENERAL MARKET	1 OF 1

DOCUMENT STATUS	P1	RELEASE DATE	2020/08/17 22:34:10

FORMAT: IN-ACAD-tb-prod-B
REVISION: B
DATE: 2020/01/14

Unikeyic Electronics

Global Electronic Components Distributor

Click to view pricing, inventory, delivery, and lifecycle information:

molex:

0194360214 194290039 194290026 347072012 459850483 502380-0800 528523070 502584-0870 502584-1060 0477256010 197054301 347910140 349672001 355240920 528061110 0464363133 347928042 351820290 357470310 464373005 34708-2028 348242245 503988100 5023860371 528520870 0351510214 194270031 197134001 348268126 502585-0370